LeCroy
Digital Oscilloscopes

WaveRunner 6000 Series
Service Manual

Capture. View. Analyze.

MP MASTER
MA34441

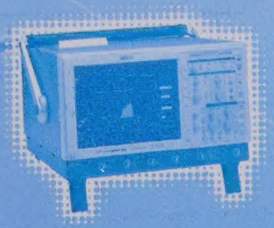

LeCroy

LeCroy Color Digital Oscilloscopes

WaveRunner 6000 Series

Service Manual

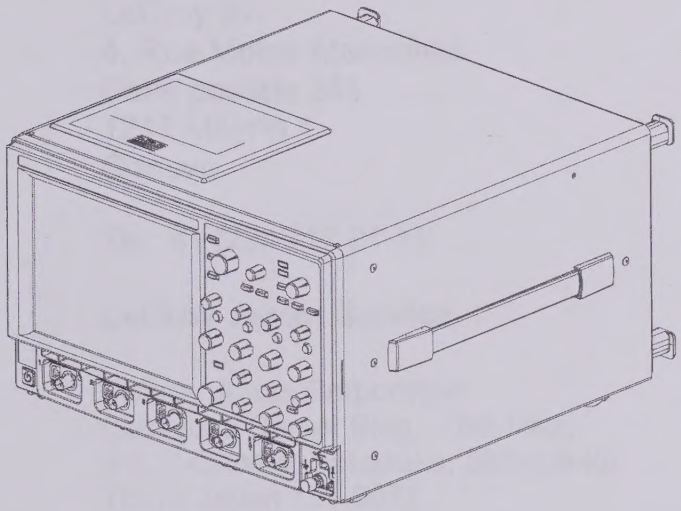

Version B- August 2004

LeCroy

Digitized by the Internet Archive
in 2024

https://archive.org/details/manualsplus_02021

LeCroy Corporate Headquarters

700 Chestnut Ridge Road
Chestnut Ridge, NY 10977-6499
USA

Tel : (845) 425-2000
http://www.lecroy.com

LeCroy European Service

LeCroy SA
4, Rue Moïse Marcinhes
Case postale 341
1217 Meyrin 1
Geneva

Tel : 41 (22) 719-21-11

LeCroy Japan Service

LeCroy Japan Corporation
Sasazuka Center Bldg. – 6th floor,
1-6, 2-Chome, Sasazuka, Shibuya-ku
Tokyo Japan 151-0073

Tel. (81) 3 3376 9400

© 2003 by LeCroy Corporation. All rights reserved.

LeCroy, ActiveDSO, ProBus, SMART Trigger, WavePro, and Waverunner are registered trademarks of LeCroy Corporation. JitterTrack, WaveMaster, and X-Stream are trademarks of LeCroy Corporation. Information in this publication supersedes all earlier versions. Specifications subject to change without notice.

LeCroy

Read this first

Warranty 1-1

1. Warranty and Product Support 1-1
1.2 Product Assistance 1-1
1.3 Maintenance Agreements 1-1
1.4 Staying Up to Date 1-2
1.5 Service and Repair 1-2
1.6 How to return a Product 1-2
1.7 What Comes with Your Scope 1-2

General Information 2-1

2.1 Product Assistance 2-1
2.2 Installation for Safe and Efficient Operation 2-1
Operating Environment 2-1
Safety Symbols 2-1
Power Requirements 2-3
Cleaning and Maintenance 2-3
Power On 2-3

Specifications 3-1

3.1 Vertical System 3-1
3.2 Horizontal System 3-1
3.3 Acquisition System 3-2
3.4 Acquisition Processing 3-2
3.5 Triggering System 3-2
3.6 Basic Triggers 3-3
3.7 SMART Triggers® 3-3
3.8 SMART Triggers with Exclusion Technology 3-3
3.9 Probes 3-3
3.10 Color Waveform Display 3-3
3.11 Analog Persistence Display 3-4
3.12 Zoom Expansion Traces 3-4
3.13 CPU 3-4
3.14 Internal Waveform Memory 3-4
3.15 Setup Storage 3-4
3.16 Interface 3-4
3.17 Auxiliary Input 3-4
3.18 General 3-4
3.19 Environmental 3-5
3.20 Physical Dimensions 3-5
3.21 Certifications 3-5
3.22 Warranty and Service 3-5

Theory of Operation

System Block Diagram		4-1
4.2	Computer	4-2
4.2.1	Operating System	4-2
4.2.2	Memory	4-2
4.2.3	Interfaces	4-2
4.2.4	Storage Devices	4-2
4.2.5	CMOS Settings	4-2
4.3	PCI Card	4-3
4.4	USB Hub	4-3
4.5	Display and Touch Screen	4-4
4.5.1	Color LCD Module	4-4
4.5.2	Inverter	4-4
4.5.3	Touch Screen	4-4
4.6	Acquisition System	4-5
4.6.1	Main Card	4-6
4.6.1.1	JTAG Chains	4-7
4.6.1.2	Serial chains	4-7
4.6.1.3	Controller FPGA	4-8
4.6.1.4	MicroController	4-8
4.6.1.5	Timebase & Trigger	4-9
4.6.1.5.1	HTB645	4-9
4.6.1.5.1.1	Trigger Bandwidth	4-9
4.6.1.5.1.2	Trigger Signal I/O	4-10
4.6.1.5.1.3	TDC	4-10
4.6.1.5.1.4	Timebase	4-10
4.6.1.5.1.5	Miscellaneous clocks	4-10
4.6.1.5.2	MST429A – Smart Trigger IC	4-10
4.6.1.5.2.1	Signal I/O	4-10
4.6.1.5.2.2	Trigger Functions	4-10
4.6.1.5.2.3	Main trigger delay	4-10
4.6.1.5.2.4	Qualifier selection	4-10
4.6.1.5.2.5	Polarity	4-10
4.6.1.5.2.6	Analog Time Measure	4-10
4.6.1.5.2.7	Digital Time Measure	4-10
4.6.1.5.2.8	Trigger Frequency	4-11
4.6.2	ADC & Memory	4-11
4.6.2.1	HAD639	4-11
4.6.2.1.1	Signal I/O	4-11
4.6.2.1.2	ADC's	4-11
4.6.2.1.3	Calibration	4-11
4.6.2.1.4	Control	4-11
4.6.2.2	MAM439	4-12
4.6.2.2.1	Signal I/O	4-12
4.6.2.2.2	Control	4-12
4.6.2.2.3	Decimation	4-12
4.6.2.3	8b/10b Bus	4-12
4.6.3	Front End	4-13

4.6.3.1	Input Coupling	4-13
4.6.3.2	50Ω Path	4-13
4.6.3.3	1MΩ Path	4-14
4.6.3.4	HFE653	4-14
4.6.3.5	Amplifier Signal Path	4-15
4.6.3.5.1	Power Off State	4-15
4.6.3.5.2	50Ω /1 Path	4-16
4.6.3.5.3	50Ω /10 Path	4-16
4.6.3.5.4	1MΩ /1 Path DC Coupled	4-17
4.6.3.5.5	1MΩ /10 Path DC Coupled	4-17
4.6.3.5.6	1MΩ /100 Path DC Coupled	4-18
4.6.3.5.7	1MΩ /1 Path AC Coupled	4-18
4.6.4	Other Sub Systems	4-19
4.6.4.1	Power Supply	4-19
4.6.4.2	NCO (Numerically Controlled Osc.)	4-19
4.6.4.3	10GHz Clock	4-19

Theory of Operation - List of Figures

Figure 4-1 WaveRunner 6000 Block Diagram	4-1
Figure 4-2 Device Manage	4-3
Figure 4-3 Acquisition Main Board Block Diagram	4-5
Figure 4-4 JTGA Device Chains	4-7
Figure 4-5 Serial Bus Device Chains	4-8
Figure 4-6 Trigger and Timebase Block Diagram	4-9
Figure 4-7 ADC and Memory Block Diagram	4-11
Figure 4-8 8b/10b Path	4-12
Figure 4-9 Front End Card Block Diagram	4-13
Figure 4-11 Front End Power Off State Block Diagram	4-15
Figure 4-10: HFE653 Block Diagram	4-15
Figure 4-12 50Ω /1 Path Block Diagram	4-16
Figure 4-13 50Ω /10 Path Block Diagram	4-16
Figure 4-14 1MΩ /1 Path DC Coupled Block Diagram	4-17
Figure 4-15 1MΩ /20 Path DC Coupled Block Diagram	4-17
Figure 4-16 1MΩ /20 Path DC Coupled Block Diagram	4-18
Figure 4-17 1MΩ /1 Path AC Coupled Block Diagram	4-18
Figure 4-18 Cal Clock Block Diagram	4-19

Performance Verification

5.1	Introduction	5-1
5.1.1	List of Tested Characteristics	5-1
5.1.2	Calibration Cycle	5-1
5.2	Test Equipment Required	5-2
5.2.1	Test Records	5-2
5.3	Turn On	5-2
5.4	Input Impedance	5-3
5.4.1	Channel Input Impedance	5-3
5.4.2	External Trigger Input Impedance	5-6
5.5	Leakage Current	5-7
5.5.1	Channel Leakage Current	5-7
5.5.2	External Trigger Leakage Current	5-10
5.6	Peak-Peak Noise Level	5-12
5.6.1	5 GS/s 50 Ohm	5-12
5.6.2.	10 GS/s Channel Mode (WR6100 & WR6200 only)	5-14
5.7	DC Accuracy	5-17
5.7.1	Positive 50Ω DC Accuracy	5-17
5.7.2	Negative 50Ω DC Accuracy	5-20
5.7.1	Positive 1MΩ DC Accuracy	5-21
5.7.2	Negative 1MΩ DC Accuracy	5-23
5.8	Offset Accuracy	5-25
5.8.1	Positive 50Ω Offset Accuracy	5-25
5.8.2	Negative 50Ω Offset Accuracy	5-27
5.8.3	Positive 1MΩ Offset Accuracy	5-28
5.8.4	Negative 1MΩ Offset Accuracy	5-30
5.9	Bandwidth	5-31
5.9.1	Description	5-31
5.10	Trigger Level	5-36
5.10.1	Description	5-36
5.10.2	Channel Trigger at 0 Division Threshold	5-36
5.10.3	Channel Trigger at +2.5 Divisions Threshold	5-38
5.10.4	Channel Trigger at –2.5 Divisions Threshold	5-39
5.11	Time Base Accuracy	5-41
5.11.1	Description	5-41
5.11.2	10 GHz Clock Verification Procedure	5-41

Maintenance

6.	Maintenance	6-1
6.1	Introduction	6-1
6.1.1	Safety Precautions	6-1
6.1.2	Anti-static Precautions	6-1
6.2	Disassembly and Assembly Procedure	6-2
6.2.1	Disassembly Procedure	6-2
a.	Removal of the Upper Cover Assembly	6-2
b.	Opening of the Front Bezel	6-2
c.	Removal of the Acquisition System Assembly	6-3
d.	Removal of the PCI Board	6-4
e.	Removal of the AGP-DVO Interface Board	6-4
f.	Removal of the Processor Board	6-4
g.	Removal of the Hard Disk Drive	6-5
h.	Removal of the CD ROM Drive	6-5
i.	Removal of the Power Supply	6-6
j.	Removal of the Front Frame Assembly	6-6
k.	Removal of the Front Panel Encoder Board	6-7
l.	Removal of the USB Hub Board	6-7
m.	Removal of the Display Inverter Board	6-8
n.	Removal of the Display and Touchscreen	6-8
o.	Replacing the Battery	6-9
	Assembly Procedure	6-10
6.2.2	Installing Hardware Options	6-11
6.3	Software Update Procedure	6-11
6.3.1	Installing New X-Stream DSO Application Software	6-11
6.3.2	Software End User License Agreement	6-12
6.3.3	Installing Device Drivers	6-17
6.3.4	Upgrading Microcode	6-18
6.3.5	Verifying Microcode	6-19
6.3.6	Restoring the Operating System	6-19
6.3.7	Software Options	6-21
6.3.7.1	Changing Software Option Key	6-21
a.	Scope ID, Scope Serial Number	6-21
b.	Entering Option Key in the DSO	6-21
6.4	Board Exchange Procedure	6-22
6.4.1	Processor Board Exchange Procedure	6-22
6.4.2	Hard Drive Replacement Procedure	6-22
6.5	Equipment and Spare Parts Recommended for Service	6-23
6.5.1	Test Equipment Required	6-23
6.5.2	WaveRunner Spare Parts	6-23
6.6	Service Menu	6-24
6.6.1	Accessing Service Menu	6-24
6.6.2	Mainframe Tests	6-25
6.6.2.1	Front Panel Test	6-25
6.6.2.2	Critical File Backup	6-27
6.6.3	Acquisition System Tests	6-28
6.6.3.1	Critical Acquisition System Component Temperatures	6-28

6.6.3.2 Automatic Calibrations 6-29
6.7 Calibration Procedures 6-30
6.7.1 System Power Supply Calibration Procedure 6-30
6.7.2 Touch Screen Calibration Procedure 6-34
6.8 Troubleshooting and Flow Charts 6-37
6.8.1 Introduction 6-37
6.8.2 Repair Level 6-37
6.8.3 Initial Troubleshooting 6-38
6.8.4 Power Supply Problem 6-40
6.8.5 No Display (Internal or External) 6-43
6.8.6 Internal Display Problem 6-44
6.8.7 Boot Up Sequence 6-45
6.8.8 Front Panel Controls Do not Operate 6-46
6.8.9 Touch Screen Problems 6-47
6.8.10 Timebase Problem 6-49
6.8.11 Remote Control Problem 6-50
6.8.12 CD-ROM Problem 6-51
6.8.13 Vertical Accuracy Problem 6-52

1. Warranty and Product Support

It is recommended that you thoroughly inspect the contents of the oscilloscope packaging immediately upon receipt. Check all contents against the packing list/invoice copy shipped with the instrument. Unless LeCroy is notified promptly of any missing or damaged item, responsibility for its replacement cannot be accepted. Contact your nearest LeCroy Customer Service Center or national distributor immediately (see chapter 2 for *contact numbers*).

1.1 Warranty

LeCroy warrants its oscilloscope products for normal use and operation within specifications for a period of three years from the date of shipment. Calibration each year is recommended to ensure in-spec. performance. Spares, replacement parts and repairs are warranted for 90 days. The instrument's firmware has been thoroughly tested and is thought to be functional, but is supplied without warranty of any kind covering detailed performance. Products not made by LeCroy are covered solely by the warranty of the original equipment manufacturer.

Under the LeCroy warranty, LeCroy will repair or, at its option, replace any product returned within the warranty period to a LeCroy authorized service center. However, this will be done only if the product is determined after examination by LeCroy to be defective due to workmanship or materials, and not to have been caused by misuse, neglect or accident, or by abnormal conditions or operation.

1.2 Product Assistance

Note: *This warranty replaces all other warranties, expressed or implied, including but not limited to any implied warranty of merchantability, fitness, or adequacy for any particular purpose or use. LeCroy shall not be liable for any special, incidental, or consequential damages, whether in contract or otherwise. The client will be responsible for the transportation and insurance charges for the return of products to the service facility. LeCroy will return all products under warranty with transport prepaid.*

Help on installation, calibration, and the use of LeCroy equipment is available from the LeCroy Customer Service Center in your country.

1.3 Maintenance Agreements

LeCroy provides a variety of customer support services under Maintenance Agreements. Such agreements give extended warranty and allow clients to budget maintenance costs after the initial three-year warranty has expired. Other services such as installation, training, enhancements, on-site repairs and calibrations are available through special supplemental support agreements.

1.4 Staying Up to Date

LeCroy is dedicated to offering state-of-the-art instruments, by continually refining and improving the performance of LeCroy products. Because of the speed with which physical modifications may be implemented, this manual and related documentation may not agree in every detail with the products they describe. For example, there might be small discrepancies in the values of components affecting pulse shape, timing or offset, and — infrequently — minor logic changes. However, be assured the scope itself is in full order and incorporates the most up-to-date circuitry. LeCroy frequently updates firmware and software during servicing to improve scope performance, free of charge during warranty. You will be kept informed of such changes, through new or revised manuals and other publications.

Nevertheless, you should retain this, the original manual, for future reference to your scope's hardware specifications.

1.5 Service and Repair

Please return products requiring maintenance to the Customer Service Department in your country or to an authorized service facility. The customer is responsible for transportation charges to the factory, whereas all in-warranty products will be returned to you with transportation prepaid. Outside the warranty period, you will need to provide us with a purchase order number before we can repair your LeCroy product. You will be billed for parts and labor related to the repair work, and for shipping.

1.6 How to return a Product

Contact the nearest LeCroy Service Center or office to find out where to return the product. All returned products should be identified by model and serial number. You should describe the defect or failure, and provide your name and contact number. In the case of a product returned to the factory, a Return Authorization Number (RAN) should be used.

Return shipments should be made prepaid. We cannot accept COD (Cash On Delivery) or Collect Return shipments. We recommend air-freighting.

It is important that the RAN be clearly shown on the outside of the shipping package for prompt redirection to the appropriate LeCroy department.

1.7 What Comes with Your Scope

Refer to chapter 10 for a list of the items that ships standard with the different configurations of this oscilloscope.

***Note:** Wherever possible, please use the original shipping carton. If a substitute carton is used, it should be rigid and packed so that that the product is surrounded by a minimum of four inches or 10 cm of shock-absorbent material.*

2. General Information

2.1 Product Assistance

Help on installation, calibration, and the use of LeCroy equipment is available from your local LeCroy office, or from LeCroy's

- Customer Care Center, 700 Chestnut Ridge Road, Chestnut Ridge, New York 10977–6499, U.S.A., tel. (845) 578–6020
- European Service Center, 4, Rue Moïse Marcinhes, Case postale 341, 1217 Meyrin 1, Geneva Switzerland, tel. (41) 22/719 21 11.
- LeCroy Japan Corporation, Sasazuka Center Bldg – 6th floor, 1-6, 2-Chome, Sasazuka, Shibuya-ku, Tokyo Japan 151-0073, tel. (81) 3 3376 9400

2.2 Installation for Safe and Efficient Operation

Operating Environment

The oscilloscope will operate to its specifications if the environment is maintained within the following parameters:

Temperature.....5 to 40 °C (41 to 104 °F) rated.

Humidity.....Maximum relative humidity 80 % RH (non-condensing) for temperatures up to 31 °C decreasing linearly to 50 % relative humidity at 40 °C

Altitude.....2000 m (6560 ft)

The oscilloscope has been qualified to the following EN61010-1 category:

Installation (Overvoltage) Category.....II

Pollution Degree..... 2

Safety Symbols

Where these symbols or indications appear on the front or rear panels, and in this manual, they have the following meanings:

CAUTION: Refer to accompanying documents (for Safety-related information). *See elsewhere in this manual wherever the symbol is present,as indicated in the Table of Contents.*

CAUTION: Risk of electric shock

On (Supply)

Off (Supply)

Earth (Ground) Terminal

Protective Conductor Terminal

Earth (Ground) Terminal on BNC Connectors

WARNING **Denotes a hazard. If a WARNING is indicated on the instrument, do not proceed until its conditions are understood and met.**

Any use of this instrument in a manner not specified by the manufacturer may impair the instrument's safety protection.

The oscilloscope has *not* been designed to make direct measurements on the human body. Users who connect a LeCroy oscilloscope directly to a person do so at their own risk.

3. Specifications

3.1 Vertical System

	WaveRunner 6030(A)	WaveRunner 6050(A)	WaveRunner 6051(A)	WaveRunner 6100(A)	WaveRunner 6200(A)
Nominal Analog Bandwidth @ 50 Ω (-3 dB)	350 MHz	500 MHz	500 MHz	1 GHz	2 GHz
Rise Time (Typical)	1 ns	750 ps	750 ps	400 ps	225 ps
Input Channels	4	4	2	4	4
Bandwidth Limiters	20 MHz; 200 MHz				
Input Impedance	1MΩ//<20pF (10 MΩ // 9.5pF using PP007 probe)				
Input Coupling	50 Ω: DC, 1MΩ: AC, DC, GND				
Maximum Input Voltage, 50Ω	50 Ω: 5 Vrms, 1 MΩ: 250 V max (Peak AC: ≤ 10 kHz + DC)				
Channel to Channel Isolation	>40dB @ <100MHz (>30dB @ full bandwidth)				
Vertical Resolution	8 bits; up to 11 with enhanced resolution (ERES)				
Sensitivity	50 Ω: 2 mV/div - 1 V/div fully variable; 1 MΩ: 2 mV - 10 V/div fully variable				
DC Gain Accuracy	±1.0% of full scale (typical); ±1.5% of full scale ≥ 10mV/div (warranted)				
Offset Range	50 Ω: ± 400 mV @ 2-4.99 mV/div ± 1 V @ 5-100 mV/div ± 10 V @ 102 mV/div - 1V/div 1 MΩ: ± 500 mV @ 2-4.99 mV/div ± 1 V @ 5-100 mV/div ± 10 V @ 102 mV/div - 1V/div ± 100 V @ 1.02V/div - 10V/div				
Offset Accuracy	±(1.5% + 0.5% of offset value + 1 mV) all fixed gain < 2V/div ±(1.5% + 1.0% of offset value + 1 mV) all variable and V/div settings ≥ 2V/div				
Probing System	BNC or Probus®				

3.2 Horizontal System

Timebases	Internal timebase common to all input channels; an external clock may be applied at the auxiliary input
Time/Division Range	20 ps/div - 10 s/div
Math & Zoom Traces	4 independent zoom and 4 math/zoom traces standard
Clock Accuracy	≤ 5 ppm @ 25° C (≤ 10ppm @ 5-40° C)
Time Interval Accuracy	Clock Accuracy + Jitter Noise Floor
Sample Rate & Delay Time Accuracy	Equal to Clock Accuracy
Trigger & Interpolator Jitter (RMS)	≤ 3 ps rms (typical)
Channel to Channel Deskew Range	±9 x T/div setting, 100ms max, each channel
External Sample Clock	DC to 1 GHz; 50 Ω (limited BW in 1MΩ), BNC input, limited to 2 Ch operation (1 Ch in WR6051), (minimum rise time and amplitude requirements apply at low frequencies)
Roll Mode	User selectable, Available at lower time/div settings

3.3 Acquisition System

	WaveRunner 6030(A)	WaveRunner 6050(A)	WaveRunner 6051(A)	WaveRunner 6100(A)	WaveRunner 6200(A)
Single-Shot Sample Rate/Ch	2.5 GS/s	5 GS/s	5 GS/s	5 GS/s	5 GS/s
Interleaved Sample Rate (2 Ch)	5 GS/s	N/A	N/A	10 GS/s	10 GS/s
Random Interleaved Sampling (RIS)	200 GS/s				
Trigger Rate	125,000 waveforms/second				
Sequence Time Stamp Resolution	1 ns				
Minimum time Between Sequential Segments	8 µs				
Acquisition Memory	Max. Acquisition Points (4ch/2ch; 2ch/1ch in 6051)			Segments (Sequence Mode)	
Standard	1M / 2M			500	
Option S (Std for A models)	2M / 4M			500	
Option M	4M / 8M			1,000	
Option L	8M/16M			5,000	
Option VL	12M/24M			10,000	

3.4 Acquisition Processing

	WaveRunner 6030(A)	WaveRunner 6050(A)	WaveRunner 6051(A)	WaveRunner 6100(A)	WaveRunner 6200(A)
Time Resolution (min, Single-shot)	200 ps (5 GS/s)			100 ps (10 GS/s)	
Averaging	Summed and continuous averaging to 1 million sweeps				
ERES	From 8.5 to 11 bits vertical resolution				
Envelope (Extrema)	Envelope, floor, and roof for up to 1 million sweeps				
Interpolation	Linear, Sinx/x				

3.5 Triggering System

Trigger Modes	Normal, Auto, Single, Stop
Sources	Any input channel, External, Ext/10, or Line; slope and level unique to each source
Trigger Coupling	DC50 Ω, GND, DC1MΩ, AC1MΩ
Pre-trigger delay	0-100% of memory size (adjustable in 1% increments, or 100 ns)
Post-trigger delay	The smaller of 0 to 10,000 divisions or 86,400 seconds
Hold-off	2 ns to 20 s or 1 to 99,999,999 events
Internal trigger level range	±5 div from center (typical)

	WaveRunner 6030(A)	WaveRunner 6050(A)	WaveRunner 6051(A)	WaveRunner 6100(A)	WaveRunner 6200(A)
Trig Sensitivity (Edge Trigger)	2 div@350 MHz	2 div@500 MHz	2 div@500 MHz	2 div@1 GHz	2 div@2 GHz
CH 1-4 + ext	1 div@250 MHz	1 div@350 MHz	1 div@350 MHz	1 div@750 MHz	1 div@1.8 GHz
Max Trig Freq with SMART Trigger®	350 MHz	500 MHz	500 MHz	750 MHz	750 MHz
CH 1-4 + ext	@ ≥ 10mV	@ ≥ 10mV	@ ≥ 10mV	@ ≥ 10mV	@ ≥ 10mV
Trigger Level DC Accuracy	±4% full scale ±2mV (typical)				
External trigger range	EXT/10 ±4V; EXT ±400mV				

3.6 Basic Triggers

Edge/Slope/Line	Triggers when signal meets slope (positive or negative) and level condition

3.7 SMART Triggers®

State or Edge Qualified	Triggers on any input source only if a defined state or edge occurred on another input source .
	Delay between sources is selectable by time or events.
Dropout	Triggers if signal drops out for longer than selected time between 2 ns and 20 s.
Pattern	Logic combination (AND, NAND, OR, NOR) of 5 inputs (4 channels and external trigger input - 2ch+EXT on 6051). Each source can be high, low, or don't care.
	The high and low level can be selected independently. Triggers at start or end of the pattern.

3.8 SMART Triggers® with Exclusion Technology

Glitch & Pulse Width	Triggers on positive or negative glitches with widths selectable from 600 ps to 20 s or on intermittent faults. (Subject to bandwidth limit of oscilloscope).
Signal or Pattern Width	Triggers on positive or negative pulse widths selectable from 600 ps to 20 s or on intermittent faults. (Subject to bandwidth limit of oscilloscope).
Signal or Pattern Interval	Triggers on intervals selectable between 2 ns and 20 s.
Timeout (State/Edge Qualified)	Triggers on any source if a given state (or transition edge) has occurred on another source.
	Delay between sources is 10ns to 20 s, or 1 to 99,999,999 events.
Exclusion Triggering	Trigger on intermittent faults by specifying the normal width or period.
Automatic Setup	
Auto Setup	Automatically sets timebase, trigger, and sensitivity to display a wide range
Vertical Find Scale	Automatically sets the vertical sensitivity and offset for the selected channels to display

3.9 Probes

Probes	One PP007 per channel standard; Optional passive and active probes available
Probe System; Probus	Automatically detects and supports a variety of compatible probes
Scale Factors	Automatically or manually selected, depending on probe used

3.10 Color Waveform Display

Type	Color 8.4" flat-panel TFT-LCD with high resolution touch screen
Resolution	SVGA; 800 x 600 pixels
Real Time Clock	Dates, hours, minutes, seconds displayed with waveform. Accurate to ±50ppm. SNTP support to synchronize to precision internet clocks.
Number of Traces	Display a maximum of 8 traces. Simultaneously display channel, zoom, memory, and math traces.
Grid Styles	Auto, Single, Dual, Quad, Octal, XY, Single + XY, Dual + XY
Waveform Styles	Sample dots joined or dots only

3.11 Analog Persistence Display

Analog & Color-Graded Persistence	Variable saturation levels; stores each trace's persistence data in memory.
Persistence Selections	Select analog, color, or three-dimensional.
Trace Selection	Activate persistence on all or any combination of traces.
Persistence	Aging Time Select from 500 ms to infinity.
Sweeps Displayed	All accumulated, or all accumulated with last trace highlighted.

3.12 Zoom Expansion Traces

Zoom Expansion Traces	Display up to 4 Math/Zoom traces;

3.13 CPU

Processor	Intel Celeron® 2 GHz or better.
Processing Memory	256 MB on Std & M option; 512 MB with L option & VL option
Operating System	Microsoft Windows® 2000 Professional (XP Professional "A" model)

3.14 Internal Waveform Memory

	M1, M2, M3, M4 Internal Waveform Memory (store full-length waveform with 16 bits/data point) or store to any number of files limited only by data storage media

3.15 Setup Storage

Front Panel and Instrument Status	Store to the internal hard drive, over the network, or to a USB-connected peripheral device.

3.16 Interface

Remote Control	Via Windows Automation, or via LeCroy Remote Command Set
GPIB Port (Optional)	Supports IEEE - 488.2
Ethernet Port	10/100Base-T Ethernet interface (RJ-45 connector)
USB Ports	5 USB ports (one on front of instrument) supports Windows-compatible devices
External Monitor Port	Standard 15-pin D-Type SVGA-compatible DB-15; connect a second monitor to use dual-monitor display mode.
Parallel Port	Standard DB-25
Serial Port	DB-9 RS232 port (not for remote oscilloscope control)

3.17 Auxiliary Input

Signal Types	Selected from External Trigger or External Clock input on front panel
Coupling	50 Ω: DC, 1MΩ: AC, DC, GND
Maximum Input Voltage	50 Ω: 5Vrms, 1MΩ: 250 Vmax (Peak AC; ≤ 10 Khz + DC)

3.18 Auxiliary Output

Signal Types	Trigger Enabled, Trigger Output, Pass/Fail, or Off
Output Level	TTL, ~3.3 V
Connector Types	BNC, located on rear panel

3.19 General

Auto Calibration	Ensures specified DC and timing accuracy is maintained for 1 year minimum
Power	100-240 Vrms (±10%) at 50/60 Hz; 100-120 Vrms (±10%) at 400 Hz Automatic AC Voltage Selection
	Installation Category: 300V CAT II; Max. Power Consumption: 425 VA/425 W

3.20 Environmental

Temperature: Operating	+5°C to 40°C
Temperature: Non-Operating	-20°C to +60°C
Humidity: Operating	5% to 80% RH (non-condensing) up to 30°C, Upper limit derates linearly to 50% RH (non-condensing) at 40°C
Humidity: Non-Operating	5% to 95% RH (non-condensing) as tested per MIL-PRF-28800F
Altitude: Operating	3,048m (10,000 ft) max at ≤ 25°C
Altitude: Non-Operating	12,190m (40,000 ft)

3.21 Physical Dimensions

Dimensions (HWD)	211mm x 355mm x 363mm (excluding feet) 8.3" x 13.8" x 14.3"
Net Weight	10 kg (22 lb), excluding printer
Shipping Weight	less than 13.6 kg (30 lb)

3.22 Certifications

CE Approved, UL and cUL listed; Conforms to EN 61326-1, EN 61010-1, UL 3111-1, and CSA C22.2 No. 1010.1

3.23 Warranty and Service

3-year warranty; calibration recommended annually. Optional service programs include extended warranty, upgrades, calibration, and customization services

This page intentionally left blank

4. Theory of Operation

4.1 System Block Diagram

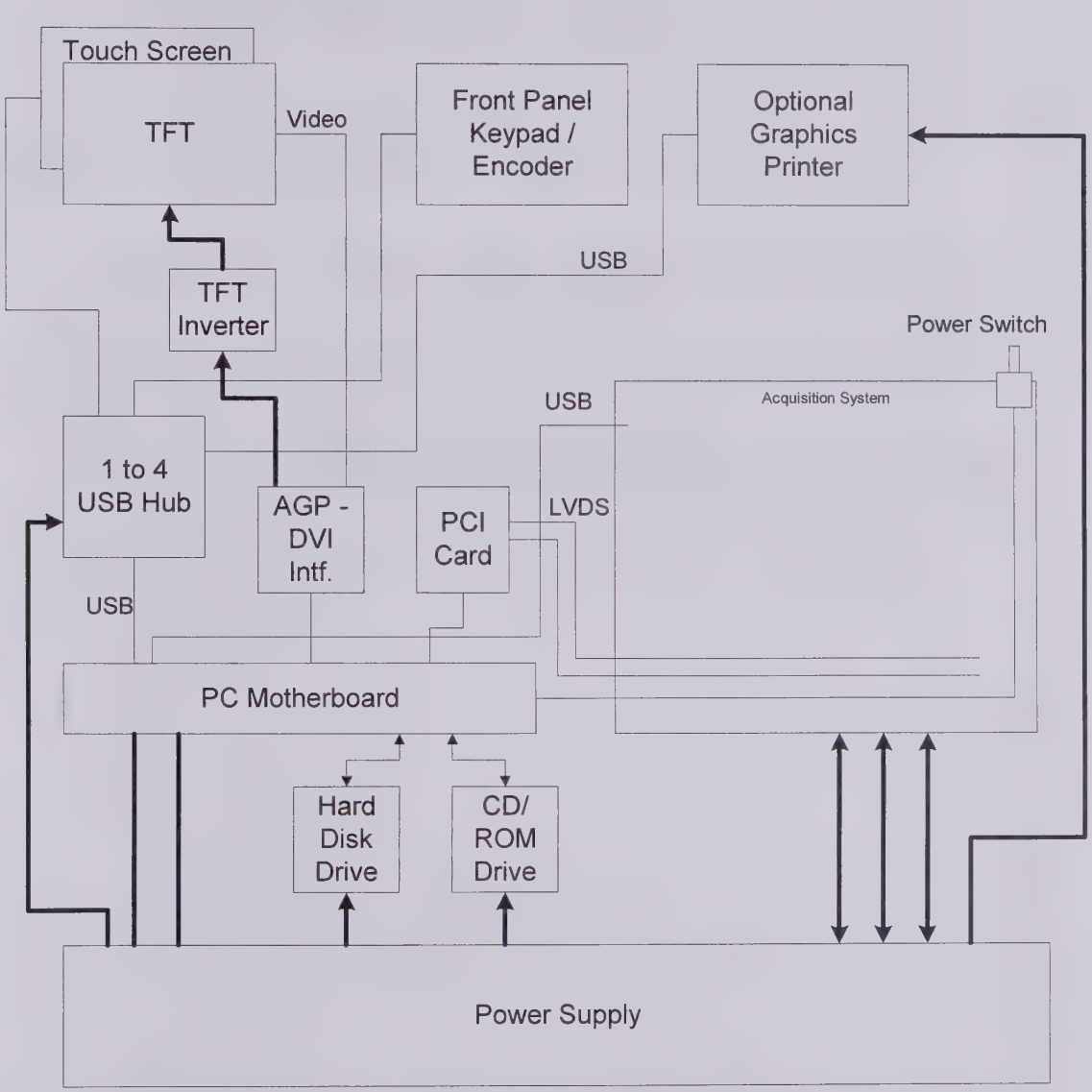

Figure 4-1 WaveRunner 6000 Block Diagram

4.2 **Computer** – The WaveRunner 6000 processor is a 1.7 GHz or 2.0 GHz Intel Celeron motherboard or better. This assembly will change more often than other assemblies due to the volatility of PC motherboards.

4.2.1 **Operating System** – The system uses Microsoft Windows 2000 as the operating system. The operating system license can be found on the rear panel of the instrument.

4.2.2 **Memory** – The standard memory configuration for a WaveRunner 6000 is 256MB, consisting of 1 piece of 32M x72 Bit PC2100 SDRAM DIMM. If option L or VL is installed into the acquisition system then the processor RAM needs to be 512MB.

4.2.3 **Interfaces** – The standard interfaces provided by the PC Motherboard are SVGA, Audio, Ethernet, RS-232, Centronics and USB. .

4.2.4 **Storage Devices** – The system has an internal hard drive of at least 40 GB in size. 5 GB is allocated for LeCroy use, the balance is in a user partition for the saving of panel setups, waveform memory, hard copies, application programs, user data, etc. The system also includes a CD-ROM drive. The CD-ROM drive requires an adapter PCA to provide the interconnection to the ribbon cable which makes connection to the motherboard.

4.2.5 **CMOS Settings** – The BIOS version is locked so that the System recovery CD will only work on WaveRunner 6000 scope. Changes can still be made to BIOS settings if needed, the lock is only relevant to the use of the System Recovery CD.

4.3 **PCI Card** - The PCI card is the interface between the PCI bus on the processor card and the acquisition system. It has the following interfaces:

- PCI card acts as a transaction repeater
- LVDS link between PCI card and Acquisition system
- PCI card also contains buzzer and unique chip ID.
- All digital functions (PCI and LVDS interface) contained in a Xilinx Spartan IIe
- Two Beeps at powerup indicates link is good
- PCI card can also be detected with device manager

4.4 **USB Hub** – The USB Hub is a 1 to 4 USB 1.1 Interface. Only three USB are actually created however the HUB interface chip is capable of making four USB ports. One of the ports connects to the Touch Screen Controller, one port is available for an internal graphics printer and the third port is for the front panel processor. The USB Hub is recognized by Windows as a Generic USB Hub.

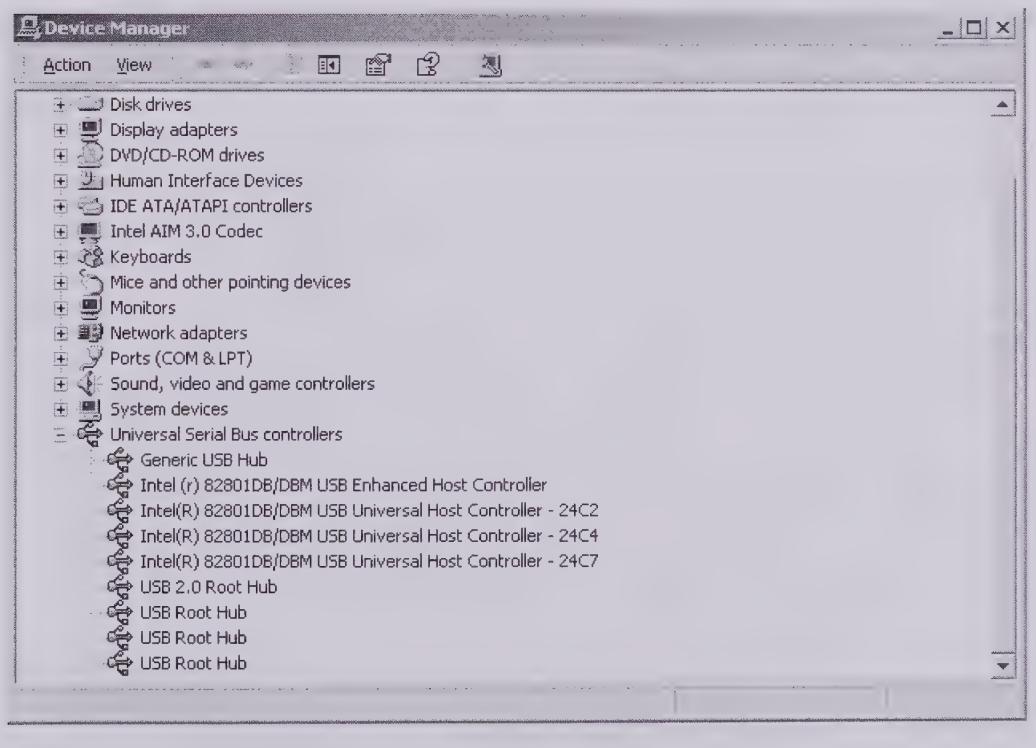

Figure 4-2 Device Manager

4.5 Display and Touch Screen

4.5.1 **Color LCD Module** – The display module is an NEC TFT (thin film transistor) active matrix color liquid crystal display (LCD) module comprising amorphous silicon TFT attached to each signal electrode, a driving circuit and a backlight. The 22cm diagonal display area contains 800x600 pixels (SVGA) and can display 262144 colors simultaneously.

4.5.2 **Inverter** – The inverter which supplies power to the TFT is supplied with +12V from the DVI card DVO/DVI processor, it then converts this to 1000-2000V AC to drive the TFT. The intensity control is kept at a constant 100%, dimming is not possible.

4.5.3 **Touch Screen** – The touch screen is a 4 wire resistive touch screen. It must be calibrated so that software can determine where a touch corresponds to a position on the screen. This calibration is done at five points and can be invoked through the Utilities menu.

4.6 Acquisition System –

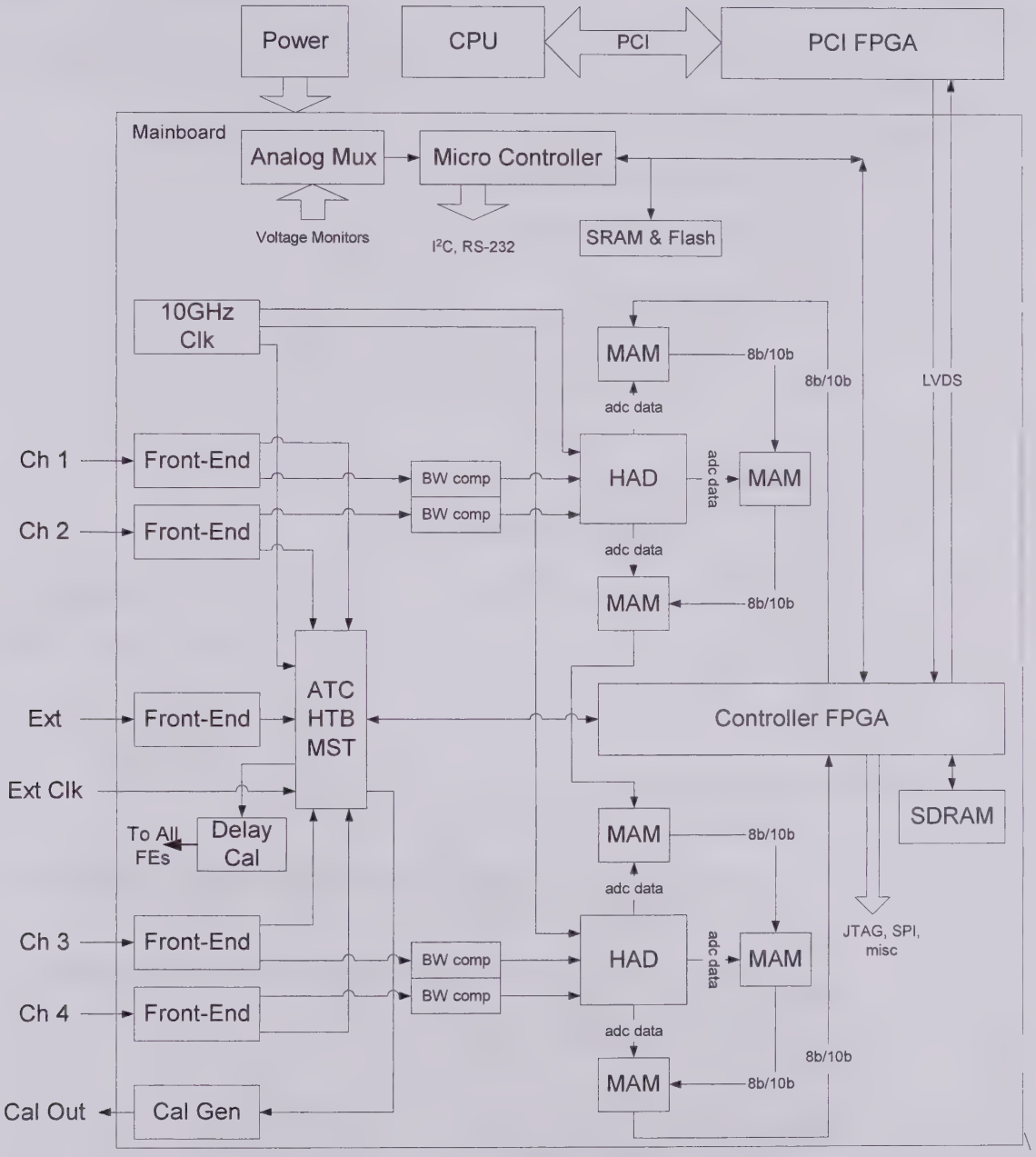

Figure 4-3 Acquisition Main Board Block Diagram

4.6.1 Main Card –

- Receives +12V, -12V, +3.3V, -3.3V, +5V, -5V, and "line sync" from Bulk AC power supply.

- Other I/O:
  - BNC Channel and External inputs
  - Probus
  - Trigger out/pass fail BNC (rear panel)
  - USB (pass thru)
  - Power Switch (pass thru)
  - Arm and Trigger LED (to front panel)
  - Calibrator Output (front panel probe hook)
  - External Clock Input through External BNC

- Sub systems
  - FE (50 Ohm, 1M Ohm)
  - ADC and Acquisition Memory
  - Timebase and Trigger
  - 10GHz clock
  - Controller FPGA
  - uP Controller
  - Power Supply
  - NCO
  - Probus

- Communication with devices
  - SPI
    - Slow Serial interface (2MHz). Used for communication with DACs, HFEs and FE control, NCO.
  - JTAG
    - Serial Interface for communicating with HTB, ADCs, and MAMs.
  - 8B/10B Gigabit Ethernet
    - Acqusition memory (MAM) readout
  - I2C
    - Probus
  - Parallel Interface
    - uC to Controller FPGA
  - GPIO
    - 16 bit general purpose I/O

4.6.1.1 JTAG Chains

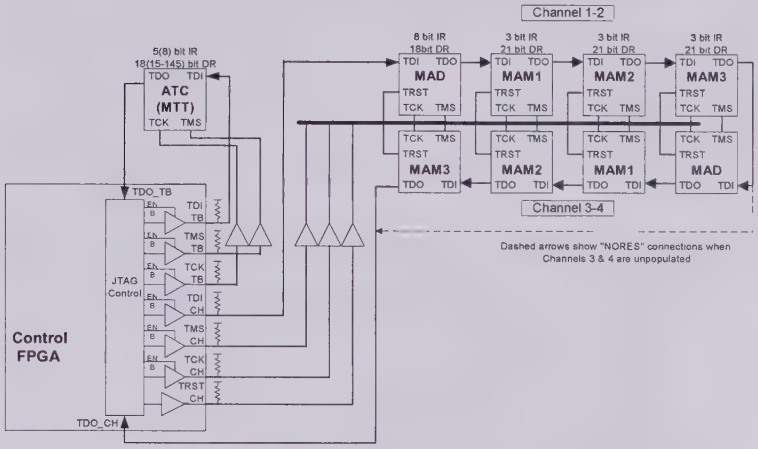

Figure 4-4 JTGA Device Chains

The software detects the devices on JTAG chain at startup

4.6.1.2 Serial chains

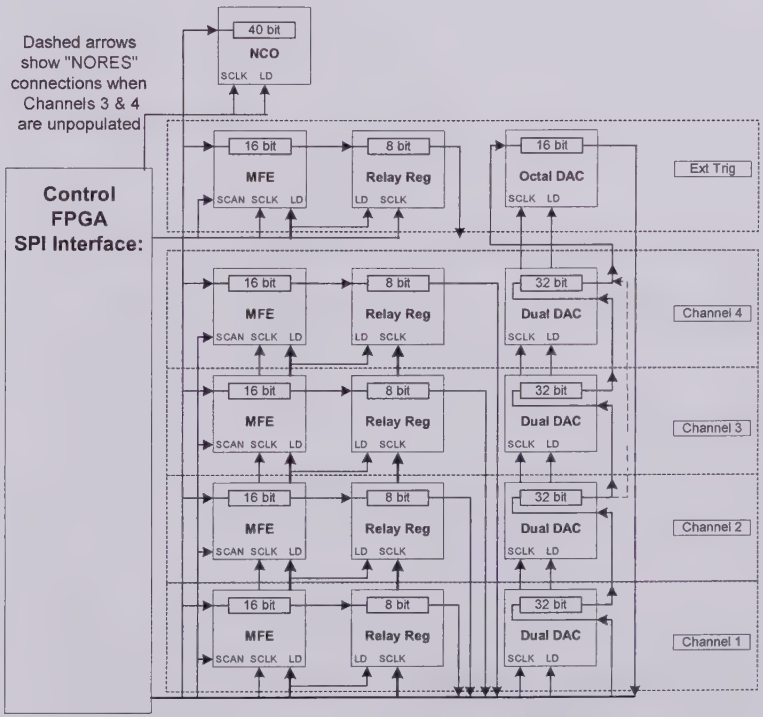

Figure 4-5 Serial Bus Device Chains

4.6.1.3 Controller FPGA

- Handles Communication to PCI card thru LVDS Link
- uC Interface
- GPIO Interface Controller
- JTAG Interface Controller
- SPI Interface Controller
- Time Stamp SDRAM Controller

4.6.1.4 MicroController

- Handles programming of Xilinx FPGAs on Acquisition Board (to Spartan IIe devices)
- Provides Scanning ADC for Monitoring:
    - Chip temperatures of ADC, MAMs, FE, HTB
    - System temperature
    - Bulk power supplies
    - Probus ring voltages
    - Channel overload protection
- Probus Communication via I2C
- RS232 Interface for programming FLASH (internal use only)

4.6.1.5 Timebase & Trigger

- Comprised of ATC FPGA, HTB645, MST429, SDRAM
- Trigger Threshold
- Generates many system clocks (125MHZ, 500MHz from 10GHz)
- Handles Starting and Stopping of ADCs and Memory
- Counters for pre and post trigger
- TDC for waveform trigger position
- Fanout for External Clock
- Smart Trigger
- Sequence Mode (Time stamp stored in SDRAM)

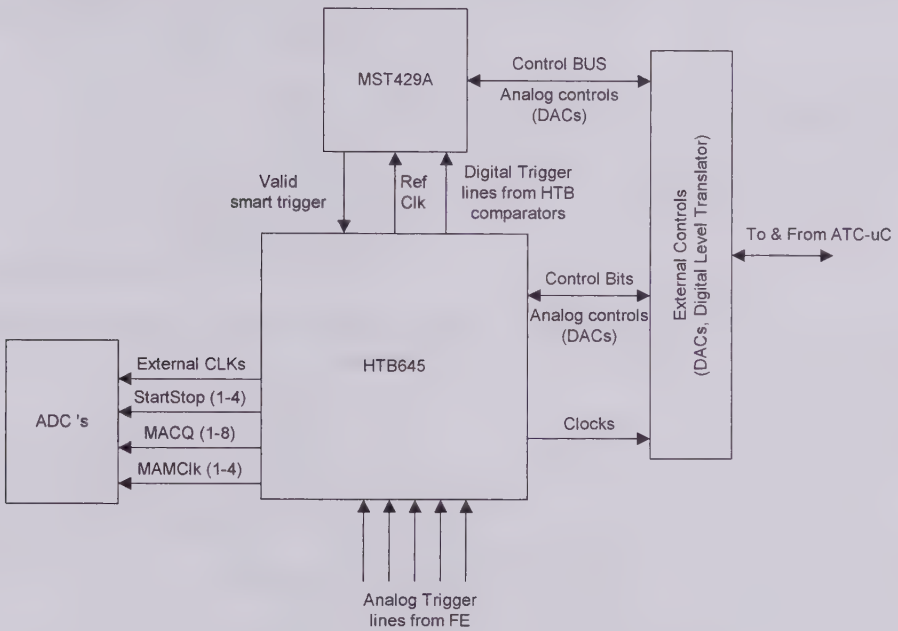

Figure 4-6 Trigger and Timebase Block Diagram

4.6.1.5.1 **HTB645** – Hybrid Timebase Trigger IC which performs all standard triggers and control of individual acquisitions by the ADC and Memory system.

4.6.1.5.1.1 **Trigger Bandwidth** – The trigger bandwidth of the system using standard triggers is 5 GHz.

4.6.1.5.1.2 **Trigger Signal I/O** – There are five differential trigger inputs, five differential trigger comparator outputs to be used by an external Smart Trigger IC, five analog trigger level threshold control lines, five analog trigger hysteresis control lines (they are all connected together in this implementation), five trigger selection lines and a validate trigger input from the smart trigger.

4.6.1.5.1.3 **TDC** – The HTB645 has an internal TDC and the ability to drive an external TDC. The TDC resolution is ≈1.4ps.

4.6.1.5.1.4 **Timebase** – Provides control of starting and stopping individual acquisition segments.

4.6.1.5.1.5 **Miscellaneous clocks** – provides 125MHz clock for the NCO and the probe cal generator.

4.6.1.5.2 **MST429A** – Smart Trigger IC

4.6.1.5.2.1 **Signal I/O** – there are 6 differential ECL trigger inputs, 6 differential ECL validate inputs and 2 single ended ECL inputs

4.6.1.5.2.2 **Trigger Functions**

- edge trigger
- timeout trigger
- pulse width trigger
- interval width trigger
- setup and hold time violation trigger

4.6.1.5.2.3 **Main trigger delay or holdoff selection**

- trigger delayed by time
- trigger holdoff by time
- trigger delayed by events
- trigger delayed by events and time
- trigger holdoff by events and time
- trigger delayed by time and events

4.6.1.5.2.4 **Qualifier selection**

- gate qualifier
- state qualifier
- edge qualifier
- number of events qualifier
- state with specified delay qualifier
- edge with restartable delay qualifier
- edge with not restartable delay qualifier
- pulse width qualifier
- interval width qualifier

4.6.1.5.2.5 **Polarity** – Polarity selection for trigger and qualifier (positive, negative or either)

4.6.1.5.2.6 **Analog Time Measure** – Analog time measure system used for specific trigger and qualifier from 500ps to 10ns with 250ps resolution, and from 10ns to 100ns with 500ps resolution

4.6.1.5.2.7 **Digital Time Measure** – Digital time measure system used for specific trigger and qualifier

from 100ns to about 70s with 2ns resolution (clock reference at 500 MHz)

4.6.1.5.2.8 **Trigger Frequency** – Main trigger frequency up to 750 MHz, Qualifier frequency up to 500 MHz

4.6.2 ADC & Memory - The ADC function is performed by a two dual channel 5 GS/s, 8 Bit ADC hybrids (HAD639) with 24 Megabytes of DRAM. They have an 8b/10b data link to transfer data to an off board processor. For each pair of channels (1&2 and 3&4) there is an 8 Bit Hybrid ADC and three 8 Megabyte DRAM IC's (MAM439). The ADC can be used either as a dual acquisition channel, or it may be used as part or a two channel system to interleave data to achieve a 10GS/s sampling rate

- Controlled via JTAG
- ADCs sample at 5GS/s for 4CH and 10GS/s when Interleaved to 2CH
- Digitized Data Decimated to achieve other sample rates
- Digitized data stored in MAMs and read out over 8b/10b bus
- Gain, Offset and Delay Dacs
- PRBS Generator

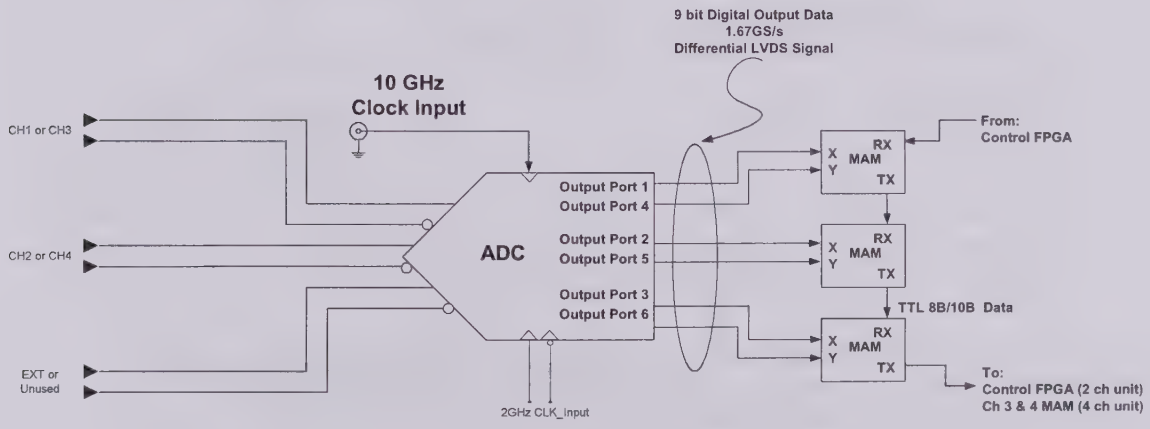

Figure 4-7 ADC and Memory Block Diagram

4.6.2.1 **HAD639** – 10 GS/s, 8 Bit ADC

4.6.2.1.1 **Signal I/O** – The HAD639 has three differential analog inputs and six output ports that each have nine differential output signals and two differential quadrature clock outputs.

4.6.2.1.2 **ADC's** – There are six 8 bit ADC's in this device. Each ADC operates at a clock speed of 1.667 GHz.

4.6.2.1.3 **Calibration** – There are several DAC's built into the HAD639 to calibrate its ADC's. For each ADC there are five internal DAC's, one for gain, one for offset, one for delay, one for output delay and one for sample delay.

4.6.2.1.4 **Control** – The operating mode of the ADC is controlled through JTAG, the control of each acquisition, start, stop etc is controlled by the HTB.

4.6.2.2 **MAM439** - 8 Megabytes DRAM

4.6.2.2.1 **Signal I/O** – The MAM439 has two, nine bit differential inputs, each with two differential quadrature clock inputs. Output is through an 8B/10B Ethernet transceiver.

4.6.2.2.2 **Control** – The state of MAM is controlled through JTAG and through the Gigabit Ethernet link, the control of each acquisition, clock, reset, stop etc is controlled by the HTB.

4.6.2.2.3 **Decimation** – When the sample rate is below 10GS/s, the MAM439 ignores or decimates the correct amount of samples so that the desired sample rate is achieved. The ADC always digitizes at 10 GSs.

4.6.2.3 8b/10b Bus

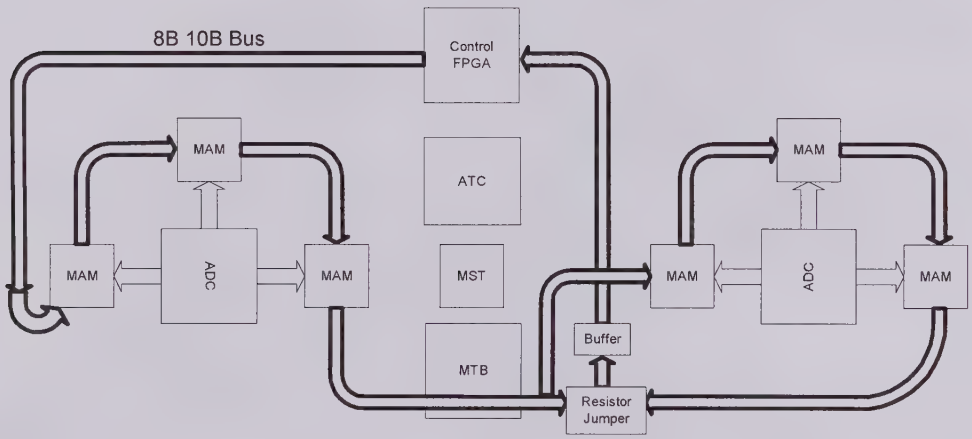

Figure 4-8 8b/10b Path

4.6.3 **Front End** – the front ends contain the attenuators, calibration signals and offset generation, and signal conditioning of the input signal. It outputs are differential analog signals used by the ADC's and trigger circuitry.

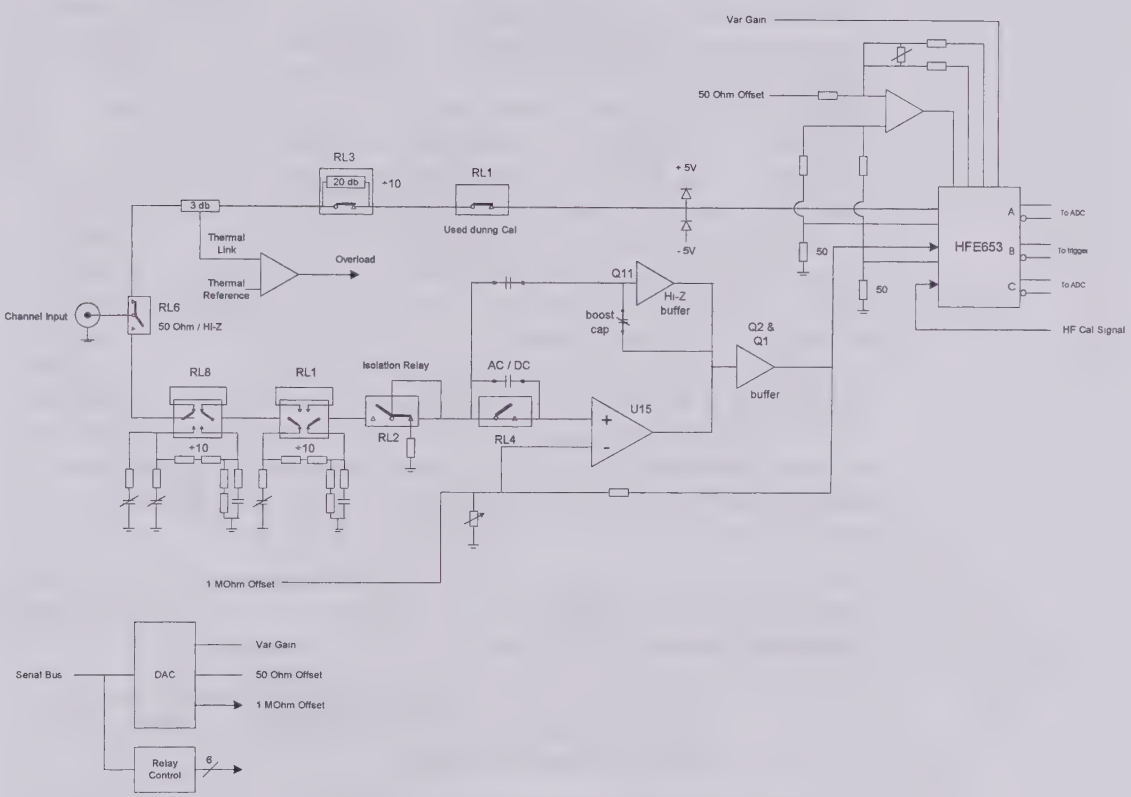

Figure 4-9 Front End Card Block Diagram

4.6.3.1 **Input Coupling** – There are two paths through the front end card. One is the high bandwidth (350 MHz to 2 GHz) 50Ω path , the other is the lower bandwidth (350 or 500 MHz) high impedance path which can be either DC or AC coupled. The path is determined by relay RL7.

4.6.3.2 **50Ω Path** – The 50Ω path has a 3db attenuator right after the input to limit the current into the front end from overload and then there are clamp diodes to protect the HFE653. There is a thermal link from the 3db attenuator to a diode which is used to sense an overloaded input by the heat dissipated by the 3db attenuator There is a switch able 20db attenuator (RL3) which is used for range settings of greater than 100mv/div. The input signal passes through the input to the HFE and is terminated with a 50Ω resistor on the front end card.

4.6.3.3 **1MΩ Path** – The Hi-Z path has a switchable 20db attenuator (RL8) which is used at input range settings of ≥ 102 mV/div. There are two adjustable capacitors C4 & C25 in this attenuator circuit, C25 is used to adjust the pulse shape when the 20db attenuator is switched in and C4 is used to adjust the input capacitance of the channel so that it is the same when the 20db attenuator is not switched in. After the /10 attenuator there is a second /10 attenuator which is additionally switched in at input range settings of ≥1.02 V/div. C59 is used to adjust the pulse shape when this attenuator is switched in. The signal then passes through RL6 which is used to terminate the input to the Hi-Z amplifier when 50Ω coupling is selected. Next the input signal splits and follows two paths, DC and high frequency. In the block diagram above, the upper path in the high impedance amplifier is the high frequency stage and lower path is the DC stage. The DC stage is preceded by RL4 which selects DC or AC coupling. R38 is used to match the transfer functions of the high frequency and low frequency path so that a square pulse shape can be obtained. The adjustable cap C85 is used to provide additional drive for the high-Z buffer and increase the bandwidth. The output of the buffer is then fed to the HFE653 and this input is also terminated with a 50Ω resistor on the front end card.

4.6.3.4 **HFE653** – The HFE653 monolithic amplifier is the primary component comprising the high bandwidth 50Ohm amplifier. The HFE provides the following functions:

4.6.3.4.1 Gain control on inputs based on the sensitivity settings of the DSO, so as to provide a 500mVpp differential signal at the output of the amplifier.

4.6.3.4.2 Provide the capability to choose from three input channels.

4.6.3.4.3 Using a serial chain control to

- Select one of the three input channels
- Choose either BW limit filter path or the full BW path
- Turn ON and OFF any output amplifiers
- Provide a read back capability to read the latch states and the device revision code.

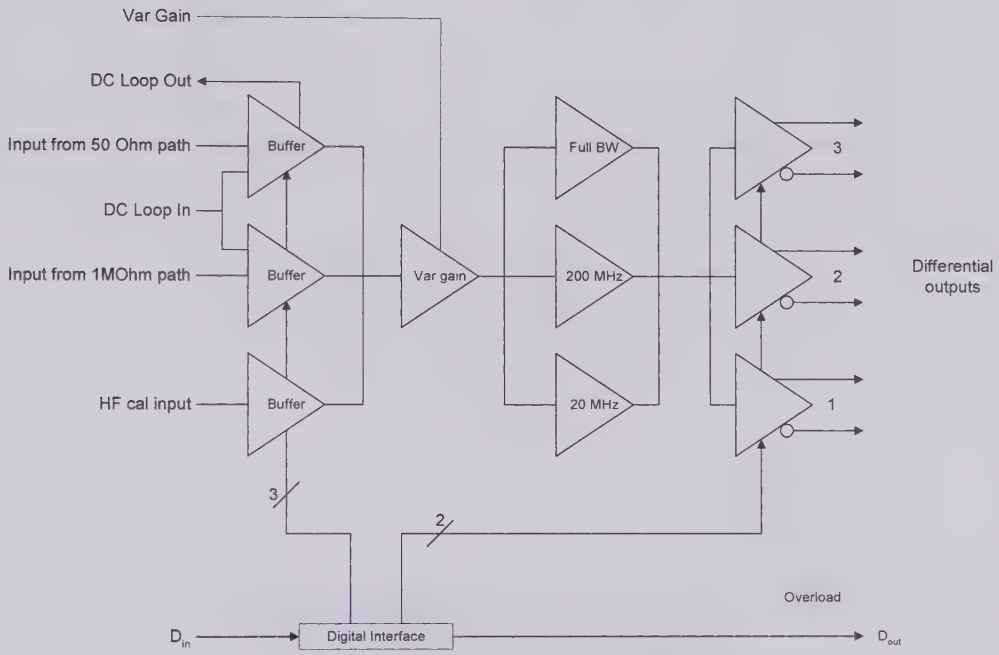

Figure 4-10: HFE653 Block Diagram

4.6.3.5 **Amplifier Signal Path** – The following diagrams illustrate the signal path taken during the various different scope input coupling and input attenuation modes:

4.6.3.5.1 **Power Off State –**

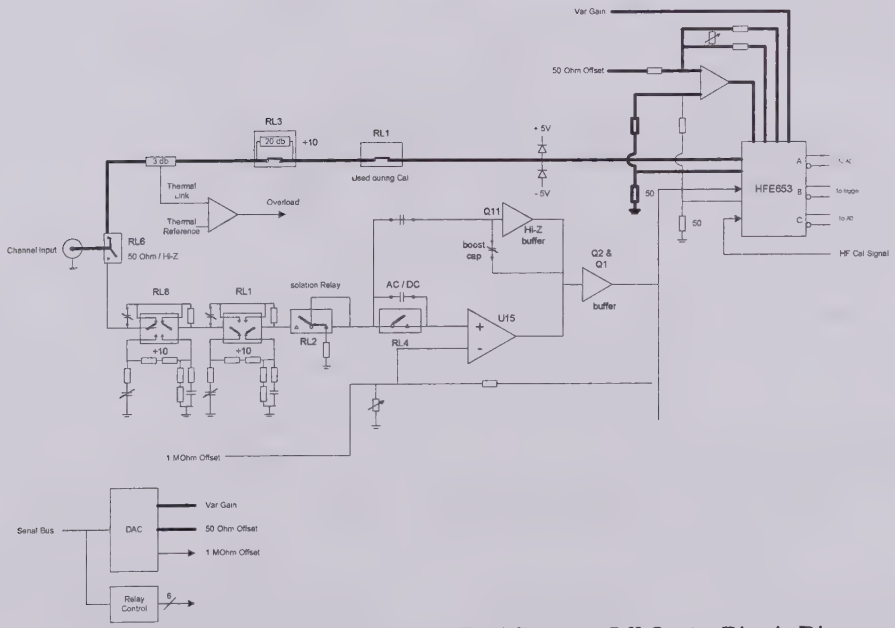

Figure 4-11 Front End Power Off State Block Diagram

4.6.3.5.2 50Ω /1 Path –

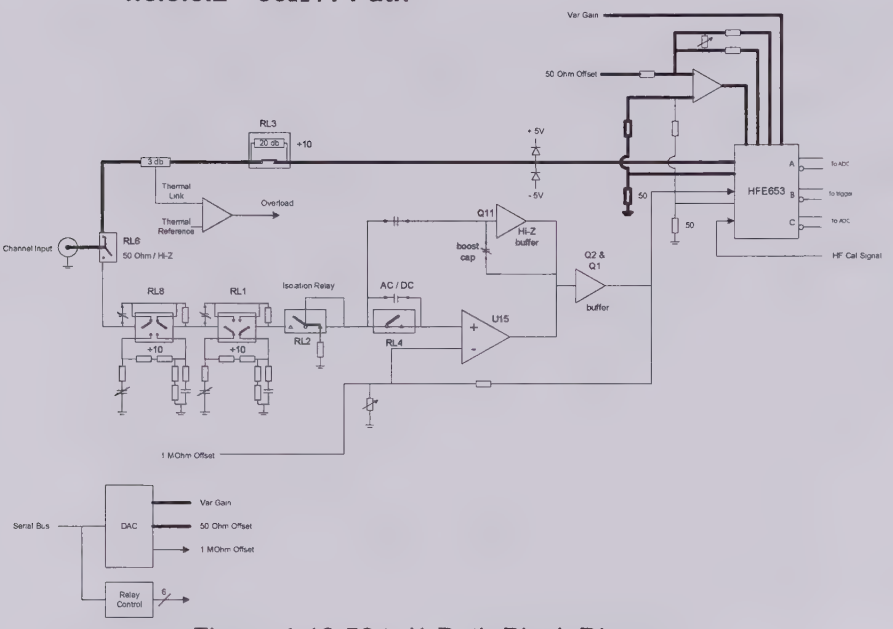

Figure 4-12 50Ω /1 Path Block Diagram

4.6.3.5.3 50Ω /10 Path –

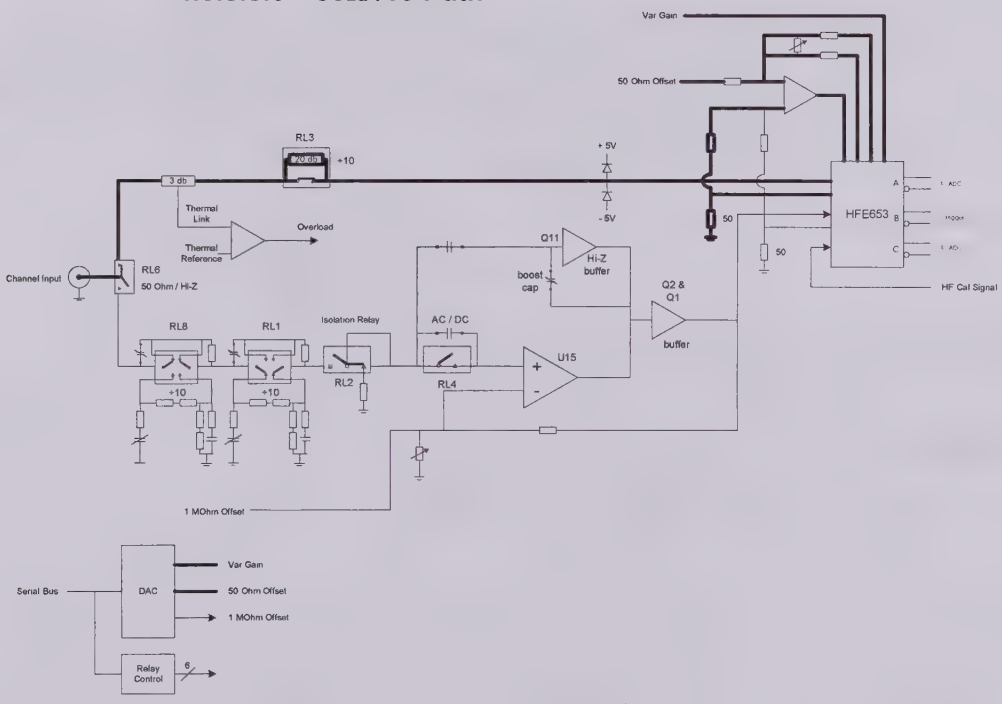

Figure 4-13 50Ω /10 Path Block Diagram

4.6.3.5.4 1 MΩ /1 Path DC Coupled –

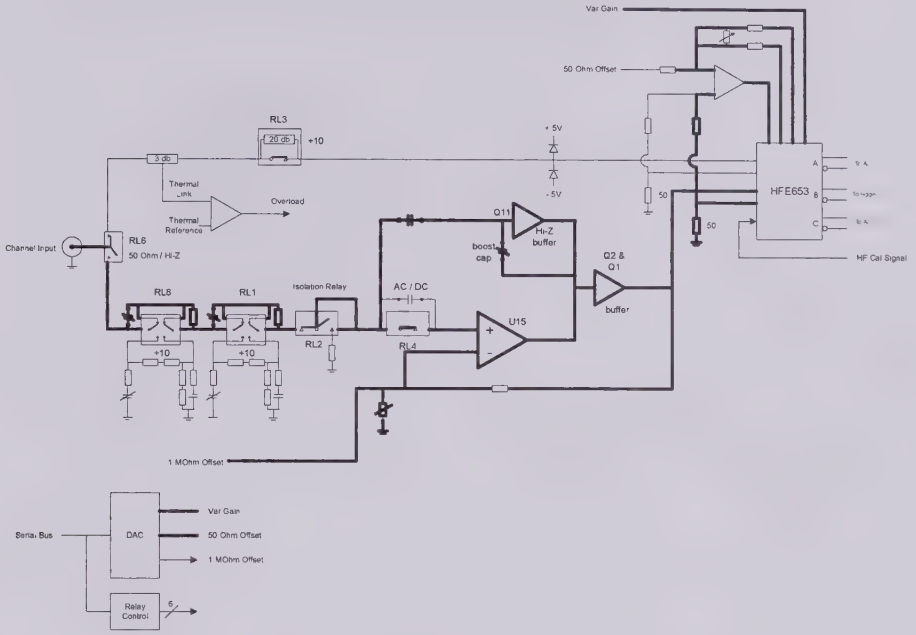

Figure 4-14 1MΩ /1 Path DC Coupled Block Diagram

4.6.3.5.5 1 MΩ /10 Path DC Coupled –

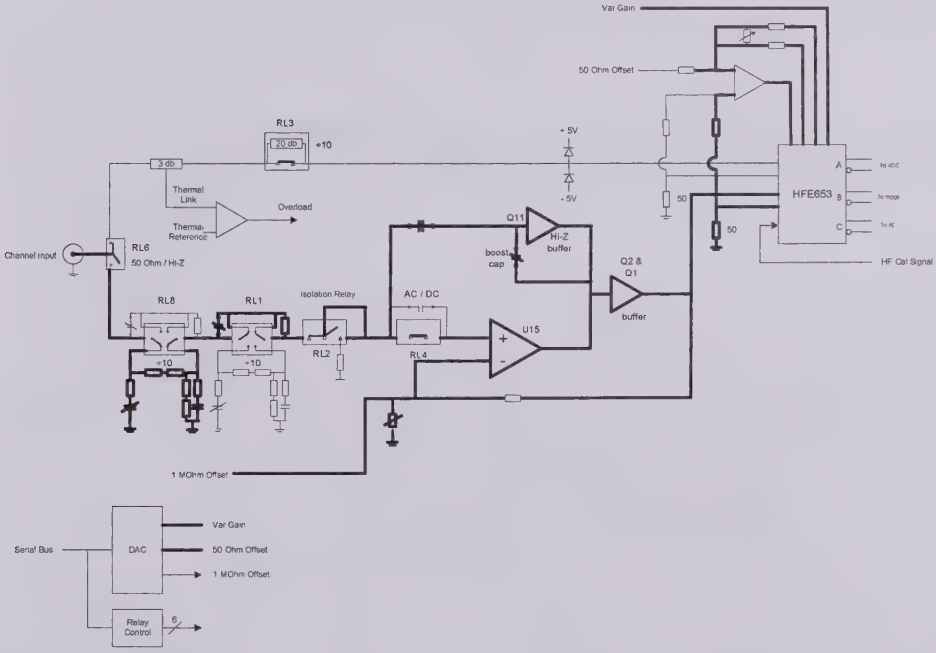

Figure 4-15 1MΩ /20 Path DC Coupled Block Diagram

4.6.3.5.6 1 MΩ /100 Path DC Coupled –

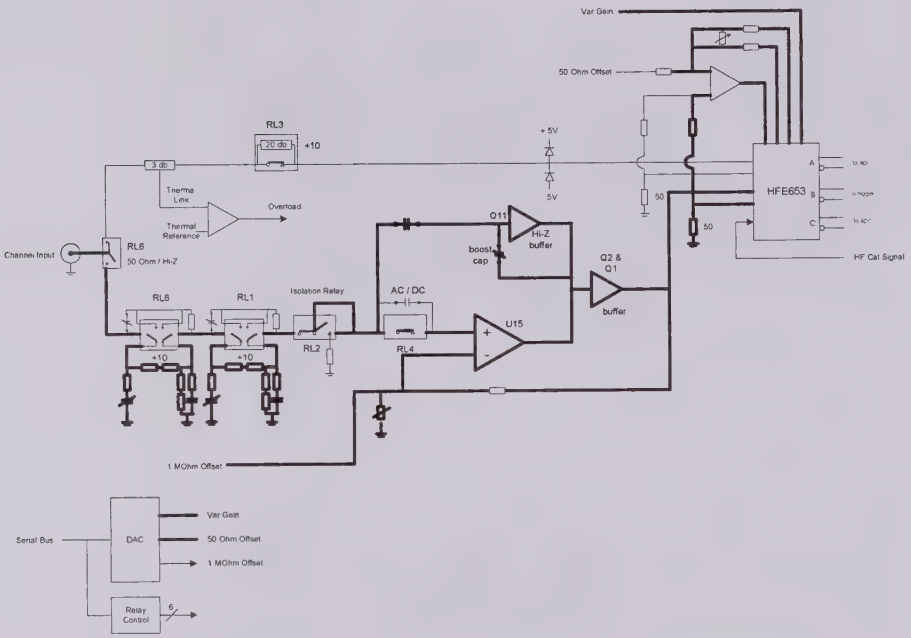

Figure 4-16 1MΩ /20 Path DC Coupled Block Diagram

4.6.3.5.7 1 MΩ /1 Path AC Coupled –

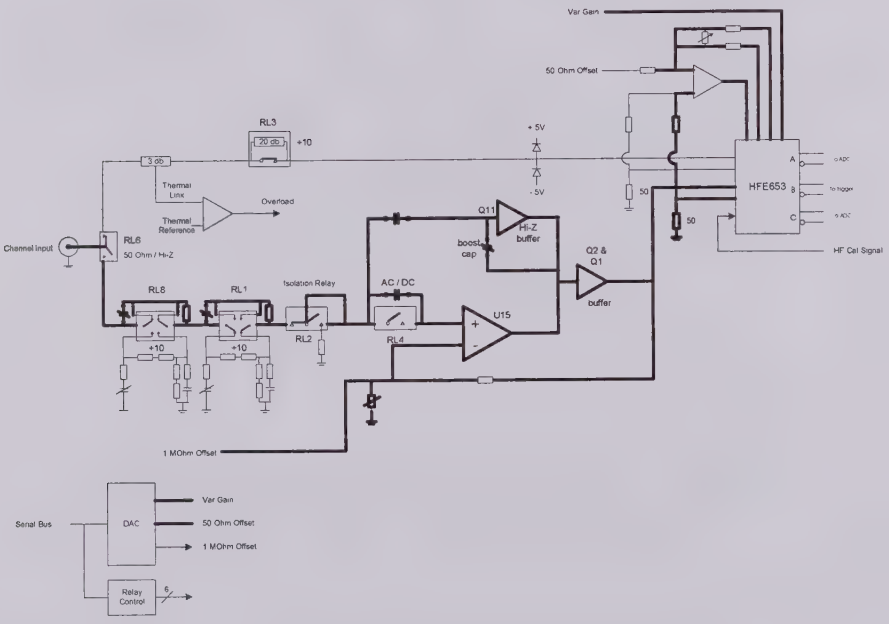

Figure 4-17 1MΩ /1 Path AC Coupled Block Diagram

4.6.4 Other Sub Systems

4.6.4.1 Power Supply

- Filtered and Linear regulated supplies

4.6.4.2 NCO (Numerically Controlled Osc.)

- Provides calibration signal to FEs for ADC calibration and External clock calibration

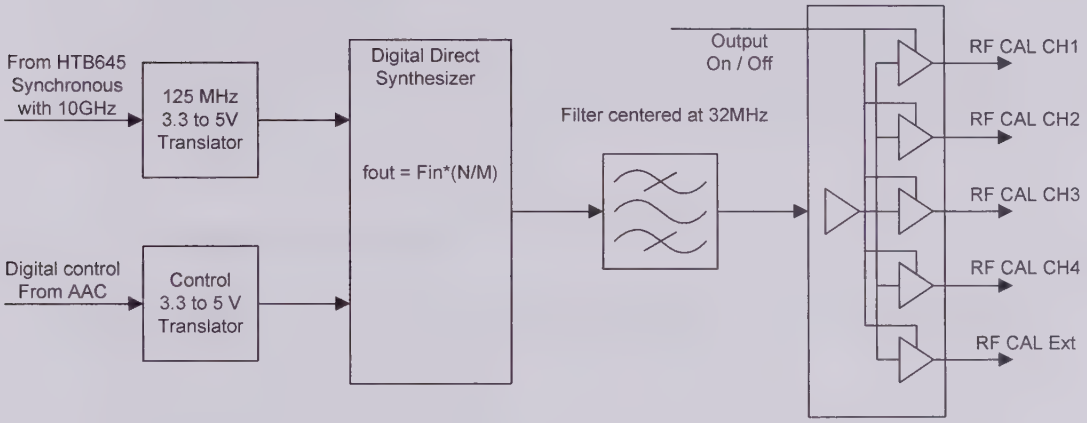

Figure 4-18 Cal Clock Block Diagram

4.6.4.3 10GHz Clock

- Generates 10GHz system clock from 10MHz oscillator. 10GHz piped thru system using semi-flex (ADCs and HTB)

This page intentionally left blank

5. Performance Verification

5.1 Introduction

This chapter contains procedures suitable for determining if the WaveRunner 6000 Series,VBA6050, VBA6100 and LSA1225 Digital Storage Oscilloscope performs correctly and as warranted. They check all the characteristics listed in subsection 5.1.1.

In the absence of the computer automated calibration system based on LeCroy Calibration Software (Calsoft), this manual performance verification procedure can be followed to establish a traceable calibration. It is the calibrating entities' responsibility to ensure that all laboratory standards used to perform this procedure are operating within their specifications and traceable to required standards if a traceable calibration certificate is to be issued for the WaveRunner 6000 Digital Storage Oscilloscope.

5.1.1 List of Tested Characteristics

This subsection lists the characteristics that are tested in terms of quantifiable performance limits.

- Input Impedance
- Leakage Current
- Peak to Peak noise level
- Positive and Negative DC accuracy
- Positive and Negative Offset
- Bandwidth
- Trigger Accuracy
- Time Base Accuracy

5.1.2 Calibration Cycle

The WaveRunner 6000 Digital Storage Oscilloscope requires periodic verification of performance. Under normal use (2,000 hours of use per year) and environmental conditions, this instruments calibration cycle is 12 months.

5.2 Test Equipment Required

These procedures use external, traceable signal generators, DC precision power supply and digital multi-meter, to directly check specifications.

Instrument	Specifications	Recommended
Signal Generator Radio Frequency	Frequency : .5 MHz to 3 GHz Frequency Accuracy : 1 PPM	HP8648B/C, Fluke 9500 or equivalent
Signal Generator Audio Frequency	Frequency : 0 to 5 kHz Amplitude : 8 V peak to peak	HP33120A or equivalent
Voltage Generator DC Power Supply	Range of 0 to 20 V, in steps of no more than 15 mV	HP6633A or equivalent
Power Meter + Sensor	Accuracy ±1 %	HP437B + 8482A or equivalent
Digital Multimeter Volt & Ohm	Voltmeter Accuracy : 0.1 % Ohmmeter Accuracy : 0.1 %	Keithley 2000 or equivalent
Coaxial Cable, 5 ns	50Ω, BNC, length 100 cm,	
Coaxial Cable, 5 ns	50Ω, SMA, length 100 cm,	
2 Attenuators, 20 dB	50Ω, BNC, 1 % accuracy	
T adapter	50Ω, BNC T adapter	

Table 5-1 : Test Equipment

5.2.1 Test Records

The last pages of this document contain WaveRunner 6000 series test records in the format tables. Keep them as masters and use a photocopy for each calibration.

5.3 Turn On

If you are not familiar with operating the WaveRunner 6K series, refer to the operator's manual.

- Switch on the power using the power switch.
- Wait for about 20 minutes for the scope to reach a stable operating temperature:
- Insert the CD with panel setups

5.4 Input Impedance

Specifications

DC 50Ω ±1.5 %
EXT DC 50Ω ±1.5 %
DC 1MΩ ±1.25%

The impedance values for 50Ω coupling are measured with a high precision digital multimeter. The DMM is connected to the DSO in 4 wire configuration (input and sense), allowing for accurate measurements. **Check that the DMM used is measuring the 1 MΩ inputs in at least a 3 MΩ range. If tested in a lower range some readings may not be within specifications.**

5.4.1 Channel Input Impedance

a. DC 50Ω

- Recall **Input Impedance - 50 ohm x1.lss** or configure the DSO :

Panel Setups	:	**Recall FROM DEFAULT SETUP**
Channels Trace ON		**Channel 1, Channel 2, Channel 3 & Channel 4**
Input Coupling	:	**DC 50Ω** on all 4 Channels
Input gain	:	**20 mV/div.** on all 4 Channels
Time base	:	**50 ηsec/div.**
Trigger mode	:	**Auto**

- Set the DMM with **Ohms and Ohms sense** to provide a 4 wire measurement.
- Connect it to Channel 1.
- Measure the **input impedance**, reverse the meter leads and measure the input impedance.
- **Average** these two numbers and record it in Table 2, and compare it to the limits.
- Repeat the above test for all input channels.
- Recall **Input Impedance - 50 ohm x10.lss** or Set Input gain to **200 mV/div.** on all 4 Channels
- Repeat the test for all input channels.
- Record the measurements in Table 2, and compare the test results to the limits in the test record.

b. DC 1MΩ

- Recall **Input Impedance - 1 Mohm DC x1.lss** or configure the DSO :

Panel Setups	:	**Recall FROM DEFAULT SETUP**
Channels Trace ON		**Channel 1, Channel 2, Channel 3 & Channel 4**
Input Coupling	:	**DC 1 MΩ** on all 4 Channels
Input gain	:	**20 mV/div.** on all 4 Channels
Time base	:	**50 ηsec/div.**
Trigger mode	:	**Auto**

- Set the DMM with **Ohms and Ohms sense** to provide a 4 wire measurement.
- Connect it to Channel 1.
- Measure the **input impedance**, reverse the meter leads and measure the input impedance.
- **Average** these two numbers and record it in Table 2, and compare it to the limits.
- Repeat the above test for all input channels.
- Recall **Input Impedance - 1 Mohm DC x10.lss** or Set Input gain to **200 mV/div.** on all 4 Channels
- Repeat the test for all input channels.
- Record the measurements in Table 2, and compare the test results to the limits in the test record.
- Recall **Input Impedance - 1 Mohm DC x100.lsss** or Set Input gain to **2 V/div.** on all 4 Channels
- Repeat the test for all input channels.
- Record the measurements in Table 2, and compare the test results to the limits in the test record.

5.4.2 External Trigger Input Impedance

a. DC 50Ω

- Recall **Input Impedance - 50 ohm ext x1.lss** or configure the DSO :

  Select Setup trigger

  Trigger on : **EXT**

  Impedance : **DC 50Ω**

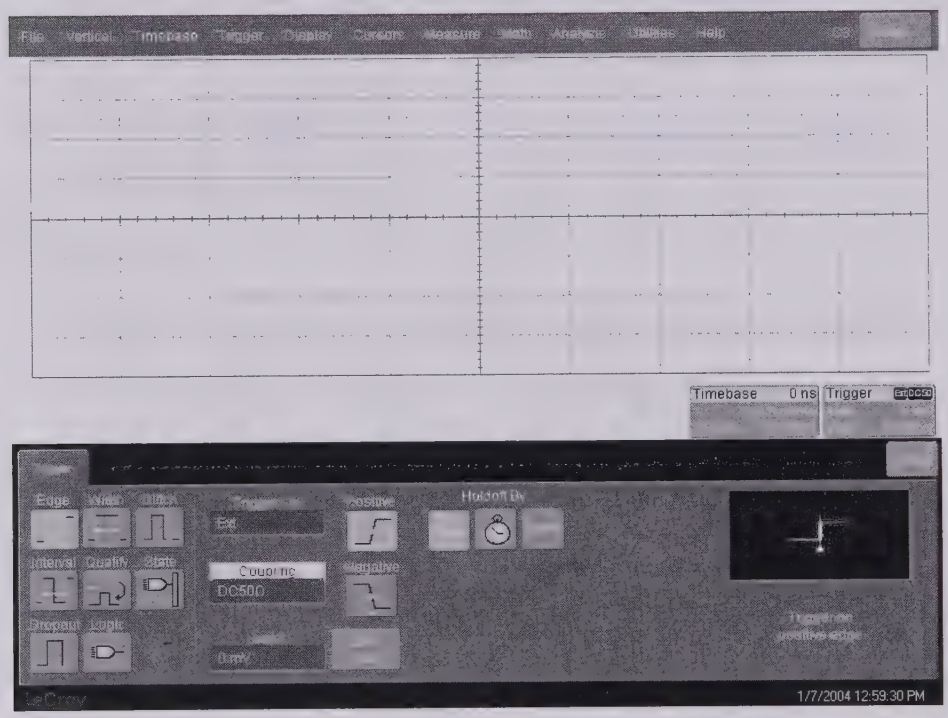

- Connect the DMM to External, and measure the **input impedance**, reverse the meter leads and measure the input impedance.
- **Average** these two numbers and record the input impedance in Table 2, and compare the result to the limit in the test record.

b. Ext DC 1MΩ Input Impedance

- Recall **Input Impedance - 1 Mohm DC Ext x1.lss** or configure the DSO :

  Select Setup trigger

Trigger on : **EXT**

Impedance : **DC 1MΩ**

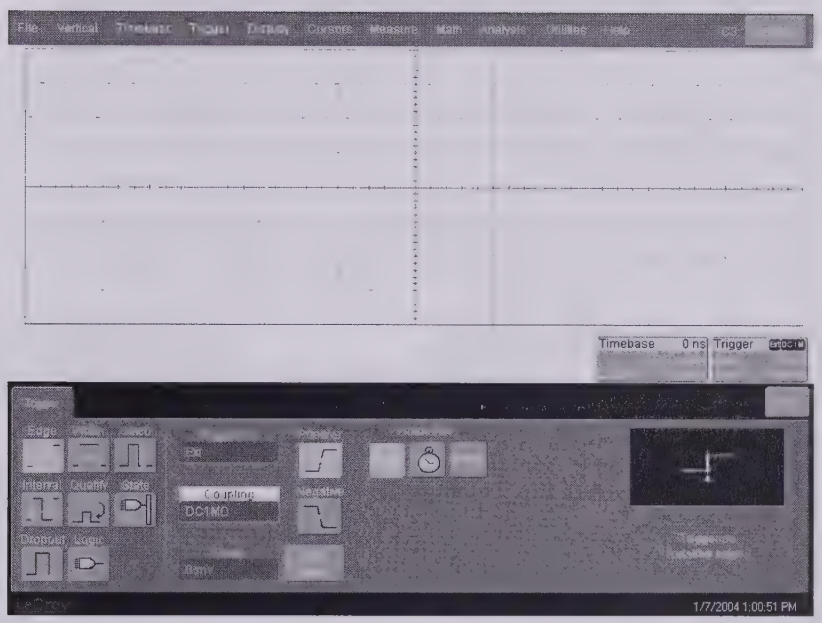

- Connect the DMM to External, and measure the **input impedance**, reverse the meter leads and measure the input impedance.
- **Average** these two numbers and record the input impedance in Table 2, and compare the result to the limit in the test record.

5.5 Leakage Current

Specifications

DC 50Ω, EXT DC 50Ω : ±2 mV

The leakage current is tested by measuring the voltage across the input channel.

5.5.1 Channel Leakage Current

a. DC 50Ω

- Recall **Leakage - 50 ohm x1.lss** or configure the DSO :

Panel Setups	:	**Recall FROM DEFAULT SETUP**
Channels Trace ON		**Channel 1, Channel 2, Channel 3 & Channel 4**
Input Coupling	:	**DC 50Ω** on all 4 Channels
Input gain	:	**20 mV/div.** on all 4 Channels
Trigger mode	:	**Auto**
Time base	:	**50 nsec/div.**

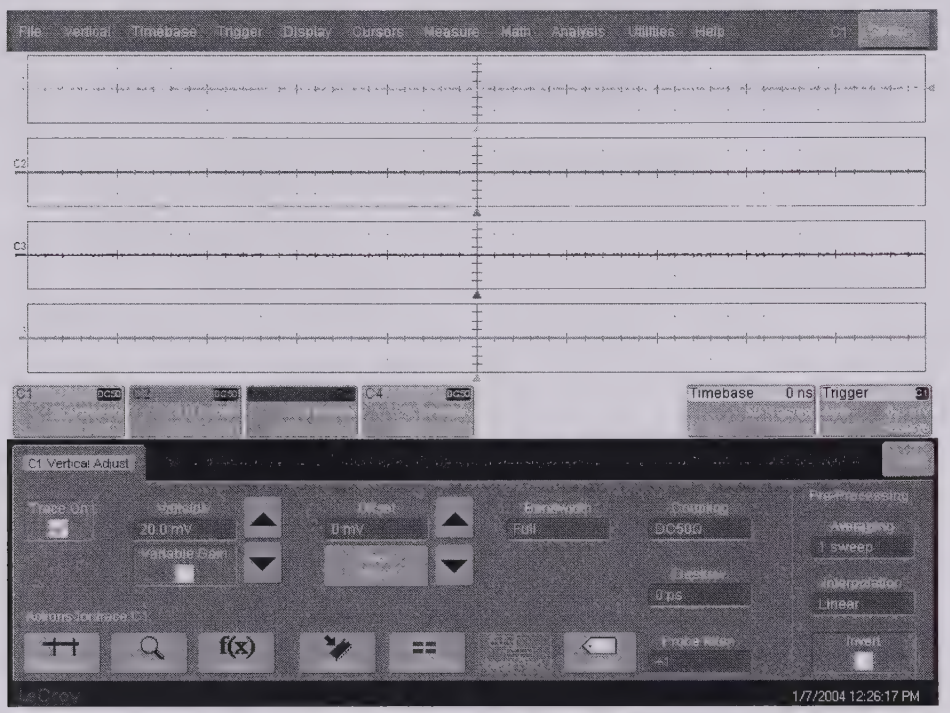

- Set the DMM to measure Volts, and connect it to Channel 1.
- Measure the **voltage** and enter it in Table 3. Compare it to the limits.
- Repeat the test for all input channels.
- Recall **Leakage - 50 ohm x10.lss** or set Input gain to **200 mV/div.** on all 4 Channels
- Repeat the test for all input channels. Record the measurements in Table 3, and compare the results to the limits in the test record.

b. DC 1MΩ

- Recall **Leakage - 1 Mohm x1.lss** or configure the DSO :

Panel Setups	:	**Recall FROM DEFAULT SETUP**
Channels Trace ON		**Channel 1, Channel 2, Channel 3 & Channel 4**
Input Coupling	:	**DC 1MΩ** on all 4 Channels
Input gain	:	**20 mV/div.** on all 4 Channels
Trigger mode	:	**Auto**
Time base	:	**50 nsec/div.**

- Set the DMM to measure Volts, and connect it to Channel 1.
- Measure the **voltage** and enter it in Table 3. Compare it to the limits.

- Repeat the test for all input channels.
- Recall **Leakage - 1 Mohm x10.lss** or set Input gain to **200 mV/div.** on all 4 Channels
- Repeat the test for all input channels. Record the measurements in Table 3, and compare the results to the limits in the test record.
- Recall **Leakage - 1 Mohm x100.lss** or set Input gain to **2 V/div.** on all 4 Channels
- Repeat the test for all input channels. Record the measurements in Table 3, and compare the results to the limits in the test record.

5.5.2 External Trigger Leakage Current

a. DC 50Ω

- Recall **Leakage - 50 ohm ext x1.lss** or configure the DSO as shown in 5.5.1 and make the following changes:

  Select Setup trigger
  Set Trigger on : **EXT**

  Impedance : **DC 50Ω**

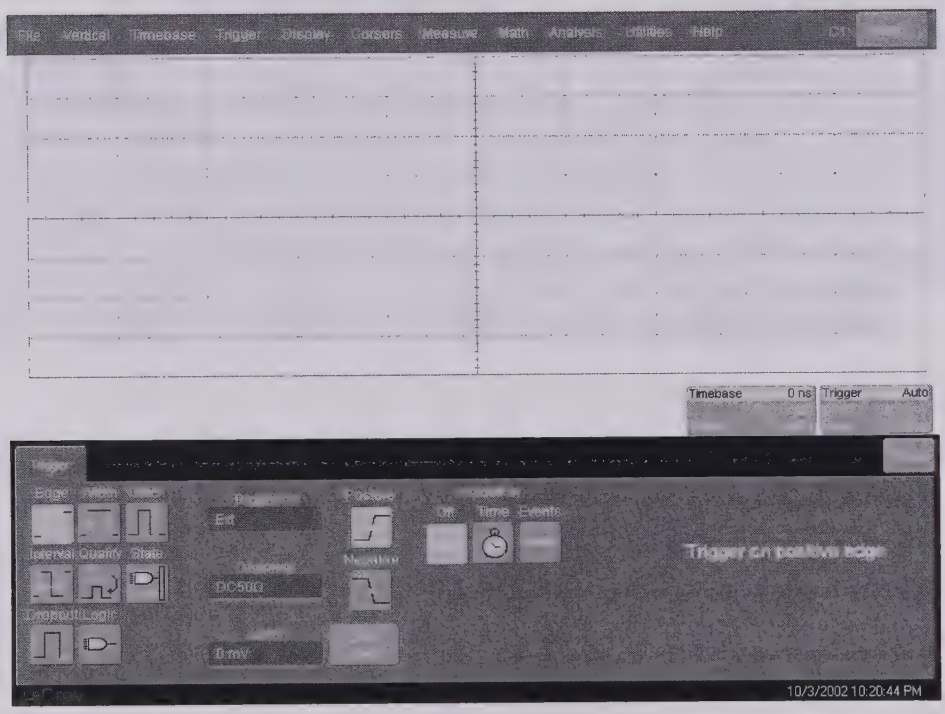

- Connect the DMM to External.
- Measure the **voltage** and enter it in Table 3. Compare it to the limits.

b. DC 1MΩ

- Recall **Leakage - 1 Mohm ext x1.lss** or configure the DSO as shown in 5.5.1 and make the following changes:

  Select Setup trigger
  Set Trigger on : **EXT**

  Impedance : **DC 1MΩ**

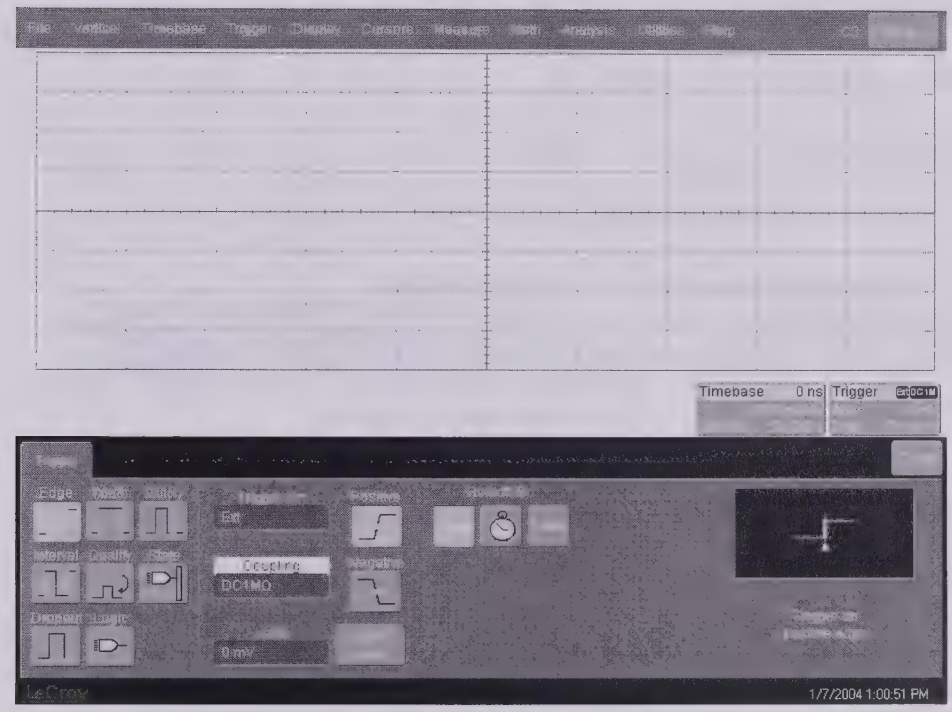

- Connect the DMM to External.
- Measure the **voltage** and enter it in Table 3. Compare it to the limits.

5.6 Peak-Peak Noise Level

Description

Noise tests with open inputs are executed on all channels with 0 mV offset, at a gain setting of 10 mV/div. The scope parameters functions are used to measure the Peak to Peak amplitude of the noise.

Specifications

7.5 mV Peak-Peak at 10 mV/div.

5.6.1 5 GS/s 50 Ohm

With no signal connected to the inputs

- Recall **Noise - 10mv.lss** or configure the DSO :

Panel Setups	:	**Recall FROM DEFAULT SETUP**
Channels Trace ON		**Channel 1, Channel 2, Channel 3 & Channel 4**
Input Coupling	:	**DC 50Ω** on all 4 Channels
Input gain	:	**10 mV/div.** on all 4 Channels
Input offset	:	**0.0 mV** on all 4 Channels
Trigger setup	:	**Edge**
Trigger on	:	**C1**
Trigger Mode	:	**Auto**
Time base	:	**1 µsec/div.**
Channel use	:	**Automatic**
Press	:	**Measure, Measure Setup,**
Statistics	:	**On**
Add parameters		
P1	:	**Measure pkpk of Ch1**
P2	:	**Measure pkpk of Ch2**
P3	:	**Measure pkpk of Ch3**
P4	:	**Measure pkpk of Ch4**

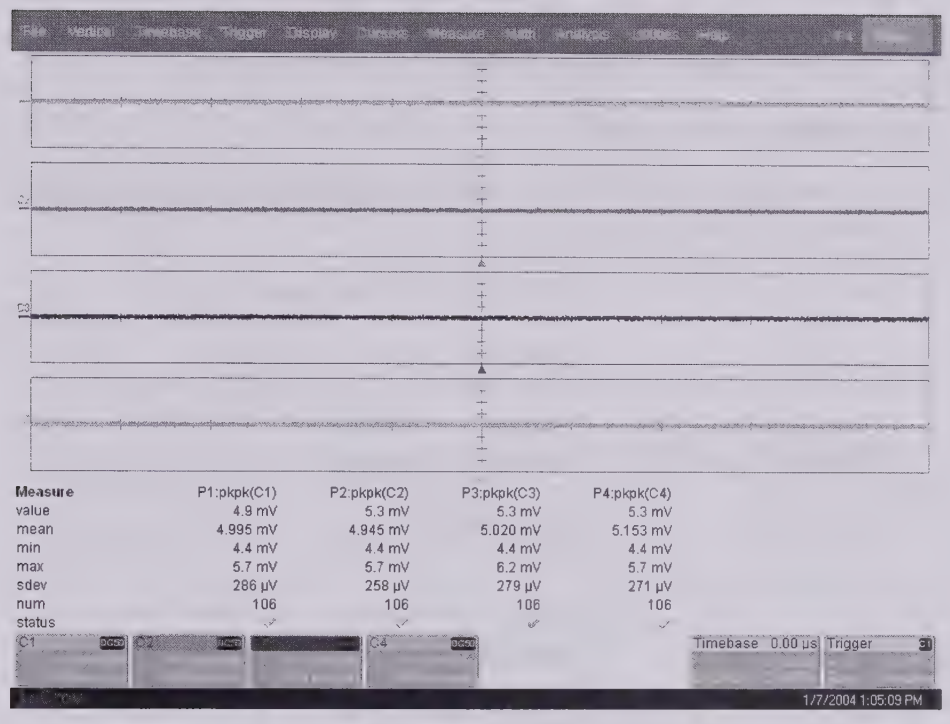

- Press **Clear Sweeps.**
- Measure for at least **50 sweeps**, and then press **Stop** to halt the acquisition.
- Record the four **max pk-pk** parameter values in Table 4, and compare the test results to the limits in the test record.
- Repeat the test for Time base : **1 msec/div.**
- Record the measurements (high pk-pk of 1,2,3,4) in Table 4, and compare the results to the limits in the test record.

5.6.2. 10 GS/s Channel Mode (WR6100 & WR6200 only)

a) Channel 1 & Channel 3

- Recall **Noise 10GS Ch1 & Ch3.lss** or configure the DSO as shown in 5.6.1 and make the following changes :

Input Coupling	:	**DC 50Ω** on all 4 Channels
Input gain	:	**10 mV/div.** On all 4 Channels
Channels Trace ON		**Channel 1**, **Channel 3**
Channels Trace OFF		**Channel 2**, **Channel 4**
Time base	:	**500 ηsec/div.**
Select Time base Setup		
Channel use	:	**Automatic**
Press	:	**Measure**
Change parameters		
P1	:	**Measure pkpk of Ch1**
P2	:	**Turn Off**
P3	:	**Measure pkpk of Ch3**
P4	:	**Turn Off**

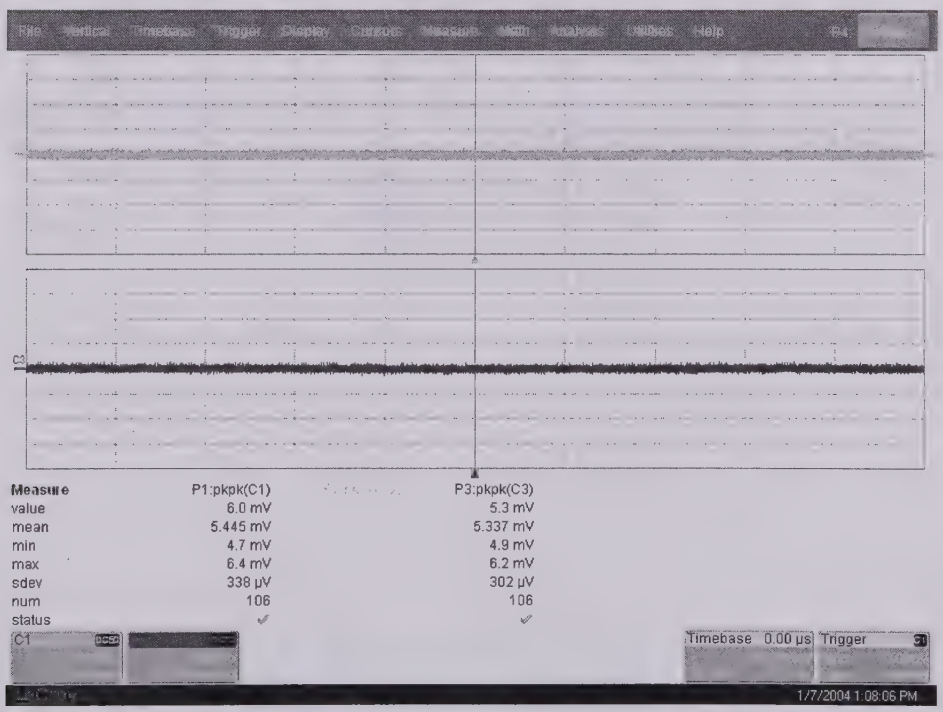

- Check that the Sampling rate is **10 GS/s**
- Press **Clear Sweeps.**
- Measure for at least **50 sweeps**, then press **Stop** to halt the acquisition.
- Record the two **max pkpk of Ch1 & Ch3** in Table 4, and compare the test results to the limits in the test record.

b) Channel 2 & Channel 4

- Recall **Noise 10GS Ch2 & Ch4.lss** or configure the DSO as shown in 5.6.1.a. and make the following changes :

Input Coupling	:	**DC 50Ω** on all 4 Channels
Input gain	:	**10 mV/div.** On all 4 Channels
Channels Trace ON		**Channel 2**, **Channel 4**
Channels Trace OFF		**Channel 1**, **Channel 3**
Time base	:	**500 ηsec/div.**
Select Time base Setup		
Channel use	:	**Automatic**
Press	:	**Measure**
Change parameters		
P1	:	**Turn Off**
P2	:	**Measure pkpk of Ch4**
P3	:	**Turn Off**
P4	:	**Measure pkpk of Ch4**

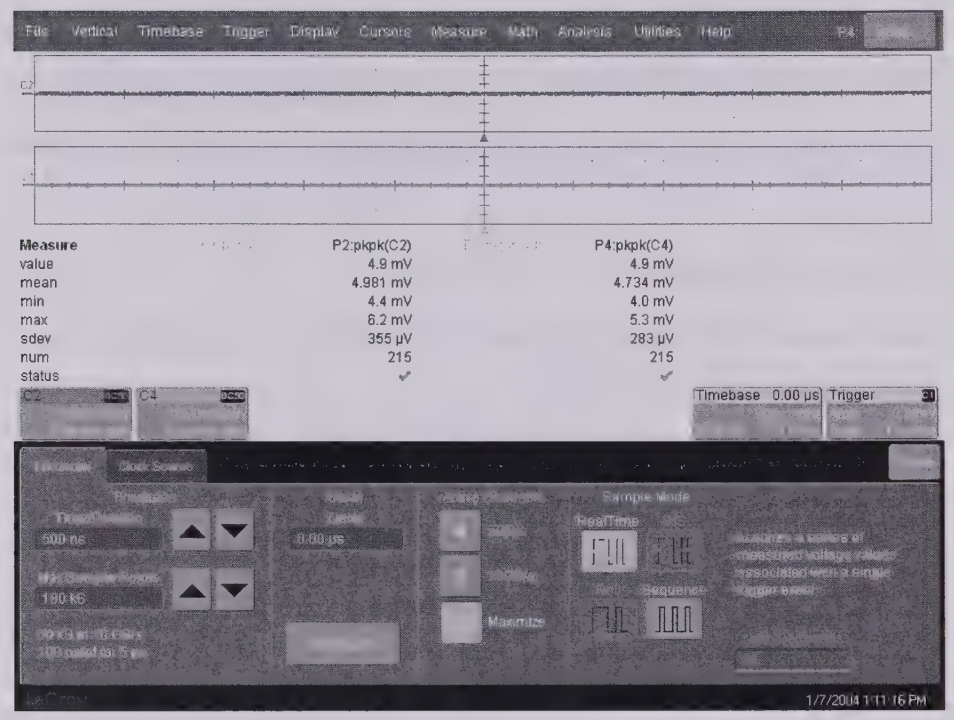

- Check that the Sampling rate is **10 GS/s**
- Press **Clear Sweeps.**
- Measure for at least **50 sweeps**, then press **Stop** to halt the acquisition.
- Record the two **max pkpk of Ch2 & Ch4** in Table 4, and compare the test results to the limits in the test record.

5.7 DC Accuracy

Specification

≤ ±2 % of full scale + 2mv, with 0 mV offset.

Note: This limit applies to a single point measurement (absolute DC accuracy, as measured by this procedure), for measurements of gain accuracy (difference of two points) the specification is: ≤ ±1.0 % of full scale

Description

This test measures the DC Accuracy within the gain range specified.
It requires a DC source with a voltage range of 0 V to 6 V adjustable in steps of no more than 15 mV, and a calibrated DMM that can measure voltage to 0.1 %.
Measurements are made using voltage values applied by the external voltage reference source, measured by the DMM, and in the oscilloscope using the parameters Mean. For each known input voltage, the deviation is checked against the tolerance.

5.7.1 Positive 50Ω DC Accuracy

Procedure

- Recall **DC accuracy - 50 ohm 2mv.lss** or configure the DSO :

Panel Setups	:	**Recall FROM DEFAULT SETUP**
Channels Trace ON		**Channel 1, Channel 2, Channel 3 & Channel 4**
Input Coupling	:	**DC 50Ω** on all 4 Channels
Input offset	:	**0.0 mV** on all 4 Channels
Input gain	:	from **2mV/div to 1 V/div.** (see Table 5) on all 4 Ch
C1 Averaging	:	**5 sweeps**
C2 Averaging	:	**5 sweeps**
C3 Averaging	:	**5 sweeps**
C4 Averaging	:	**5 sweeps**
Trigger setup	:	**Edge**
Trigger on	:	**Line**
Mode	:	**Auto**
Time base	:	**1 µsec/div**.
Channel use	:	**4**
Change parameters		
P1	:	**Measure mean of C1**
P2	:	**Measure mean of C2**
P3	:	**Measure mean of C3**
P4	:	**Measure mean of C4**

- For the low sensitivities: **2 mV through 20 mV/div**., connect the test equipment as shown in Figure 5-1.

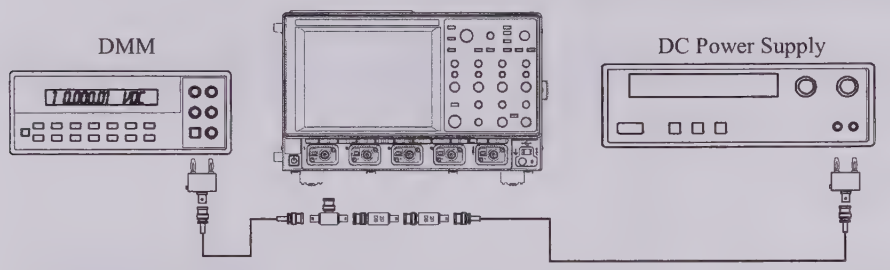

Figure 5-1 : DC 50Ω Accuracy Equipment Setup for 2 mV - 20 mV/div

- For the sensitivities: **50 mV** and **100 mV/div**, connect the test equipment as shown in Figure 5-2.

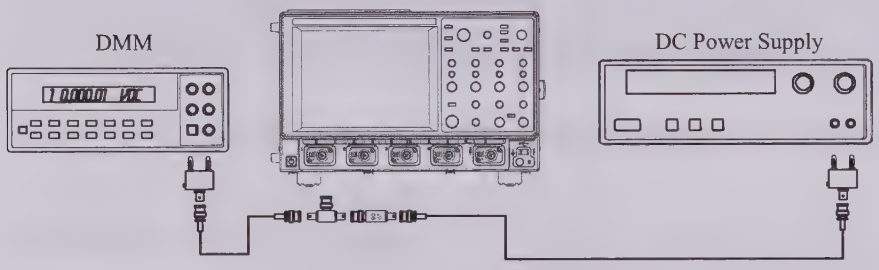

Figure 5-2 : DC 50Ω Accuracy Equipment Setup for 50 mV and 100 mV/div

- For the range **200 mV**, **500 mV** and **1 V/div** no attenuator is required, connect the test equipment as shown in Figure 5-3.

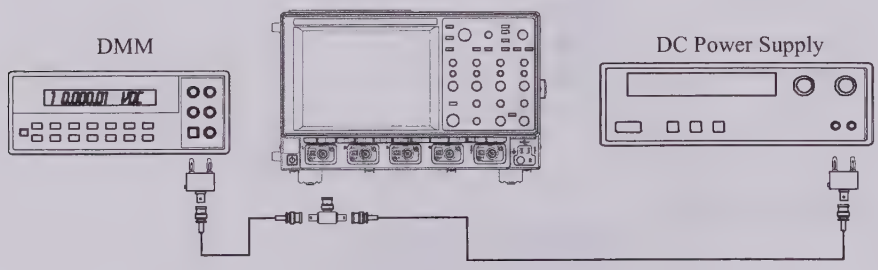

Figure 5-3 : DC 50Ω Accuracy Equipment Setup for 200 mV, 500 mV and 1 V/div.

- For each **DSO Volts/div**, set the output of the external **DC voltage reference source** as shown in Table 6, column **PS output**.

  1) Connect the DMM and record the **voltage reading** in Table 5, column **DMM.**

  2) Disconnect the DMM from the BNC T connector.

  3) Press **Clear Sweeps**

  4) After 100 sweeps, read off the **DSO mean parameter**, and record the measurement in Table 5, column **Mean**.

- For each DC voltage applied to the DSO input, repeat parts 1), 2), 3) and 4).

- Calculate the **Difference (Δ)** by subtracting the **DMM voltage** reading from the **DSO mean** voltage reading. Record the test result in Table 5, and compare the **Difference (Δ)** to the corresponding limit in the test record.

- Repeat step 5.7.1.a. for the other channels, substituting channel controls and Input connector.

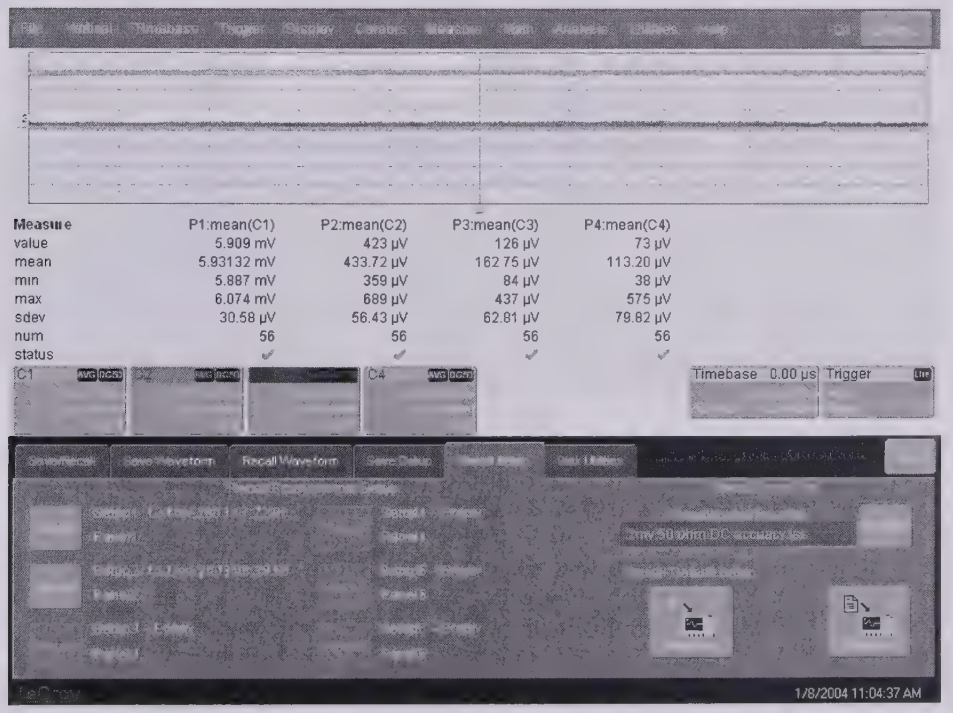

5.7.2 Negative 50Ω DC Accuracy

- Recall **DC accuracy - 50 ohm 2mv.lss** or configure the DSO as shown in 5.7.1.
- Connect the test equipment as shown in either Figure 5-1 or 5-2 or 5-3.
- For each **DSO Volts/div**, set the output of the external **DC voltage reference source** as shown in Table 6, column PS output. (if a banana-BNC adapter is being used it can simply be turned to get the opposite polarity)

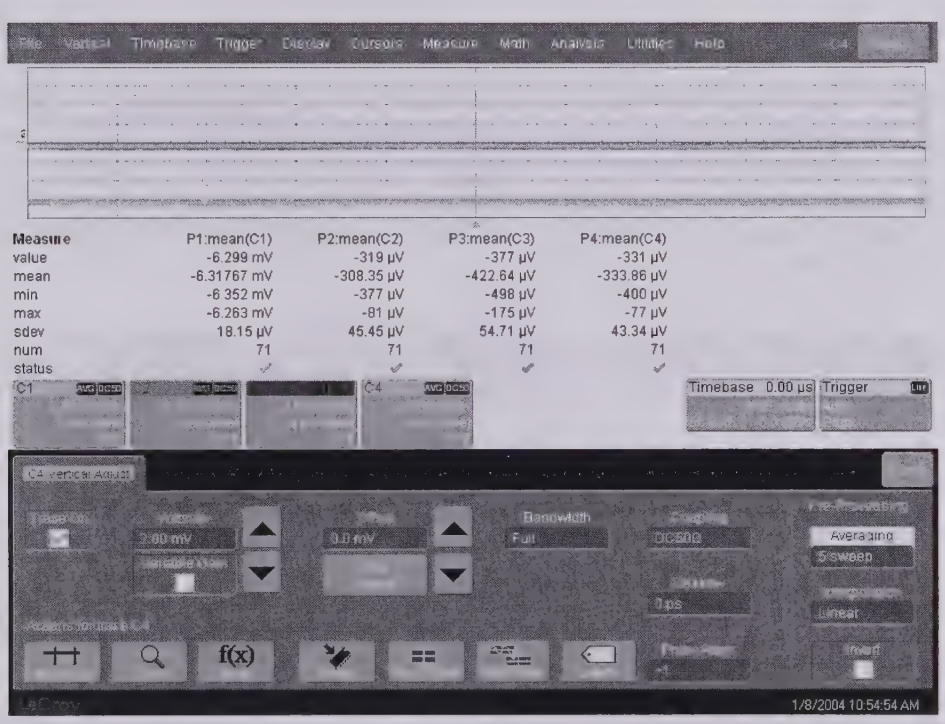

1) Connect the DMM and record the **voltage reading** in Table 6, column **DMM.**
2) Disconnect the DMM from the BNC T connector.
3) Press **Clear Sweeps**
4) After 100 sweeps, read off the **DSO mean parameter**, and record the measurement in Table 6, column **Mean**.

- For each DC voltage applied to the DSO input, repeat parts 1), 2), 3) and 4).
- Calculate the **Difference (Δ)** by subtracting the **DMM voltage** reading from the **DSO mean** voltage reading. Record the test result in Table 6, and compare the **Difference (Δ)** to the corresponding limit in the test record.
- Repeat step 5.7.2. for the other channels, substituting channel controls and input connector.

5.7.1 Positive 1MΩ DC Accuracy

Procedure

- Recall **DC accuracy - 1 Mohm 2mv.lss** or configure the DSO :

Panel Setups	:	**Recall FROM DEFAULT SETUP**
Channels Trace ON		**Channel 1, Channel 2, Channel 3 & Channel 4**
Input Coupling	:	**DC 1MΩ** on all 4 Channels
Input offset	:	**0.0 mV** on all 4 Channels
Input gain	:	from **2mV/div to 2 V/div.** (see Table 6) on all 4 Ch
C1 Averaging	:	**5 sweeps**
C2 Averaging	:	**5 sweeps**
C3 Averaging	:	**5 sweeps**
C4 Averaging	:	**5 sweeps**
Trigger setup	:	**Edge**
Trigger on	:	**Line**
Mode	:	**Auto**
Time base	:	**1 µsec/div**.
Channel use	:	**4**
Change parameters		
P1	:	**Measure mean of C1**
P2	:	**Measure mean of C2**
P3	:	**Measure mean of C3**
P4	:	**Measure mean of C4**

- For the low sensitivities: **2 mV through 20 mV/div**., connect the test equipment as shown in Figure 5-4.

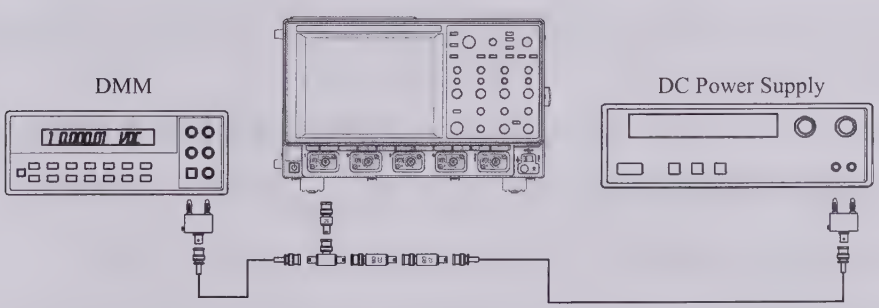

Figure 5-4 : DC 1MΩ Accuracy Equipment Setup for 2 mV - 20 mV/div

- For the sensitivities: **50 mV** and **100 mV/div**, connect the test equipment as shown in Figure 5-5.

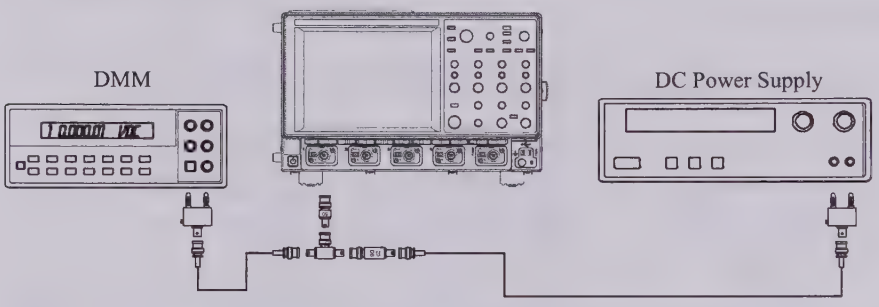

Figure 5-5 : DC 1MΩ Accuracy Equipment Setup for 50 mV and 100 mV/div

- For the range **200 mV**, - **2 V/div** no attenuator is required, connect the test equipment as shown in Figure 5-6.

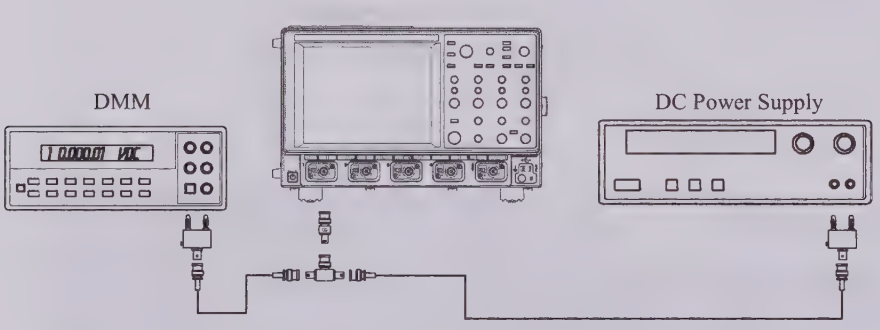

Figure 5-6 : DC 1MΩ Accuracy Equipment Setup for 200 mV, 500 mV and 1 V/div.

- For each **DSO Volts/div**, set the output of the external **DC voltage reference source** as shown in Table 7, column **PS output**.

  1) Connect the DMM and record the **voltage reading** in Table 7, column **DMM.**

  2) Disconnect the DMM from the BNC T connector.

  3) Press **Clear Sweeps**

  4) After 100 sweeps, read off the **DSO mean parameter**, and record the measurement in Table 7, column **Mean**.

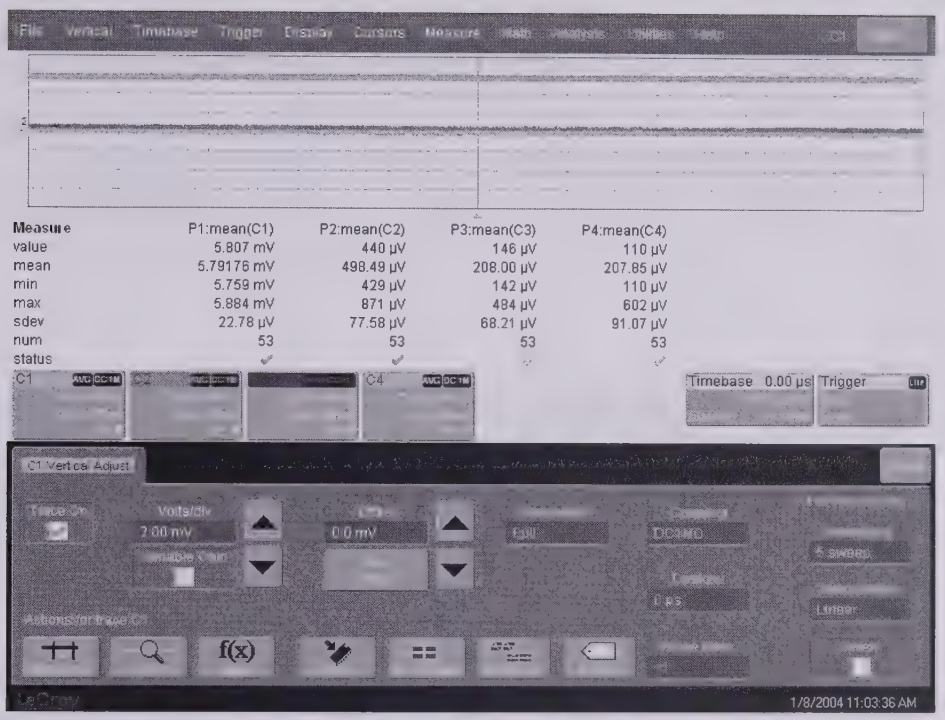

- For each DC voltage applied to the DSO input, repeat parts 1), 2), 3) and 4).

- Calculate the **Difference (Δ)** by subtracting the **DMM voltage** reading from the **DSO mean** voltage reading. Record the test result in Table 7, and compare the **Difference (Δ)** to the corresponding limit in the test record.

- Repeat step 5.7.1.a. for the other channels, substituting channel controls and Input connector.

5.7.2 Negative 1MΩ DC Accuracy

- Recall **DC accuracy - 1 Mohm 2mv.lss** or configure the DSO as shown in 5.7.1.

- Connect the test equipment as shown in either Figure 5-4 or 5-5 or 5-6.

- For each **DSO Volts/div**, set the output of the external **DC voltage reference source** as shown in Table 8, column PS output. (if a banana-BNC adapter is being used it can simply be turned to get the opposite polarity)

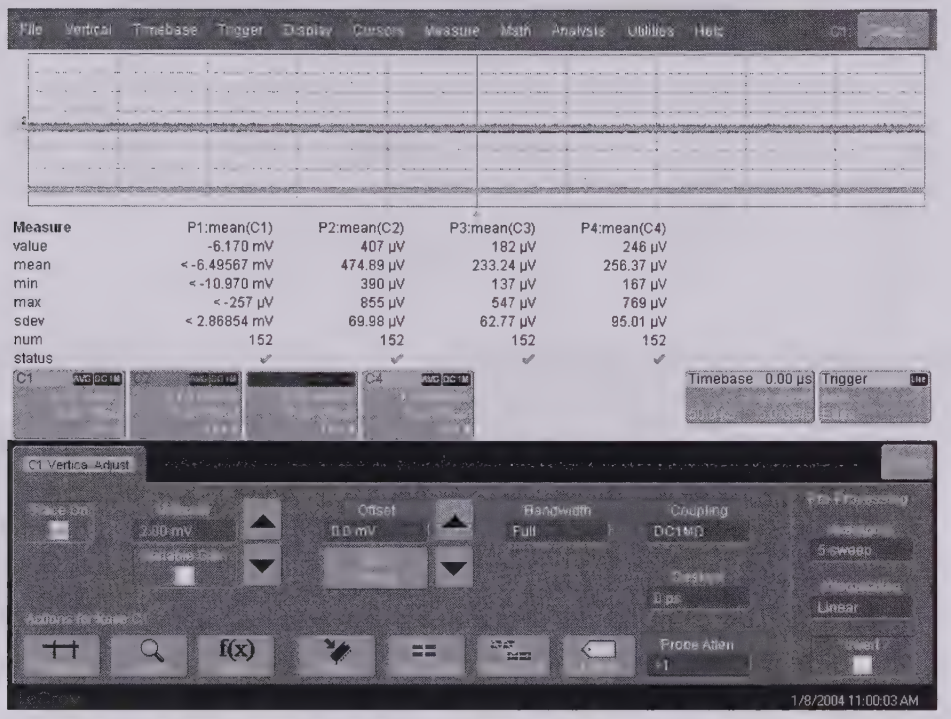

1) Connect the DMM and record the **voltage reading** in Table 8, column **DMM.**
2) Disconnect the DMM from the BNC T connector.
3) Press **Clear Sweeps**
4) After 100 sweeps, read off the **DSO mean parameter**, and record the measurement in Table 8, column **Mean**.

- For each DC voltage applied to the DSO input, repeat parts 1), 2), 3) and 4).

- Calculate the **Difference (Δ)** by subtracting the **DMM voltage** reading from the **DSO mean** voltage reading. Record the test result in Table 8, and compare the **Difference (Δ)** to the corresponding limit in the test record.

- Repeat step 5.7.2. for the other channels, substituting channel controls and input connector.

5.8 Offset Accuracy

Specifications

±(1.5% of offset + .5% of FS + 1mv)

Description

The offset test is done at 50 mV/div, with a signal of ±0.750 Volt cancelled by an offset of the opposite polarity.

5.8.1 Positive 50Ω Offset Accuracy

Procedure

- Recall **Offset - 50 ohm Positive.lss** or configure the DSO:

Panel Setups	:	**Recall FROM DEFAULT SETUP**
Channels Trace ON		**Channel 1, Channel 2, Channel 3 & Channel 4**
Input Coupling	:	**DC 50Ω** on all 4 Channels
Input gain	:	**50mV/div** on all 4 Channels
Input offset	:	**+0.750 Volt** on all 4 Channels
C1 Averaging	:	**5 sweeps**
C2 Averaging	:	**5 sweeps**
C3 Averaging	:	**5 sweeps**
C4 Averaging	:	**5 sweeps**
Trigger setup	:	**Edge**
Trigger on	:	**Line**
Mode	:	**Auto**
Time base	:	**50 ηsec/div**.
Channel use	:	**4**
Statistics	:	**on**
Change parameters		
P1	:	**Measure mean of C1**
P2	:	**Measure mean of C2**
P3	:	**Measure mean of C3**
P4	:	**Measure mean of C4**

- Connect the test equipment as shown in Figure 5-7.

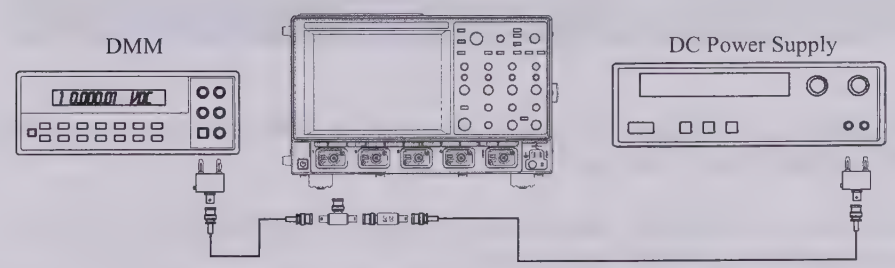

Figure 5-7 : Offset Accuracy Equipment Setup

- Set the output of the external **DC voltage reference source until the DVM measures –0.750 Volt.**

1) Verify that the displayed trace A : Average (1) is on the screen, near the center horizontal graticule line. If the trace is not visible, modify the **DC voltage reference source output** until the trace is within ± 2 divisions of center.

2) Connect the DMM and record the **voltage reading** in Table 9, column **DMM**.

3) Disconnect the DMM from the BNC T connector.

4) Press **Clear Sweeps**

5) After 100 sweeps, Read off the DSO Mean parameter voltage, and record the measurement in Table 9, column Mean.

- Repeat the test for the other channels, substituting channel controls and input connector. Record the measurements in Table 9.

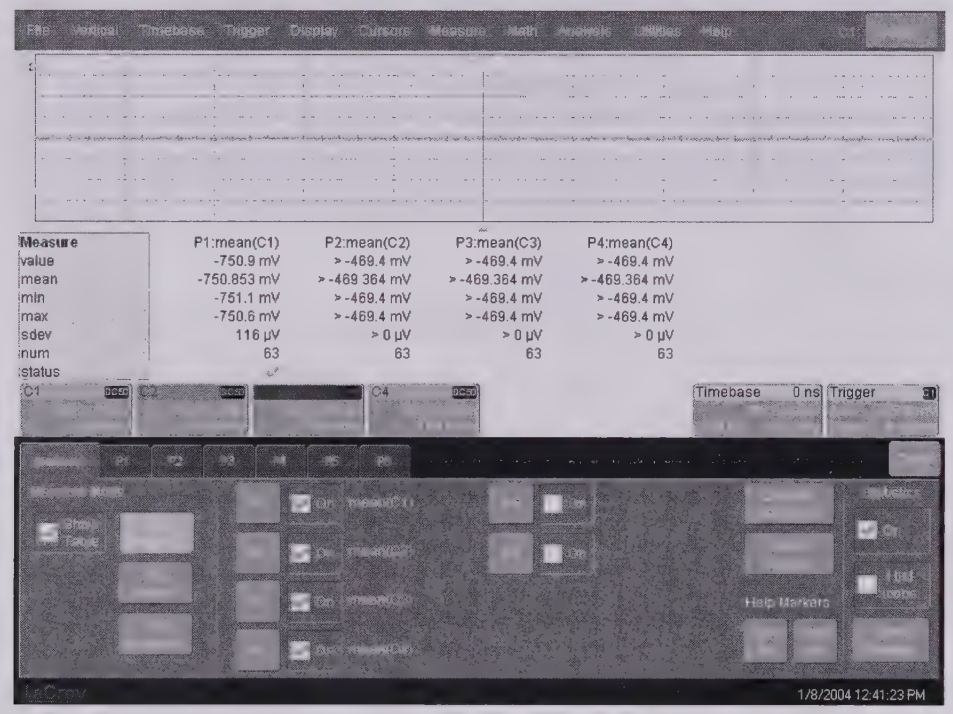

- Calculate the **Difference (Δ)** by subtracting the **DMM voltage** reading from the **DSO mean** voltage reading.

- Record the test result in Table 9, and compare the **Difference (Δ)** to the corresponding limit in the test record.

5.8.2 Negative 50Ω Offset Accuracy

Procedure

- Recall **Offset - 50 ohm Negative.lss** or configure the DSO as shown in 5.8.1 and for each channel make the following change :

  Input offset : **–0.750 Volt** on all 4 Channels

- Connect the test equipment as shown in Figure 5-7.

- Set the output of the external **DC voltage** reference source until the DMM measures +0.750 Volt.

  1) Verify that the displayed trace A : Average (1) is on the screen, near the center horizontal graticule line. If the trace is not visible, modify the **DC voltage reference source output** until the trace is within ± 2 divisions of center.

  2) Connect the DMM and record the **voltage reading** in Table 10, column **DMM**.

  3) Disconnect the DMM from the BNC T connector.

  4) Press **Clear Sweeps**

  5) After 100 sweeps, Read off the **DSO Mean parameter** voltage, and record the measurement in Table 10, column **Mean**.

- Repeat the test for the other channels, substituting channel controls and input connector. Record the measurements in Table 10.

- Calculate the **Difference (Δ)** by subtracting the **DMM voltage** reading from the **DSO mean** voltage reading. Record the test result in Table 10, and compare the **Difference (Δ)** to the corresponding limit in the test record.

5.8.3 Positive 1MΩ Offset Accuracy

Procedure

- Recall **Offset - 1 Mohm Positive.lss** or configure the DSO:

Panel Setups	:	**Recall FROM DEFAULT SETUP**
Channels Trace ON		**Channel 1, Channel 2, Channel 3 & Channel 4**
Input Coupling	:	**DC 1MΩ** on all 4 Channels
Input gain	:	**50mV/div** on all 4 Channels
Input offset	:	**+0.750 Volt** on all 4 Channels
C1 Averaging	:	**5 sweeps**
C2 Averaging	:	**5 sweeps**
C3 Averaging	:	**5 sweeps**
C4 Averaging	:	**5 sweeps**
Trigger setup	:	**Edge**
Trigger on	:	**Line**
Mode	:	**Auto**
Time base	:	**50 ηsec/div**.
Channel use	:	**4**
Statistics	:	**on**
Change parameters		
P1	:	**Measure mean of C1**
P2	:	**Measure mean of C2**
P3	:	**Measure mean of C3**
P4	:	**Measure mean of C4**

- Connect the test equipment as shown in Figure 5-7.

- Set the output of the external **DC voltage reference source until the DVM measures –0.750 Volt.**

  1) Verify that the displayed trace A : Average (1) is on the screen, near the center horizontal graticule line. If the trace is not visible, modify the **DC voltage reference source output** until the trace is within ± 2 divisions of center.

  2) Connect the DMM and record the **voltage reading** in Table 11, column **DMM**.

  3) Disconnect the DMM from the BNC T connector.

  4) Press **Clear Sweeps**

  5) After 100 sweeps, Read off the DSO Mean parameter voltage, and record the measurement in Table 11, column Mean.

- Repeat the test for the other channels, substituting channel controls and input connector. Record the measurements in Table 11.

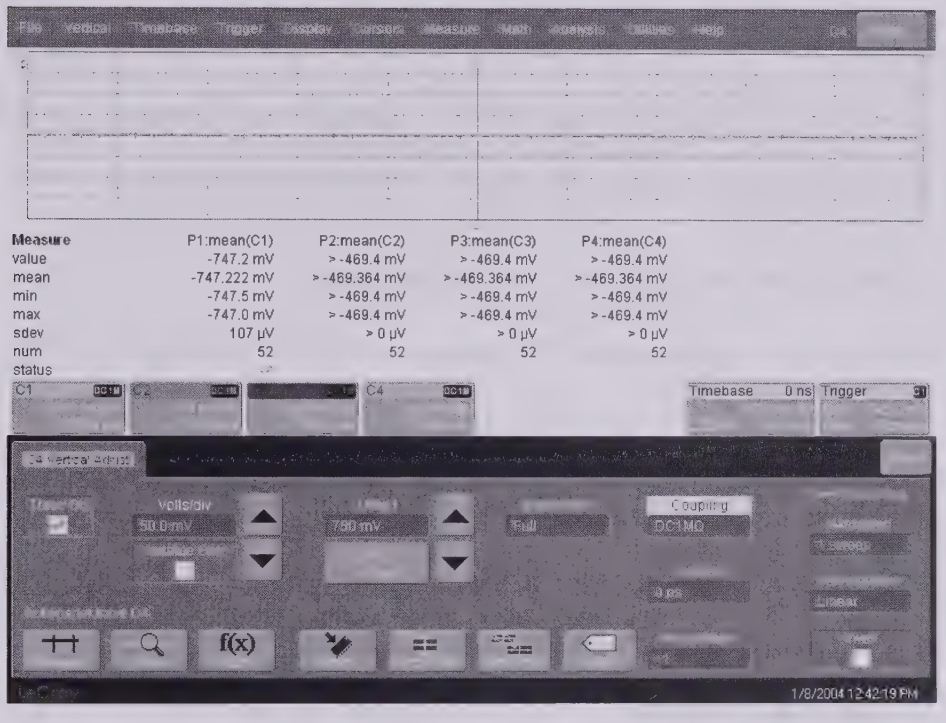

- Calculate the **Difference (Δ)** by subtracting the **DMM voltage** reading from the **DSO mean** voltage reading.

- Record the test result in Table 11, and compare the **Difference (Δ)** to the corresponding limit in the test record.

5.8.4 Negative 1MΩ Offset Accuracy

Procedure

- Recall **Offset - 1 Mohm Negative.lss** or configure the DSO as shown in 5.8.1 and for each channel make the following change :

  Input offset : **–0.750 Volt** on all 4 Channels

- Connect the test equipment as shown in Figure 5-7.

- Set the output of the external **DC voltage** reference source until the DMM measures +0.750 Volt.

  1) Verify that the displayed trace A : Average (1) is on the screen, near the center horizontal graticule line. If the trace is not visible, modify the **DC voltage reference source output** until the trace is within ± 2 divisions of center.

  2) Connect the DMM and record the **voltage reading** in Table 12, column **DMM**.

  3) Disconnect the DMM from the BNC T connector.

  4) Press **Clear Sweeps**

  5) After 100 sweeps, Read off the **DSO Mean parameter** voltage, and record the measurement in Table 12, column **Mean**.

- Repeat the test for the other channels, substituting channel controls and input connector. Record the measurements in Table 12.

- Calculate the **Difference (Δ)** by subtracting the **DMM voltage** reading from the **DSO mean** voltage reading. Record the test result in Table 12, and compare the **Difference (Δ)** to the corresponding limit in the test record.

5.9 Bandwidth

5.9.1 Description

The purpose of this test is to ensure that the entire system has a bandwidth of at least 2 GHz for a WaveRunner 6200, 1 GHz for a WaveRunner 6100, 500 MHz for a WaveRunner 6050 or 6051 and 350 MHz for a WaveRunner 6030. An external source is used as the reference to provide a signal where amplitude and frequency are well controlled. The HP8648B may be used when testing the lower bandwidth scopes.
The amplitude of the generator and cable as a function of frequency and power is calibrated using an HP8482A sensor on an HP437B power meter or equivalent.
Note: If a leveled generator is used then the corrections needed by using the power meter may not be necessary.

Specifications

WaveRunner 6200, LSA1225
50Ω : DC to at least 2 GHz (-3 dB)

WaveRunner 6100, VBA6100
50Ω : DC to at least 1 GHz (-3 dB)

WaveRunner 6050, 6051 or VBA6050
50Ω : DC to at least 500 MHz (-3 dB)

WaveRunner 6030
50Ω : DC to at least 350 MHz (-3 dB)

- Recall **Bandwidth - CH1 10mv.lss** or configure the DSO:

Panel Setups	:	**Recall FROM DEFAULT SETUP**
Channels Trace ON		**Channel 1, Channel 2, Channel 3 & Channel 4**
Input Coupling	:	**DC 50Ω** on all 4 Channels
Input gain	:	**10 mV/div** on all 4 Channels
Input offset	:	**0 mV** on all 4 Channels
Trigger setup	:	**Edge**
Trigger on	:	**Line**
Slope line	:	**Pos**
Mode	:	**Auto**
Time base	:	**50 ηsec/div**.
Channel use	:	**Automatic**
Change parameters		
P1	:	**Sdev of C1**
P2	:	**Freq of C1**

- Connect the HP8482A power sensor to the power meter.

- Zero and **calibrate** the HP8482A power sensor using the power meter **Power Ref output**.

- Connect a **BNC adapter** to the HP8482A power sensor.

- Connect a 50Ω SMA cable to the **RF output** of the HP8648B/C generator and then through the necessary adapters to the power sensor. It is very important that the same cable/generator be used throughout this BW procedure and that the SMA connectors are torqued at all their mating locations.

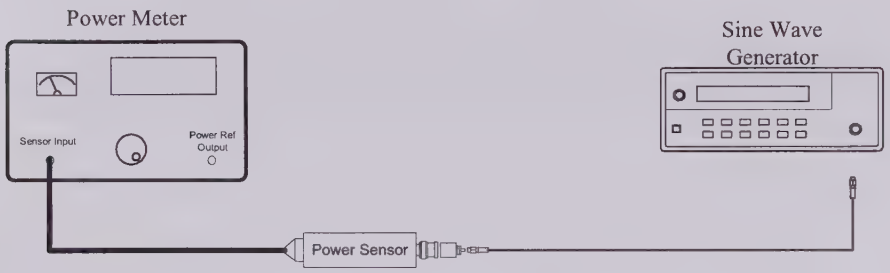

Figure 5-8 : Power Meter Equipment Setup

- Set the generator frequency to **10 MHz**

- Set the generator amplitude to measure **8 µW** on the power meter.

- Read the displayed **generator output amplitude,** and record it in the fourth column of Table 8.

- Repeat the above measurement for the apropiate scope model, **350.1 MHz, 500.1 MHz, 1000,1 & 2000.1 MHz.** Record the generator output amplitude readout in the fourth column of Table 8.

- Disconnect the **RF output** of the HP8648B/C generator from the power sensor.

- Connect the **RF output** of the HP8648B/C generator through the same cable that was calibrated in the previous step into Channel 1 and connect any attenuators as listed in the table.

Figure 5-9 : 50Ω Bandwidth Equipment Setup

- Set the generator frequency to **10 MHz**.

- From the generator, apply the **recorded generator signal amplitude** to Channel 1.

- Measure the value of **Sdev(1)** in Table 8.

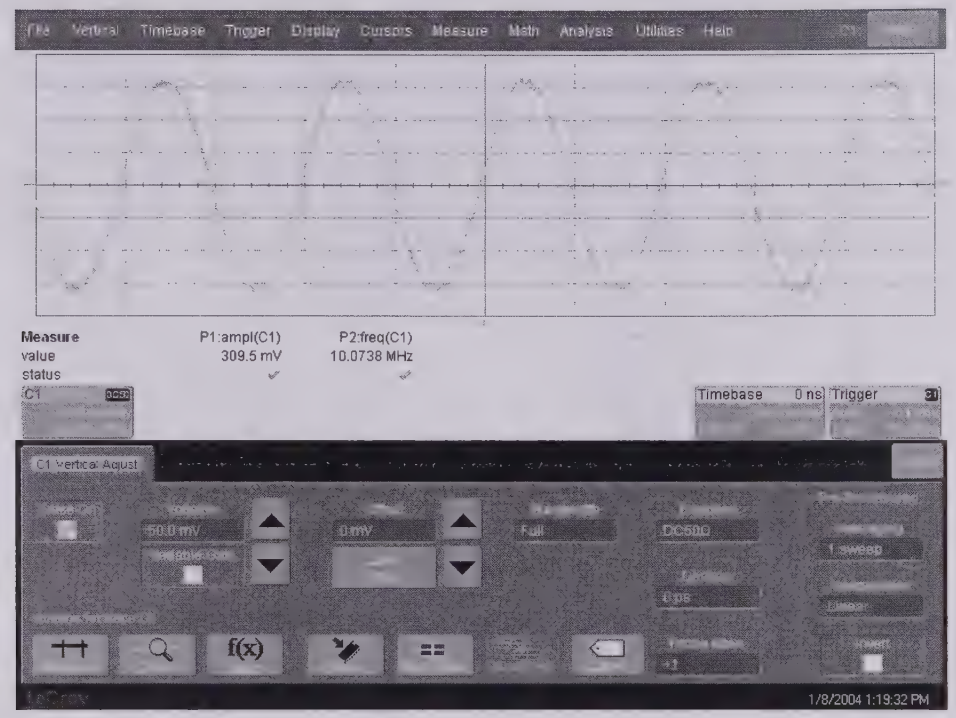

- Increase the frequency of the generator to the maximum input frequency for that model, adjusting the amplitude so that the power remains constant and measure the value of Sdev. Record in Table 13.

- Repeat the above 3 steps for Channel 2, (**Bandwidth – CH2 10mv.lss**) 3 (**Bandwidth – CH3 10mv.lss**) & 4 (**Bandwidth – CH4 10mv.lss**) substituting channel controls and input connector. Record the measurements in Table 13.

- Calculate the ratio to 10 MHz for each channel, $sdev_{2000.1}$/ $sdev_{10}$ (for WaveRunner 6200), $sdev_{1000.1}$/ $sdev_{10}$ (for WaveRunner 6100), $sdev_{500.1}$/$sdev_{10}$ (for WaveRunner 6050 or 6051), $sdev_{350.1}$/ $sdev_{10}$ (for WaveRunner 6030) and compare the results to the limits in the test record.

- Repeat the above steps for V/div setting of 50 mV, 100 mV, and 500mV, using the appropriate **Bandwidth - CHx yymv.lss** (where x is channel and yy is V/div setting) panel setup and recording your results in Tables 14 through 16. Use the power setting and attenuators as shown in the tables.

5.10 Trigger Level

5.10.1 Description

The trigger capabilities are tested for several cases of the standard edge trigger:

- Channel (internal), and External Trigger sources
- Three DC levels: –2.5, 0, +2.5 major screen divisions
- Positive and negative slopes

5.10.2 Channel Trigger at 0 Division Threshold

Recall **Trigger - CH1 0 div neg slope.lss** or configure the DSO:

Panel Setups	:	**Recall FROM DEFAULT SETUP**
Channels Trace ON		**Channel 1, Channel 2, Channel 3 & Channel 4**
Input Coupling	:	**DC 50Ω** on all 4 Channels
Input gain	:	**100 mV/div.** on all 4 Channels
Input offset	:	**0 mV** on all 4 Channels (use show status to verify)
Trigger setup	:	**Edge**
Trigger on	:	**C1**
Slope 1	:	**Pos**
Mode	:	**Auto**
Set Trigger level	:	**DC 0.0 mV**
Pre-Trigger Delay	:	**50 %**
Time base	:	**1 µsec/div.**
C1 Pre-Processing:		**Averaging 10 sweeps**
C2 Pre-Processing:		**Averaging 10 sweeps**
C3 Pre-Processing:		**Averaging 10 sweeps**
C4 Pre-Processing:		**Averaging 10 sweeps**

- Set the output of the sine wave generator to **100 KHz.**
- Connect the output of the generator to Channel 1 through a 50 Ohm coaxial cable as shown in Figure 5-10 and adjust the sine wave output amplitude to get **90% of full scale.**

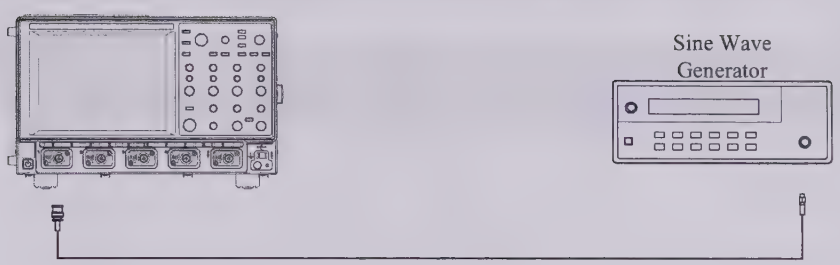

Figure 5-10 Channel Trigger Equipment Setup

- Select Measure: **Cursors, Horizontal Abs**
- Use the "cursor position" knob, to move the **Time marker** at 0.0 ns

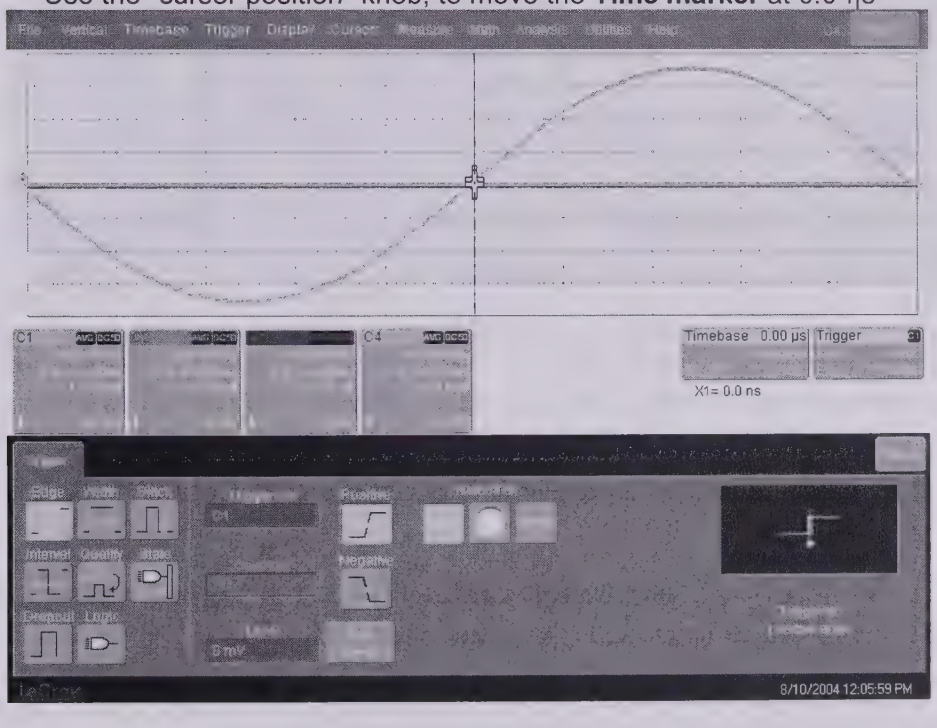

- Press **Clear Sweeps**,
- Acquire 10 sweeps and record in Table 15 the **level** readout displayed below 100 mV in the icon **1,** at top left.
- Compare the test results to the corresponding limit in the test record.
- Set Trigger Slope 1 : **Neg**

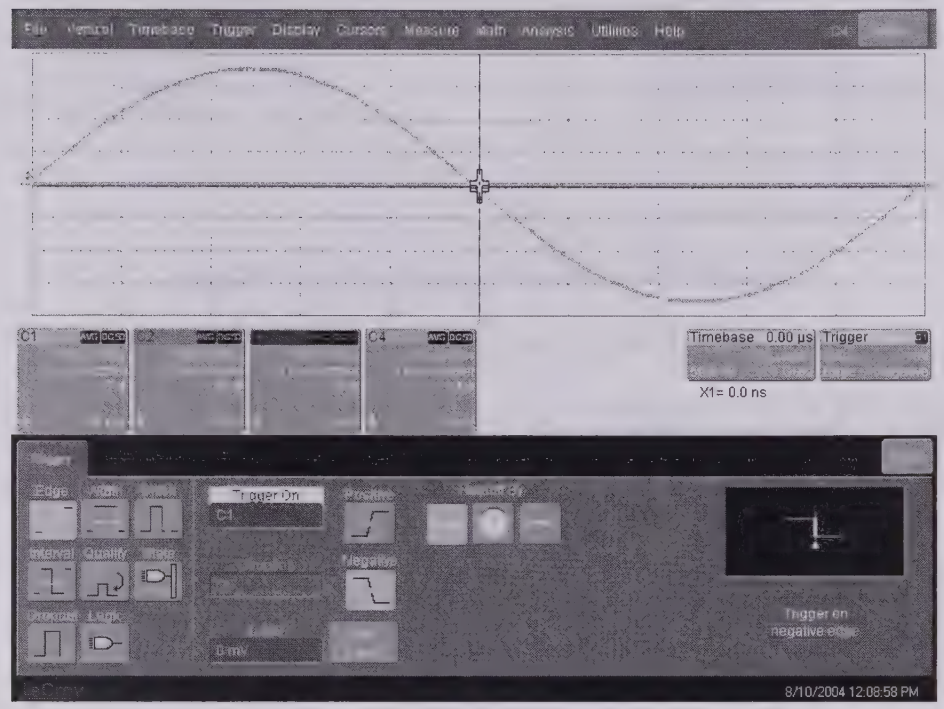

- Acquire 10 sweeps and record in Table 15 the **level** readout displayed below 100 mV in the icon **1,** at top left.
- Set trigger to channels 2, 3 and 4 and for both POS and NEG slope, move input signal to appropriate channel and compare the test results to the corresponding limit in the test record.

5.10.3 Channel Trigger at +2.5 Divisions Threshold

- Recall **Trigger - CH1 +2.5 div pos slope.lss** or configure the DSO as shown in 5.10.2 and for each Channel make the following change :

  Set Trigger level : **DC +250 mV**

- Connect the output of the generator to Channel 1 through a 50 Ohm coaxial cable.
- Press **Clear Sweeps**,
- Acquire 10 sweeps and record in Table 15 the **level** readout displayed below 100 mV in the icon **1,** at top left.
- Compare the test results to the corresponding limit in the test record.

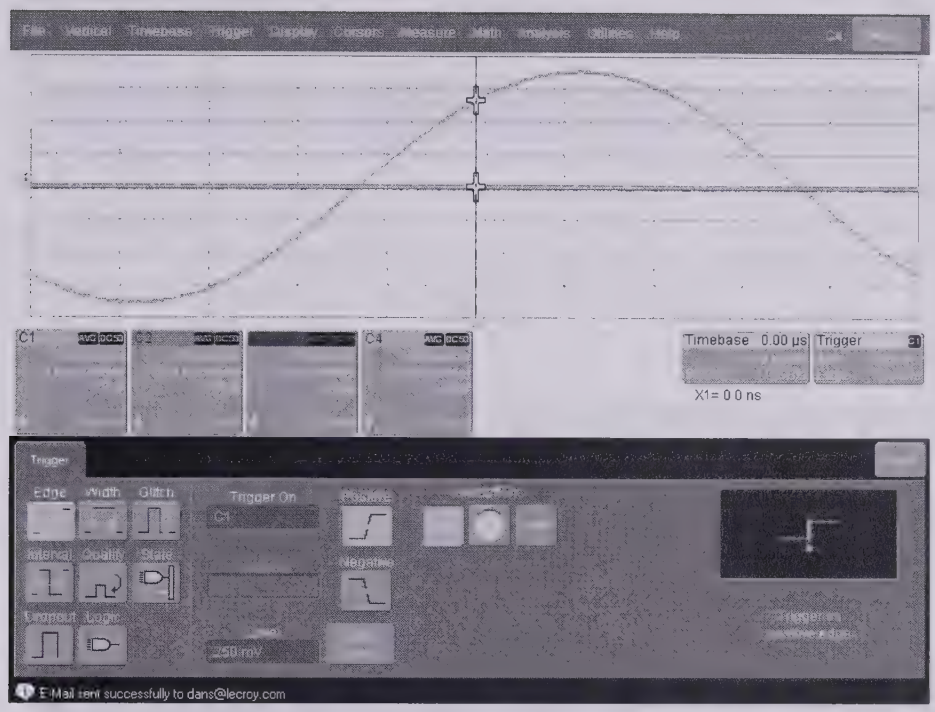

- Set Trigger Slope 1 : **Neg**
- Acquire 10 sweeps and record in Table 15 the **level** readout displayed below 100 mV in the icon **1,** at top left.
- Set trigger to channels 2, 3 and 4 and for both POS and NEG slope move input signal to appropriate channel and compare the test results to the corresponding limit in the test record.

5.10.4 Channel Trigger at –2.5 Divisions Threshold

- Recall **Trigger - CH1 -2.5 div pos slope.lss** or configure the DSO as shown in 5.10.2 and for each channel make the following change :

  Set Trigger level : **DC –250 mV**

- Connect the output of the generator to Channel 1 through a 50 Ohm coaxial cable.
- Press **Clear Sweeps**,
- Acquire 10 sweeps and record in Table 15 the **level** readout displayed below 100 mV in the icon **1,** at top left.

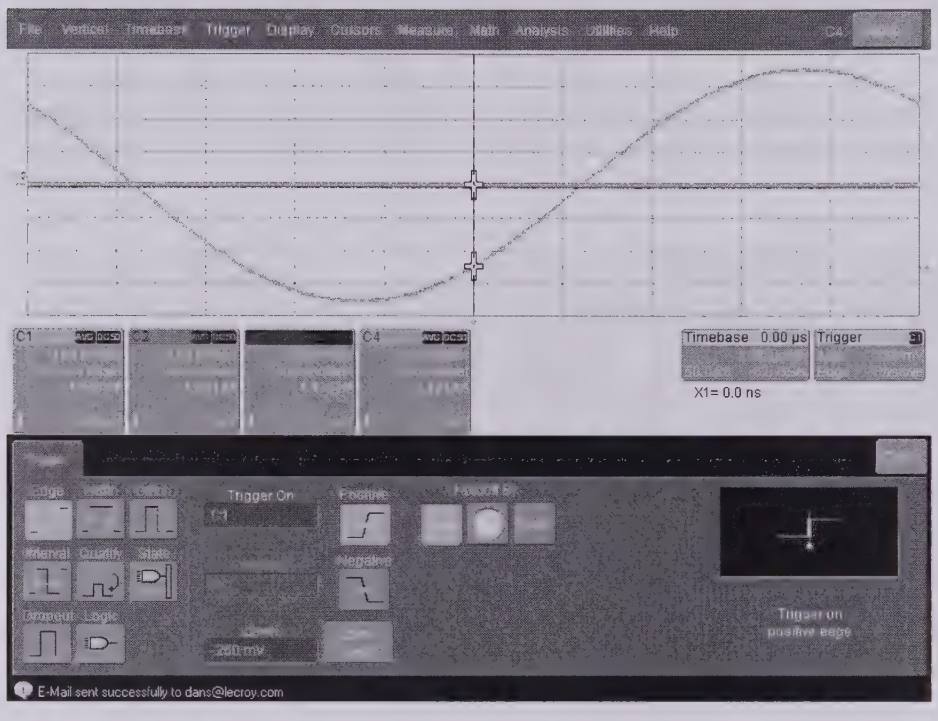

- Compare the test results to the corresponding limit in the test record.
- Set Trigger Slope 1 : **Neg**
- Acquire 10 sweeps and record in Table 17 the **level** readout displayed below 100 mV in the icon **1,** at top left.
- Set trigger to channels 2, 3 and 4 and for both POS and NEG slope move input signal to appropriate channel and compare the test results to the corresponding limit in the test record.

5.11 Time Base Accuracy

5.11.1 Description

An external sine wave generator of **10.0 MHz** with frequency accuracy better than 1 PPM is used.

Specifications

10 GHz clock : accuracy : ≤ ±**0.0005 % or** ≤ ±**5 PPM**

5.11.2 10 GHz Clock Verification Procedure

- Recall **Timebase Accuracy.lss** or configure the DSO

Panel Setups	:	**Recall FROM DEFAULT SETUP**
Channels trace ON		**Channel 1**
Input gain	:	**.1 V/div.**
Input offset	:	**0 mV**
Trigger setup	:	**Edge**
Trigger on	:	**C1**
Slope 1	:	**Pos**
Level 1	:	**100 mV**
Trigger mode	:	**Norm**
Delay	:	**0 %**
Time base	:	**500 msec/div.**
Channel use	:	**4**
Measure	:	**Parameters**
P1	:	**Amplitude of C1**
P2	:	**Frequency of C1**

- Connect the **RF output** of the signal generator through a 50 Ohm coaxial cable into Channel 1.
- Set the generator frequency to **10.0 MHz**.
- Adjust the generator output amplitude to get **6 divisions peak to peak.**
- Read of the frequency parameter (to 2 decimal places) and record the value in Table 18.
- Verify that the error is less than 50 Hz.

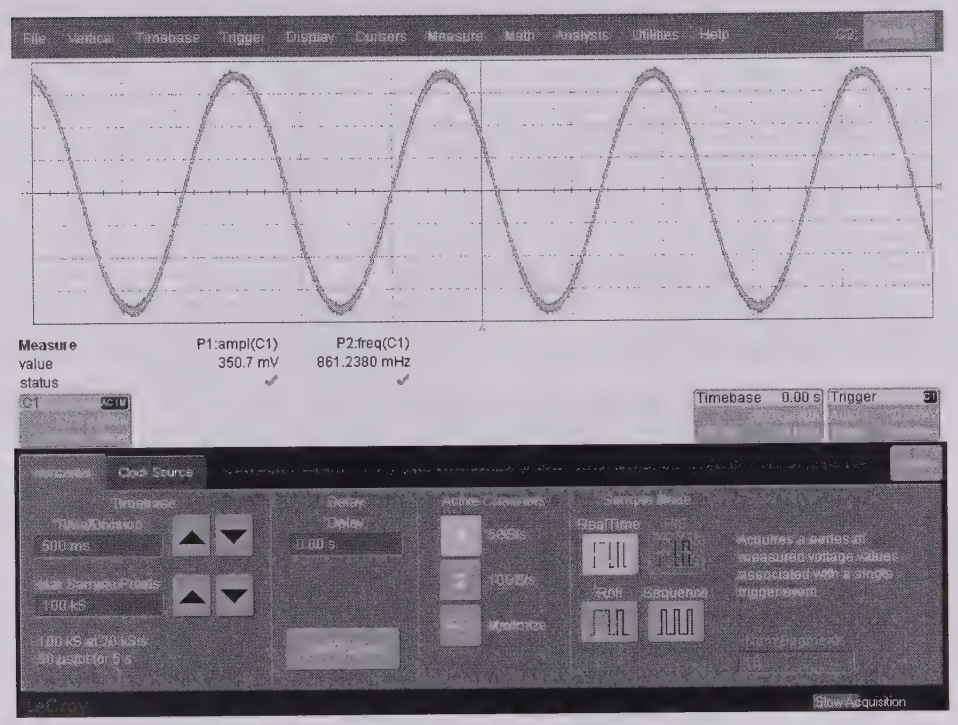
File Vertical Timebase Trigger Display Cursors Measure Math Analysis Utilities Help
Measure
value
status
P1:ampl(C1)
350.7 mV
P2:freq(C1)
861.2380 mHz
C1
Timebase 0.00 s
Trigger
Clock Source
Timebase
Time/Division
500 ms
Max Sample Points
100 kS
100 kS at 200 kS/s
50 µs/div to 5 s
Delay
0.00 s
RealTime
Roll
Sequence
Acquires a series of measured voltage values associated with a single trigger event.
LeCroy
Slow Acquisition

LeCroy Digital Storage Oscilloscope

Performance Certificate

WaveRunner 6K Manual Performance Test Procedure Version D – Feb. 2007

Model_____ Serial Number_____ Customer_____

Software Version_____

Inspection Date_____ Next Due_____

Temperature_____ Humidity_____%

Tested By_____ Report Number_____

Place of Inspection_____

Condition found_____ Condition Left_____

Approved By_____

Test Equipment Used

Instrument	Model	S/N	Cal Due Date
Signal Generator Radio Frequency	_____	_____	_____
Signal Generator Audio Frequency	_____	_____	_____
Voltage Generator DC Power Supply	_____	_____	_____
Digital Multimeter Voltmeter, Ohmmeter	_____	_____	_____

Traceable to_____

Table 1: WaveRunner Test Report

This page intentionally left blank

Coupling	Volts/div.	Measured Channel 1 Impedance Ω, MΩ	Measured Channel 2 Impedance Ω, MΩ	Measured Channel 3 Impedance Ω, MΩ	Measured Channel 4 Impedance Ω, MΩ	Measured External Impedance Ω, MΩ	Lower Limit Ω, MΩ	Upper Limit Ω, MΩ
DC 1MΩ	20 mV/div						0.9875 MΩ	1.0125 MΩ
DC 1MΩ	200 mV/div						0.9875 MΩ	1.0125 MΩ
DC 1MΩ	2 V/div						0.9875 MΩ	1.0125 MΩ
DC 50Ω	20 mV/div						49.25 Ω	50.75 Ω
DC 50Ω	200 mV/div						49.25 Ω	50.75 Ω
DC 50Ω							49.25 Ω	50.75 Ω
DC 1MΩ							0.9875 MΩ	1.0125 MΩ

Table 2: Impedance Test Record

Coupling	Volts/div.	Measured Channel 1 Leakage mV	Measured Channel 2 Leakage mV	Measured Channel 3 Leakage mV	Measured Channel 4 Leakage mV	Measured External Leakage mV	Lower Limit mV	Upper Limit mV
DC 1MΩ	20 mV/div						–2	+2
DC 1MΩ	200 mV/div						-2	+2
DC 1MΩ	2 V/div						–2	+2
DC 50Ω	20 mV/div						–2	+2
DC 50Ω	200 mV/div						–2	+2
DC 50Ω							–2	+2
DC 1MΩ							–2	+2

Table 3: Leakage Voltage Test Record

Coupling	Time/Div.	Measured Pkpk Channel 1 mV	Measured Pkpk Channel 2 mV	Measured Pkpk Channel 3 mV	Measured Pkpk Channel 4 mV	Limits pk-pk mV
DC 50Ω	1 µs					7.5
DC 50Ω	1 ms					7.5
DC 50Ω : 2 Channel Mode	0.5 µs					7.5

Table 4: Peak to Peak Noise Test Record

Volts /div.	Attenuator	P S Output	Measured Channel 1 V & mV			Measured Channel 2 V & mV			Measured Channel 3 V & mV			Measured Channel 4 V & mV			Limits
			DMM 1	Mean (A)	Δ 1 Mean–DMM	DMM 2	Mean (B)	Δ 2 Mean–DMM	DMM 3	Mean (C)	Δ 3 Mean–DMM	DMM 4	Mean (D)	Δ 4 Mean–DMM	mV
2 mV	X 100	+0.6 V													±2.3
5 mV	X 100	+1.5 V													±2.8
10 mV	X 100	+3.0 V													±3.6
.1 V	X 10	+3.0 V													±18
1 V	X 1	+3.0 V													±162

Table 5: DC 50Ω, Positive DC Accuracy Test Record

Volts /div.	Attenuator	P S Output	Measured Channel 1 V & mV			Measured Channel 2 V & mV			Measured Channel 3 V & mV			Measured Channel 4 V & mV			Limits
			DMM 1	Mean (A)	Δ 1 Mean–DMM	DMM 2	Mean (B)	Δ 2 Mean–DMM	DMM 3	Mean (C)	Δ 3 Mean–DMM	DMM 4	Mean (D)	Δ 4 Mean–DMM	mV
2 mV	X 100	+0.6 V													±2.3
5 mV	X 100	+1.5 V													±2.8
10 mV	X 100	+3.0 V													±3.6
.1 V	X 10	+3.0 V													±18
1 V	X 1	+3.0 V													±162

Table 6: DC 50Ω, Negative DC Accuracy Test Record

Volts /div.	Attenuator	P S Output	Measured Channel 1 V & mV			Measured Channel 2 V & mV			Measured Channel 3 V & mV			Measured Channel 4 V & mV			Limits
			DMM 1	Mean (A)	Δ 1 Mean–DMM	DMM 2	Mean (B)	Δ 2 Mean–DMM	DMM 3	Mean (C)	Δ 3 Mean–DMM	DMM 4	Mean (D)	Δ 4 Mean–DMM	mV
2 mV	X 100	+0.6 V													±2.3
5 mV	X 100	+1.5 V													±2.8
10 mV	X 100	+3.0 V													±3.6
200 mV	X 10	+6.0 V													±34
2 V	X 1	+6.0 V													±322

Table 7: DC 1MΩ, Positive DC Accuracy Test Record

Volts /div.	Attenuator	P S Output	Measured Channel 1 V & mV			Measured Channel 2 V & mV			Measured Channel 3 V & mV			Measured Channel 4 V & mV			Limits
			DMM 1	Mean (A)	Δ 1 Mean–DMM	DMM 2	Mean (B)	Δ 2 Mean–DMM	DMM 3	Mean (C)	Δ 3 Mean–DMM	DMM 4	Mean (D)	Δ 4 Mean–DMM	mV
2 mV	X 100	+0.6 V													±2.3
5 mV	X 100	+1.5 V													±2.8
10 mV	X 100	+3.0 V													±3.6
200 mV	X 10	+6.0 V													±34
2 V	X 1	+6.0 V													±322

Table 8: DC 1MΩ, Negative DC Accuracy Test Record

Volt /div.	Coupling DC	DSO Offset V	P S Output V	Measured Channel 1 V & mV			Measured Channel 2 V & mV			Measured Channel 3 V & mV			Measured Channel 4 V & mV			Limits
				DMM 1	Mean (A)	Δ 1 Mean–DMM	DMM 2	Mean (B)	Δ 2 Mean–DMM	DMM 3	Mean (C)	Δ 3 Mean–DMM	DMM 4	Mean (D)	Δ 4 Mean–DMM	mV
50mV	50 Ω	+.750	–.750													±14.2

Table 9: Positive 50Ω Offset Test Record

Volt /div.	Coupling DC	DSO Offset V	P S Output V	Measured Channel 1 V & mV			Measured Channel 2 V & mV			Measured Channel 3 V & mV			Measured Channel 4 V & mV			Limits
				DMM 1	Mean (A)	Δ 1 Mean–DMM	DMM 2	Mean (B)	Δ 2 Mean–DMM	DMM 3	Mean (C)	Δ 3 Mean–DMM	DMM 4	Mean (D)	Δ 4 Mean–DMM	mV
50mV	50 Ω	+.750	–.750													±14.2

Table 10: Negative 50Ω Offset Test Record

Volt /div.	Coupling DC	DSO Offset V	P S Output V	Measured Channel 1 V & mV			Measured Channel 2 V & mV			Measured Channel 3 V & mV			Measured Channel 4 V & mV			Limits
				DMM 1	Mean (A)	Δ 1 Mean–DMM	DMM 2	Mean (B)	Δ 2 Mean–DMM	DMM 3	Mean (C)	Δ 3 Mean–DMM	DMM 4	Mean (D)	Δ 4 Mean–DMM	mV
50mV	1 MΩ	+.750	–.750													±14.2

Table 11: Positive 1MΩ Offset Test Record

Volt /div.	Coupling DC	DSO Offset V	P S Output V	Measured Channel 1 V & mV			Measured Channel 2 V & mV			Measured Channel 3 V & mV			Measured Channel 4 V & mV			Limits
				DMM 1	Mean (A)	Δ 1 Mean–DMM	DMM 2	Mean (B)	Δ 2 Mean–DMM	DMM 3	Mean (C)	Δ 3 Mean–DMM	DMM 4	Mean (D)	Δ 4 Mean–DMM	mV
50mV	1 MΩ	+.750	–.750													±14.2

Table 12: Negative 1MΩ Offset Test Record

Frequency	Measured Power	Generator Amplitude	Measured Channel 1		Measured Channel 2		Measured Channel 3		Measured Channel 4		Lower Limit
MHz	μW	mV	Sdev(1) mV	Ratio(1) to 10	Sdev(2) mV	Ratio(2) to 10	Sdev(3) mV	Ratio(3) to 10	Sdev(4) mV	Ratio(4) to 10	
10	8.0			N/A		N/A		N/A		N/A	N/A
350.1 (WR 6030)	8.0										0.707
500.1 (WR 6050, 6051)	8.0										0.707
1000.1 (WR 6100)	8.0										0.707
2000.1 (WR 6200)	8.0										0.707

Table 13: DC 50Ω, 10 mV/div. Bandwidth Test Record

Frequency	Measured Power	Generator Amplitude	Measured Channel 1		Measured Channel 2		Measured Channel 3		Measured Channel 4		Lower Limit
MHz	mW	mV	Sdev(1) mV	Ratio(1) to 10	Sdev(2) mV	Ratio(2) to 10	Sdev(3) mV	Ratio(3) to 10	Sdev(4) mV	Ratio(4) to 10	
10	0.22			N/A		N/A		N/A		N/A	N/A
350.1 (WR 6030)	0.22										0.707
500.1 (WR 6050, 6051)	0.22										0.707
1000.1 (WR 6100)	0.22										0.707
2000.1 (WR 6200)	0.22										0.707

Table 14: DC 50Ω, 50 mV/div. Bandwidth Test Record

Frequency	Measured Power	Generator Amplitude	Measured Channel 1		Measured Channel 2		Measured Channel 3		Measured Channel 4		Lower Limit
MHz	mW	mV	Sdev(1) mV	Ratio(1) to 10	Sdev(2) mV	Ratio(2) to 10	Sdev(3) mV	Ratio(3) to 10	Sdev(4) mV	Ratio(4) to 10	
10	0.8			N/A		N/A		N/A		N/A	N/A
350.1 (WR 6030)	0.8										0.707
500.1 (WR 6050, 6051)	0.8										0.707
1000.1 (WR 6100)	0.8										0.707
2000.1 (WR 6200)	0.8										0.707

Table 15: DC 50Ω, 100 mV/div. Bandwidth Test Record

Frequency	Measured Power	Generator Amplitude	Measured Channel 1		Measured Channel 2		Measured Channel 3		Measured Channel 4		Lower Limit
MHz	mW	mV	Sdev(1) mV	Ratio(1) to 10	Sdev(2) mV	Ratio(2) to 10	Sdev(3) mV	Ratio(3) to 10	Sdev(4) mV	Ratio(4) to 10	
10	22.0			N/A		N/A		N/A		N/A	N/A
350.1 (WR 6030)	22.0										0.707
500.1 (WR 6050, 6051)	22.0										0.707
1000.1 (WR 6100)	22.0										0.707
2000.1 (WR 6200)	22.0										0.707

Table 16: DC 50Ω, 500mV/div. Bandwidth Test Record

Trigger Level	Trigger Slope	Channel 1	Channel 2	Channel 3	Channel 4	Lower Limit	Upper Limit
mV		Measured DC Trigger Level (1) mV	Measured DC Trigger Level (2) mV	Measured DC Trigger Level (3) mV	Measured DC Trigger Level (4) mV	mV	mV
0	Pos					–44	+44
0	Neg					–44	+44
+250	Pos					+218	+282
+250	Neg					+218	+282
–250	Pos					-282	-218
–250	Neg					-282	-218

Table 17: Channel DC Trigger Test Record

Generator Frequency MHz	Freq.(1) (Hz)	Lower Limit	Upper Limit
10.0		-50	+50

Table 20: Time Base Test Record

6. Maintenance

6.1 Introduction

This section contains information necessary to disassemble, assemble, maintain, calibrate and troubleshoot the LeCroy WaveRunner6000.

6.1.1 Safety Precautions

The symbol used in this manual indicates dangers that could result in personal injury.

The symbol used in this manual identifies conditions or practices that could damage the instrument.

The following servicing instructions are for use by qualified personnel only. Do not perform any servicing other than contained in service instructions. Refer to procedures prior to performing any service.

Exercise extreme safety when testing high energy power circuits. Always turn the power OFF, disconnect the power cord and discharge all capacitors before disassembling the instrument.

6.1.2 Anti-static Precautions

Any static charge that builds on your person or clothing may be sufficient to destroy CMOS components, integrated circuits, Gate array's.....etc.

In order to avoid possible damage, the usual precautions against static electricity are required.

- Handle the boards in anti-static boxes or containers with foam specially designed to prevent static build-up.
- Ground yourself with a suitable wrist strap.
- Disassemble the instrument at a properly grounded work station equipped with anti-static mat.
- When handling the boards, do not touch the pins.
- Stock the boards in anti-static bags.

6.2 Disassembly and Assembly Procedure

The disassembly and assembly procedures detailed below refer to the views of figures shown in section 8.

6.2.1 Disassembly Procedure

Please study the figures in section 8 before attempting disassembly. Before removing any parts from the LeCroy WaveRunner, be sure to read carefully the instructions referring to those parts, noting any precautions needed to avoid problems.

Note: Power is always present on the CPU motherboard and inside the Power Supply whenever the power cord is plugged into a power source. Remove the power cord from the instrument before removing or inserting any connectors to the CPU motherboard. Extreme caution should be taken in protecting the LCD face from damage (e.g. scratch marks, etc.) when handling, in particular when inserting or removing from the instrument.

a. Removal of the Upper Cover Assembly

The upper cover disassembly procedure refers to the view of figure 8-1.

Tools Needed:
- T15 Torx driver
- #2 Philips screwdriver

Procedure:

- Remove the front bezel (see procedure 6.2.1.a)
- Remove the twelve 6-32 x ¼" screws (five on right side, three on left side and four in the rear).
- Remove the two 6-32 x ½" screws that secure the two upper feet to the upper cover and rear panel.
- Carefully slide the upper cover off the unit. If the unit has an optional internal printer disconnect printer power cable and data cable.

b. Opening of the Front Bezel

The front bezel disassembly procedure refers to the view of figure 8-2.

Tools Needed:
- T10 Torx driver
- #1 Philips screwdriver

Procedure:

- Remove four 6-32 x 5/16" screws underneath the plastic bezel.
- Remove two 6-32 x ¼" screws (one on each side of the front frame near the bottom)

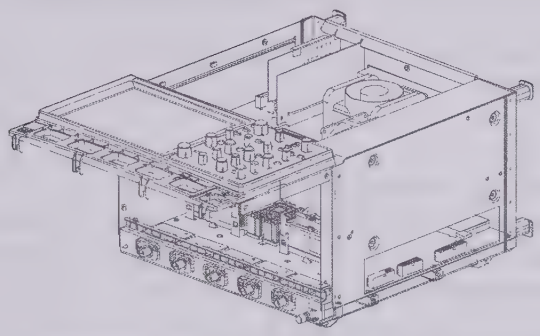

- The Front Frame can now be pivoted up to allow access for further instrument disassembly. Pay close attention to the power switch and spring as these will fall off once the front frame is pivoted away from chassis.

c. Removal of the Acquisition System Assembly

The Acquisition System removal procedure refers to the view of figure 8-1 & 8-4.

Tools Needed:

- #2 Philips screwdriver

Procedure:

- Remove the upper cover assembly (6.2.1.a)
- Open the front bezel (6.2.1.b)
- Disconnect the power connectors at J23, J19 and J15.
- Disconnect the USB cable at J26
- Disconnect the power switch cable at J24
- Disconnect the two ribbon cables from the PCI card at the acquisition board connectors J11 and J10.
- Remove the nine 6-32 x 5/16" screws through the bottom of the chassis.
- Gently slide the Acquisition board forward and disconnect the fan cable at J4 and the Triggered/Ready LED cable at J9000.

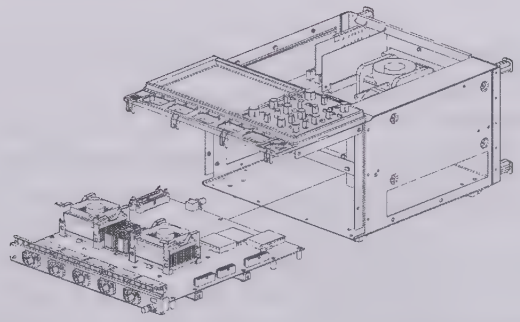

The acquisition system can now be removed from the oscilloscope.

d. Removal of the PCI Board

The PCI board removal procedure refers to the views of figure 8-5 and figure 8-9

Tools Needed:

- Diagonal cutting pliers

Procedure:

- Remove the upper cover assembly (6.2.1.a)
- Disconnect the two ribbon cables at J1 and J2 of the PCI card.
- Cut the cable clamp which secures the PCI card to the motherboard.
- Unplug the PCI card from the processor board.

e. Removal of the AGP-DVO Interface Board

The AGP-DVO removal procedure refers to the views of figure 8-5 and figure 8-9

Tools Needed:

- none

Procedure:

- Remove the upper cover assembly (6.2.1.a)
- Disconnect the video cable at J1 of the DVO Card.
- Disconnect the inverter power cable at J2.
- Bend the spring clamp on the AGP connector on the processor card slightly to disengage the lock to the AGP/DVO card.
- Unplug the AGP/DVO card from the processor board.

f. Removal of the Processor Board

The processor board disassembly procedure refers to the views of figure 8-7 and figure 8-9.

Tools Needed:

- #1 Philips screwdriver

Procedure:

- Remove the upper cover assembly (6.2.1.a)
- Remove the PCI card (6.2.1.d)
- Remove the AGP/DVI Interface (6.2.1.e).
- Disconnect the following cables on the processor board:

Processor Connector	Connects to
Primary IDE	Hard Drive
Secondary IDE	CD ROM drive
Main Power	Power supply harness
Supplemental Processor Power	Power supply harness
Front Panel USB	USB Hub & Acq Board
Front Panel Header	Power Switch – Acq Board

- Remove six 6-32 x ¼" screws which secure the processor card to the processor tray.
- Remove the processor board.

g. Removal of the Hard Disk Drive

The hard disk drive removal procedure refers to the view of figure 8-7 and 8-9.

Tools Needed:
- #1 Philips screwdriver

Procedure:

- Note: Critical files need to be backed up the disk drive is to be removed from the instrument. Refer to section 6.6 for instructions.
- Remove the upper cover assembly (6.2.1.a)
- Remove the PCI card (6.2.1.d)
- Remove the AGP/DVI Interface (6.2.1.e).
- Remove the processor card (6.2.1.f)
- Disconnect the power cable and ribbon cable from the hard disk drive.
- Remove the four 6-32 x 3/16" screws which secure the hard disk to the processor tray.
- Remove the hard disk drive from the unit

h. Removal of the CD ROM Drive

The CD ROM drive disassembly procedure refers to the view of figure 8-7, figure 8-8 and figure 8-9.

Tools Needed:
- T6 Torx driver
- T10 Torx driver
- T25 Torx driver

Procedure:

- Remove the upper cover assembly (6.2.1.a)
- Disconnect the ribbon cable and power cable from the CD ROM adapter board.
- Remove four 6-32 x ¼" screws which secure the CD ROM drive assembly to the chassis (two on rear, two on the right side)
- Remove the CD ROM drive assembly from the chassis.
- Remove the CD ROM adapter from the rear of the CD ROM drive by removing the two M2X6 screws.
- Remove the CD ROM Drive interface board from the CD ROM drive
- Remove four 6-32 x ¼" screws which secure the CD ROM drive to the CD ROM bracket.
- Remove the CD ROM Drive from the bracket.

i. Removal of the Power Supply

The power supply fan removal procedure refers to the views of figure 8-6.

Tools Needed:
- T15 Torx driver

Procedure:

- Remove the upper cover assembly (6.2.1.a)
- Disconnect the two power connectors to the processor board.
- Disconnect the power connector at the Hub board.
- Disconnect the power connectors at the CD-ROM and Hard Disk.
- Disconnect the three power connectors at the acquisition board.
- Remove the six 6-32 x ¼" screws which secure the power supply to the chassis (four on the side and two in the rear.
- Remove the power supply from the unit.

j. Removal of the Front Frame Assembly

The front frame removal procedure refers to the views of figure 8-5.

Tools Needed:
- T10 Torx driver

Procedure:

- Remove the upper cover assembly (6.2.1.a)
- Open the front bezel (6.2.1.b)
- Disconnect the video cable at J1 of the PCI card.
- Disconnect the inverter power cable at J2 of the PCI card.
- Disconnect the Trig/Ready LED at J1 of the USB Hub.
- Disconnect the USB cable at J3 of the USB Hub.
- Disconnect the power cable at P2 of the USB Hub.
- Remove two 6-32 x ¼" screws at the top location on each side of the front frame assy.
- Remove the front frame assembly from the chassis.

k. Removal of the Front Panel Encoder Board

The front panel encoder board removal procedure refers to the views of figure 8-4 and figure 8-13.

Tools Needed:
- T10 Torx driver
- T25 Torx driver
- ½" nut driver

Procedure:

- Remove the upper cover assembly (6.2.1.a)
- Open the front bezel (6.2.1.b)
- Remove the front frame assembly (6.2.1.j)
- Disconnect the ribbon cable from Jx of the USB Hub to the encoder board.
- Remove the six 4-40 x ¼" screws which secure the front bezel to the front frame assy.
- Remove the knobs from the encoders.
- Remove the front bezel.
- Remove nine M2.5 x.4-6mm screws which secure the encoder assembly to the front bezel.
- Remove the front panel encoder board and elastomeric keypad from the bezel.

l. Removal of the USB Hub Board

The front panel encoder board removal procedure refers to the views of figure 8-4, and figure 8-16.

Tools Needed:
- T10 Torx driver
- T25 Torx driver
- ½" nut driver

Procedure:

- Remove the upper cover assembly (6.2.1.a)
- Open the front bezel (6.2.1.b)
- Tilt the unit on its side.
- Disconnect the cables to the USB Hub board.
- Disconnect the eight screws (five 4-40 x ¼" and three 4-40 x 3/8")
- Remove the USB board.

m. Removal of the Display Inverter Board

The display inverter removal procedure refers to the view of figure 8-4 & 8-16.

Tools Needed:

- T6 Torx driver
- T10 Torx driver
- T25 Torx driver

Procedure:

- Remove the upper cover assembly (6.2.1.a)
- Open the front bezel (6.2.1.b)
- Tilt the unit on its side.
- Remove the four 4-40 x ¼" screws which secure the Inverter cover to the front frame.
- Disconnect LCD Display power cable cables from DC-AC Inverter board
- Disconnect the inverter power cable from the inverter board.
- Remove the two 4-40 x ¼" screws which secure the inverter to the front frame.
- Pay close attention to the two small standoffs which are behind the inverter board and come off when the screws are removed.

n. Removal of the Display and Touchscreen

The display and touchscreen removal procedure refers to the view of figure 8-4, figure 8-15 and figure 8-16.

Tools Needed:

- T10 Torx driver
- T25 Torx driver

Procedure:

- Remove the upper cover assembly (6.2.1.a)
- Open the front bezel (6.2.1.b)
- Remove the front frame assembly (6.2.1.j)
- Disconnect the ribbon cable from P1 of the USB Hub to the encoder board.
- Remove the six 4-40 x ¼" screws which secure the front bezel to the front frame assy.
- Remove the knobs from the encoders.
- Remove the front bezel.
- Remove the four 4-40 x ¼" screws which secure the Inverter cover to the front frame.
- Disconnect the TFT power wires from the DC-DC inverter board.
- Remove the four 4-40 x ¼" screws which secure the display and touchscreen to the chassis.
- Remove the display and touchscreen from the chassis paying close attention to the wires as they pass through the chassis opening.

o. Replacing the Battery

A coin-cell battery (CR2032) powers the real-time clock and CMOS memory. When the computer is not plugged into a wall socket, the battery has an estimated life of three years. When the computer is plugged in, the standby current from the power supply extends the life of the battery. The clock is accurate to ±13 minutes/year at 25 °C with 3.3 VSB applied. When the voltage drops below a certain level, the BIOS Setup program settings stored in CMOS RAM (for example, the date and time) might not be accurate. Replace the battery with an equivalent one.

To replace the battery, follow these steps:

1. Turn off all peripheral devices connected to the computer. Disconnect the computer's power cord from the AC power source (wall outlet or power adapter).
2. Remove the top cover.
3. Locate the battery on the board.
4. With a medium flat-bladed screwdriver, gently pry the battery free from its connector. Note the orientation of the "+" and "-" on the battery.
5. Install the new battery in the connector, orienting the "+" and "-" correctly.
6. Replace the top cover.

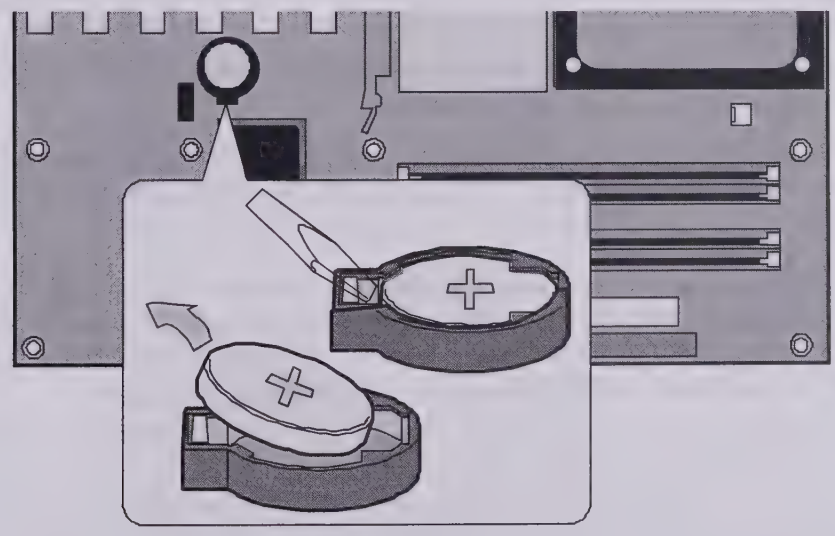

Assembly Procedure

Reassemble the unit in the reverse order, check that all screws shown on the drawings in section 8 are used and have the proper torque. Verify that all cables are correctly connected.

Assembly Note :

- **Bezel** : The plastic bezel should not be in contact with the touch screen.
- **Fans** : Check the fan air flow, the fans blow air down into the unit.
- **Feet** : Check that the lower feet and rear feet are aligned and properly tightened before re-assembly.
- **CD**: Check that the tray moves freely and shuts correctly. Insert a CD and eject it to check the mechanism.
- **Front Panel** : Check that knobs rotate freely, are the right size and in the right place.
- **Acquisition Board** : Make sure that no heatsinks get knocked from their fully seated position as intimate contact is required between the heatsink and the devices.
- **Processor** : Check that all of the cables are correctly inserted. The BIOS must be flashed if new CPU card is installed.
- **Printer** : If the graphic printer is used, before closing the top cover don't forget to plug the input power cable to the option and the driver cable to the USB Hub card.
- **Hard Drive** – Hard Drive image will need to be restored (depends on version of CPU motherboard) Touch Screen calibration will need to be performed if hard drive is replaced. Critical files will need to be restored (see section 6.6) or full factory calibration performed.
- **PCI Card** – If board is replaced, software keys for software option licensing and model identification will need to be reissued.
- **USB Hub Card** – Make sure that video cable to TFT is tie-wrapped to the mounting block.

6.2.2 Installing Hardware Options

6.3 Software Update Procedure

6.3.1 Installing New X-Stream DSO Application Software

In order to load new X-Stream DSO software the system must be capable of booting up to the Windows desktop.

- If the Wavemaster application is running, exit it through the File, Exit menu option.
- Insert the CD ROM containing the version to be installed into the CD ROM drive.
- From the windows desktop, select My Computer, then select the CD ROM drive.
- Launch XStreamDSOInstallerx.x.x.x.exe (where x.x.x.x is the version number) application.

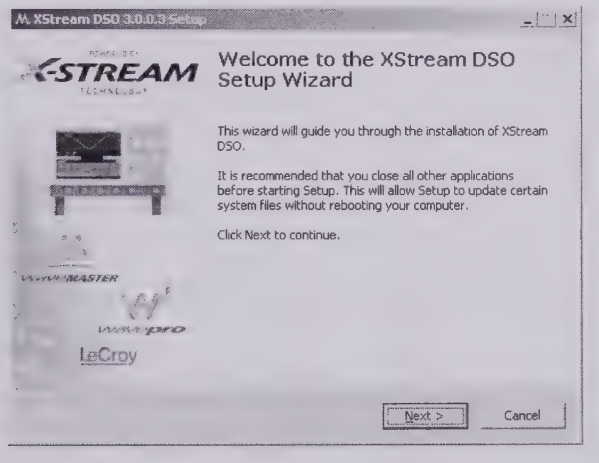

- Press Next, You will be prompted to read and accept the software license agreement.

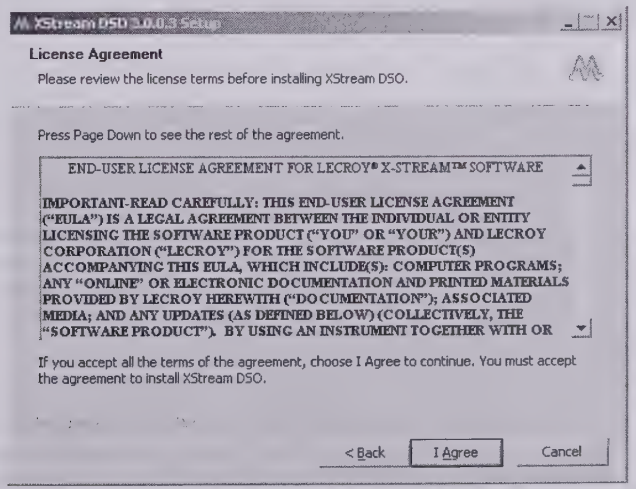

6.3.2 Software End User License Agreement

END-USER LICENSE AGREEMENT FOR LECROY® X-STREAM™ SOFTWARE

IMPORTANT-READ CAREFULLY: THIS END-USER LICENSE AGREEMENT ("EULA") IS A LEGAL AGREEMENT BETWEEN THE INDIVIDUAL OR ENTITY LICENSING THE SOFTWARE PRODUCT ("YOU" OR "YOUR") AND LECROY CORPORATION ("LECROY") FOR THE SOFTWARE PRODUCT(S) ACCOMPANYING THIS EULA, WHICH INCLUDE(S): COMPUTER PROGRAMS; ANY "ONLINE" OR ELECTRONIC DOCUMENTATION AND PRINTED MATERIALS PROVIDED BY LECROY HEREWITH ("DOCUMENTATION"); ASSOCIATED MEDIA; AND ANY UPDATES (AS DEFINED BELOW) (COLLECTIVELY, THE "SOFTWARE PRODUCT"). BY USING AN INSTRUMENT TOGETHER WITH OR CONTAINING THE SOFTWARE PRODUCT, OR BY INSTALLING, COPYING, OR OTHERWISE USING THE SOFTWARE PRODUCT, IN WHOLE OR IN PART, YOU AGREE TO BE BOUND BY THE TERMS OF THIS EULA. IF YOU DO NOT AGREE TO THE TERMS OF THIS EULA, DO NOT INSTALL, COPY, OR OTHERWISE USE THE SOFTWARE PRODUCT; YOU MAY RETURN THE SOFTWARE PRODUCT TO YOUR PLACE OF PURCHASE FOR A FULL REFUND. IN ADDITION, BY INSTALLING, COPYING, OR OTHERWISE USING ANY MODIFICATIONS, ENHANCEMENTS, NEW VERSIONS, BUG FIXES, OR OTHER COMPONENTS OF THE SOFTWARE PRODUCT THAT LECROY PROVIDES TO YOU SEPARATELY AS PART OF THE SOFTWARE PRODUCT ("UPDATES"), YOU AGREE TO BE BOUND BY ANY ADDITIONAL LICENSE TERMS THAT ACCOMPANY SUCH UPDATES. IF YOU DO NOT AGREE TO SUCH ADDITIONAL LICENSE TERMS, YOU MAY NOT INSTALL, COPY, OR OTHERWISE USE SUCH UPDATES.

THE PARTIES CONFIRM THAT THIS AGREEMENT AND ALL RELATED DOCUMENTATION ARE AND WILL BE DRAFTED IN ENGLISH. LES PARTIES AUX PRÉSENTÉS CONFIRMENT LEUR VOLONTÉ QUE CETTE CONVENTION DE MÊME QUE TOUS LES DOCUMENTS Y COMPRIS TOUT AVIS QUI S'Y RATTACHÉ, SOIENT REDIGÉS EN LANGUE ANGLAISE.

1. GRANT OF LICENSE.

1.1 License Grant. Subject to the terms and conditions of this EULA and payment of all applicable fees, LeCroy grants to you a nonexclusive, nontransferable license (the "License") to: (a) operate the Software Product as provided or installed, in object code form, for your own internal business purposes, (i) for use in or with an instrument provided or manufactured by LeCroy (an "Instrument"), (ii) for testing your software product(s) (to be used solely by you) that are designed to operate in conjunction with an Instrument ("Your Software"), and (iii) make one copy for archival and back-up purposes; (b) make and use copies of the Documentation; provided that such copies will be used only in connection with your licensed use of the Software Product, and such copies may not be republished or distributed (either in hard copy or electronic form) to any third party; and (c) copy, modify, enhance and prepare derivative works ("Derivatives") of the source code version of those portions of the Software Product set forth in and identified in the Documentation as "Samples" ("Sample Code") for the sole purposes of designing, developing, and testing Your Software. If you are an entity, only one designated individual within your organization, as designated by you, may exercise the License; provided that additional individuals within your organization may assist with respect to reproducing and distributing Sample Code as permitted under Section 1.1(c)(ii). LeCroy reserves all rights not expressly granted to you. No license is granted hereunder for any use other than that specified herein, and no license is granted for any use in combination or in connection with other products or services (other than Instruments and Your Software) without the express prior written consent of LeCroy. The Software Product is licensed as a single product. Its component parts may not be separated for use by more than one user. This EULA does not grant you any rights in connection with any trademarks or service marks of LeCroy. The Software Product is protected by copyright laws and international copyright treaties, as well as other intellectual property laws and treaties. The Software Product is licensed, not sold. The terms of this printed, paper EULA supersede the terms of any on-screen license agreement found within the Software Product.

1.2 Upgrades. If the Software Product is labeled as an "upgrade," (or other similar designation) the License will not take effect, and you will have no right to use or access the Software Product unless you are properly licensed to use a product identified by LeCroy as being eligible for the upgrade ("Underlying Product"). A Software Product labeled as an "upgrade" replaces and/or supplements the Underlying Product. You may use the resulting upgraded product only in accordance with the terms of this EULA. If the Software Product is an upgrade of a component of a package of software programs that you licensed as a single product, the Software Product may be used and transferred only as part of that single product package and may not be separated for use on more than one computer.

1.3. Limitations. Except as specifically permitted in this EULA, you will not directly or indirectly (a) use any Confidential Information to create any software or documentation that is similar to any of the Software Product or Documentation; (b) encumber, transfer, rent, lease, time-share or use the Software Product in any service bureau arrangement; (c) copy (except for archival purposes), distribute, manufacture, adapt, create derivative works of, translate, localize, port or otherwise modify the Software Product or the Documentation; (d) permit access to the Software Product by any party developing, marketing or planning to develop or market any product having functionality similar to or competitive with the Software Product; (e) publish benchmark results relating to the Software Product, nor disclose Software Product features, errors or bugs to third parties; or (f) permit any third party to engage in any of the acts proscribed in clauses (a) through (e). In jurisdictions in which transfer is permitted, notwithstanding the foregoing prohibition, transfers will only be effective if you transfer a copy of this EULA, as well as all copies of the Software Product, whereupon your right to use the Software product will terminate. Except as described in this Section 1.3, You are not permitted (i) to decompile, disassemble, reverse compile, reverse assemble, reverse translate or otherwise reverse engineer the Software Product, (ii) to use any similar means to discover the source code of the Software Product or to discover the trade secrets in the Software Product, or (iii) to otherwise circumvent any technological measure that controls access to the Software Product. You may reverse engineer or otherwise circumvent the technological measures protecting the Software Product for the sole purpose of identifying and analyzing those elements that are necessary to achieve Interoperability (the "Permitted Objective") only if: (A) doing so is necessary to achieve the Permitted Objective and it does not constitute

infringement under Title 17 of the United States Code; (B) such circumvention is confined to those parts of the Software Product and to such acts as are necessary to achieve the Permitted Objective; (C) the information to be gained thereby has not already been made readily available to you or has not been provided by LeCroy within a reasonable time after a written request by you to LeCroy to provide such information; (D) the information gained is not used for any purpose other than the Permitted Objective and is not disclosed to any other person except as may be necessary to achieve the Permitted Objective; and (E) the information obtained is not used (1) to create a computer program substantially similar in its expression to the Software Product including, but not limited to, expressions of the Software Product in other computer languages, or (2) for any other act restricted by LeCroy's intellectual property rights in the Software Product. "Interoperability" will have the same meaning in this EULA as defined in the Digital Millennium Copyright Act, 17 U.S.C. §1201(f), the ability of computer programs to exchange information and of such programs mutually to use the information which has been exchanged.

2. SUPPORT SERVICES. At LeCroy's sole discretion, from time to time, LeCroy may provide Updates to the Software Product. LeCroy shall have no obligation to revise or update the Software Product or to support any version of the Software Product. At LeCroy's sole discretion, upon your request, LeCroy may provide you with support services related to the Software Product ("Support Services") pursuant to the LeCroy policies and programs described in the Documentation or otherwise then in effect, and such Support Services will be subject to LeCroy's then-current fees therefor, if any. Any Update or other supplemental software code provided to you pursuant to the Support Services will be considered part of the Software Product and will be subject to the terms and conditions of this EULA. LeCroy may use any technical information you provide to LeCroy during LeCroy's provision of Support Services, for LeCroy's business purposes, including for product support and development. LeCroy will not utilize such technical information in a form that personally identifies you.

3. PROPRIETARY RIGHTS.

3.1 Right and Title. All right, title and interest in and to the Software Product and Documentation (including but not limited to any intellectual property or other proprietary rights, images, icons, photographs, text, and "applets" embodied in or incorporated into the Software Product, collectively, "Content"), and all Derivatives, and any copies thereof are owned by LeCroy and/or its licensors or third-party suppliers, and is protected by applicable copyright or other intellectual property laws and treaties. You will not take any action inconsistent with such title and ownership. This EULA grants you no rights to use such Content outside of the proper exercise of the license granted hereunder, and LeCroy will not be responsible or liable therefor.

3.2 Intellectual Property Protection. You may not alter or remove any printed or on-screen copyright, trade secret, proprietary or other legal notices contained on or in copies of the Software Product or Documentation.

3.3 Confidentiality. Except for the specific rights granted by this EULA, neither party shall use or disclose any Confidential Information (as defined below) of the other party without the written consent of the disclosing party. A party receiving Confidential Information from the other shall use the highest commercially reasonable degree of care to protect the Confidential Information, including ensuring that its employees and consultants with access to such Confidential Information have agreed in writing not to disclose the Confidential Information. You shall bear the responsibility for any breaches of confidentiality by your employees and consultants. Within ten (10) days after request of the disclosing party, and in the disclosing party's sole discretion, the receiving party shall either return to the disclosing party originals and copies of any Confidential Information and all information, records and materials developed therefrom by the receiving party, or destroy the same, other than such Confidential Information as to which this EULA expressly provides a continuing right to the receiving party to retain at the time of the request. Either party may only disclose the general nature, but not the specific financial terms, of this EULA without the prior consent of the other party; provided either party may provide a copy of this EULA to any finance provider in conjunction with a financing transaction, if such provider agrees to keep this EULA confidential. Nothing herein shall prevent a receiving party from disclosing all or part of the Confidential Information as necessary pursuant to the lawful requirement of a governmental agency or when disclosure is required by operation of law; provided that prior to any such disclosure, the receiving party shall use reasonable efforts to (a) promptly notify the disclosing party in writing of such requirement to disclose, and (b) cooperate fully with the disclosing party in protecting against any such disclosure or obtaining a protective order. Money damages will not be an adequate remedy if this Section 4.3 is breached and, therefore, either party shall, in addition to any other legal or equitable remedies, be entitled to seek an injunction or similar equitable relief against such breach or threatened breach without the necessity of posting any bond. As used herein, "Confidential Information" means LeCroy pricing or information concerning new LeCroy products, trade secrets (including without limitation all internal header information contained in or created by the Software Product, all benchmark and performance test results and all Documentation) and other proprietary information of LeCroy; and any business, marketing or technical information disclosed by LeCroy, or its representatives, or you in relation to this EULA, and either (i) disclosed in writing and marked as confidential at the time of disclosure or (ii) disclosed in any other manner such that a reasonable person would understand the nature and confidentiality of the information. Confidential Information does not include information (A) already in the possession of the receiving party without an obligation of confidentiality to the disclosing party, (B) hereafter rightfully furnished to the receiving party by a third party without a breach of any separate nondisclosure obligation to the disclosing party, (C) publicly known without breach of this EULA, (d) furnished by the disclosing party to a third party without restriction on subsequent disclosure, or (e) independently developed by the receiving party without reference to or reliance on the Confidential Information.

4. TERMINATION. This EULA will remain in force until termination pursuant to the terms hereof. You may terminate this EULA at any time. This EULA will also terminate if you breach any of the terms or conditions of this EULA. You agree that if this EULA terminates for any reason, the License will immediately terminate and you will destroy all copies of the Software Product (and all Derivatives), installed or otherwise, the Documentation, and the Confidential Information (and all derivatives of any of the foregoing) that are in your possession or under your control. The provisions of Sections 1.3, 4, 6, 7, 8, and 9 will survive any termination or expiration hereof.

5. U.S. GOVERNMENT RESTRICTED RIGHTS. If any Software Product or Documentation is acquired by or on behalf of a unit or agency of the United States Government (any such unit or agency, the "Government"), the Government agrees that the Software Product or Documentation is "commercial computer software" or "commercial computer software documentation" and that, absent a written agreement to the contrary, the Government's rights with respect to the Software Product or Documentation are, in the case of civilian agency use, Restricted Rights, as defined in FAR §52.227.19, and if for Department of Defense use, limited by the terms of this EULA, pursuant to DFARS §227.7202. The use of the Software Product or Documentation by the Government constitutes acknowledgment of LeCroy's proprietary rights in the Software Product and Documentation. Manufacturer is LeCroy Corporation, 700 Chestnut Ridge Road, Chestnut Ridge, NY 10977 USA.

6. EXPORT RESTRICTIONS. You agree that you will not export or re-export the Software Product, any part thereof, or any process or service that is the direct product of the Software Product (the foregoing collectively referred to as the "Restricted Components"), to any country, person, entity or end user subject to U.S. export restrictions. You specifically agree not to export or re-export any of the Restricted Components (a) to any country to which the U.S. has embargoed or restricted the export of goods or services, which currently include, but are not necessarily limited to Cuba, Iran, Iraq, Libya, North Korea, Sudan and Syria, or to any national of any such country, wherever located, who intends to transmit or transport the Restricted Components back to such country; (b) to any end user who you know or have reason to know will utilize the Restricted Components in the design, development or production of nuclear, chemical or biological weapons; or (c) to any end-user who has been prohibited from participating in U.S. export transactions by any federal agency of the U.S. government. You warrant and represent that neither the BXA nor any other U.S. federal agency has suspended, revoked or denied your export privileges. It is your responsibility to comply with the latest United States export regulations, and you will defend and indemnify LeCroy from and against any damages, fines, penalties, assessments, liabilities, costs and expenses (including reasonable attorneys' fees and court costs) arising out of any claim that the Software Product, Documentation, or other information or materials provided by LeCroy hereunder were exported or otherwise accessed, shipped or transported in violation of applicable laws and regulations.

8. RISK ALLOCATION.

8.1 No Warranty. THE SOFTWARE PRODUCT IS NOT ERROR-FREE AND THE SOFTWARE PRODUCT AND SUPPORT SERVICES IS/ARE BEING PROVIDED "AS IS" WITHOUT WARRANTY OF ANY KIND. LECROY, FOR ITSELF AND ITS SUPPLIERS, HEREBY DISCLAIMS ALL WARRANTIES, WHETHER EXPRESS OR IMPLIED, ORAL OR WRITTEN, WITH RESPECT TO THE SOFTWARE PRODUCT OR ANY SUPPORT SERVICES INCLUDING, WITHOUT LIMITATION, ALL IMPLIED WARRANTIES OF TITLE OR NON-INFRINGEMENT, MERCHANTABILITY, FITNESS FOR A PARTICULAR PURPOSE, ACCURACY, INTEGRATION, VALIDITY, EXCLUSIVITY, MERCHANTABILITY, NON-INTERFERENCE WITH ENJOYMENT, FITNESS FOR ANY PARTICULAR PURPOSE, AND ALL WARRANTIES IMPLIED FROM ANY COURSE OF DEALING OR USAGE OF TRADE. YOU ACKNOWLEDGE THAT NO WARRANTIES HAVE BEEN MADE TO YOU BY OR ON BEHALF OF LECROY OR OTHERWISE FORM THE BASIS FOR THE BARGAIN BETWEEN THE PARTIES.

8.2. Limitation of Liability. LECROY'S LIABILITY FOR DAMAGES FOR ANY CAUSE WHATSOEVER, REGARDLESS OF THE FORM OF ANY CLAIM OR ACTION, SHALL NOT EXCEED THE GREATER OF THE AMOUNT ACTUALLY PAID BY YOU FOR THE SOFTWARE PRODUCT OR U.S.$5.00; PROVIDED THAT IF YOU HAVE ENTERED INTO A SUPPORT SERVICES AGREEMENT WITH LECROY, LECROY'S ENTIRE LIABILITY REGARDING SUPPORT SERVICES WILL BE GOVERNED BY THE TERMS OF THAT AGREEMENT. LECROY SHALL NOT BE LIABLE FOR ANY LOSS OF PROFITS, LOSS OF USE, LOSS OF DATA, INTERRUPTION OF BUSINESS, NOR FOR INDIRECT, SPECIAL, INCIDENTAL, CONSEQUENTIAL OR EXEMPLARY DAMAGES OF ANY KIND, WHETHER UNDER THIS EULA OR OTHERWISE ARISING IN ANY WAY IN CONNECTION WITH THE SOFTWARE PRODUCT, THE DOCUMENTATION OR THIS EULA. SOME JURISDICTIONS DO NOT ALLOW THE EXCLUSION OR LIMITATION OF INCIDENTAL OR CONSEQUENTIAL DAMAGES, SO THE ABOVE EXCLUSION OR LIMITATION MAY NOT APPLY TO YOU. THESE LIMITATIONS ARE INDEPENDENT FROM ALL OTHER PROVISIONS OF THIS EULA AND SHALL APPLY NOTWITHSTANDING THE FAILURE OF ANY REMEDY PROVIDED HEREIN.

8.3 Indemnification. You will defend, indemnify and hold harmless LeCroy and its officers, directors, affiliates, contractors, agents, and employees from, against and in respect of any and all assessments, damages, deficiencies, judgments, losses, obligations and liabilities (including costs of collection and reasonable attorneys' fees, expert witness fees and expenses) imposed upon or suffered or incurred by them arising from or related to your use of the Software Product.

9. GENERAL PROVISIONS.

9.1 Compliance with Laws. You will comply with all laws, legislation, rules, regulations, and governmental requirements with respect to the Software Product, and the performance by you of your obligations hereunder, of any jurisdiction in or from which you directly or indirectly cause the Software Product to be used or accessed.

9.2 No Agency. Nothing contained in this EULA will be deemed to constitute either party as the agent or representative of the other party, or both parties as joint venturers or partners for any purpose.

9.3 Entire Agreement; Waiver; Severability. This EULA constitutes the entire agreement between the parties with regard to the subject matter hereof. No provision of, right, power or privilege under this EULA will be deemed to have been waived by any act, delay, omission or acquiescence by LeCroy, its agents, or employees, but only by an instrument in writing signed by an authorized officer of LeCroy. No waiver by LeCroy of any breach or default of any provision of this EULA by you will be effective as to any other breach or default, whether of the same or any other provision and whether occurring prior to, concurrent with, or subsequent to the date of such

waiver. If any provision of this EULA is declared by a court of competent jurisdiction to be invalid, illegal or unenforceable, such provision will be severed from this EULA and all the other provisions will remain in full force and effect.

9.4 Governing Law; Jurisdiction; Venue. This EULA will be governed by and construed in accordance with the laws of the State of New York, USA, without regard to its choice of law provisions. The United Nations Convention on Contracts for the International Sale of Goods will not apply to this EULA. Exclusive jurisdiction and venue for any litigation arising under this EULA is in the federal and state courts located in New York, New York, USA and both parties hereby consent to such jurisdiction and venue for this purpose.

9.5 Assignment. This EULA and the rights and obligations hereunder, may not be assigned, in whole or in part by you, except to a successor to the whole of your business, without the prior written consent of LeCroy. In the case of any permitted assignment or transfer of or under this EULA, this EULA or the relevant provisions will be binding upon, and inure to the benefit of, the successors, executors, heirs, representatives, administrators and assigns of the parties hereto.

9.6 Notices. All notices or other communications between LeCroy and you under this EULA will be in writing and delivered personally, sent by confirmed fax, by confirmed e-mail, by certified mail, postage prepaid and return receipt requested, or by a nationally recognized express delivery service. All notices will be in English and will be effective upon receipt.

9.7 Headings. The headings used in this EULA are intended for convenience only and will not be deemed to supersede or modify any provisions.

9.8 Acknowledgment. Licensee acknowledges that (a) it has read and understands this EULA, (b) it has had an opportunity to have its legal counsel review this EULA, (c) this EULA has the same force and effect as a signed agreement, and (d) issuance of this EULA does not constitute general publication of the Software Product or other Confidential Information.

- Accept the agreement and press Next. The software installation process will begin and a progress bar will be displayed. Wait until completion.

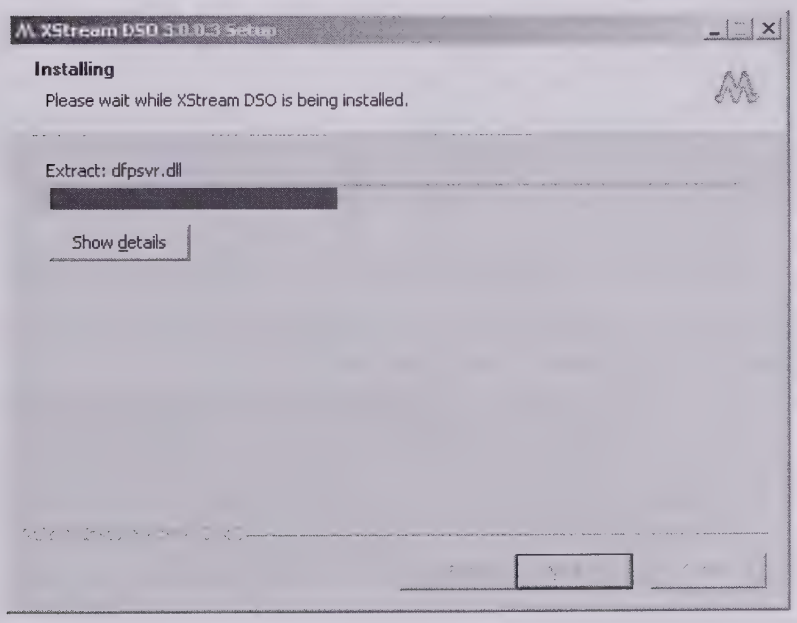

- At the completion on the software installation you will receive a dialog box as shown below:

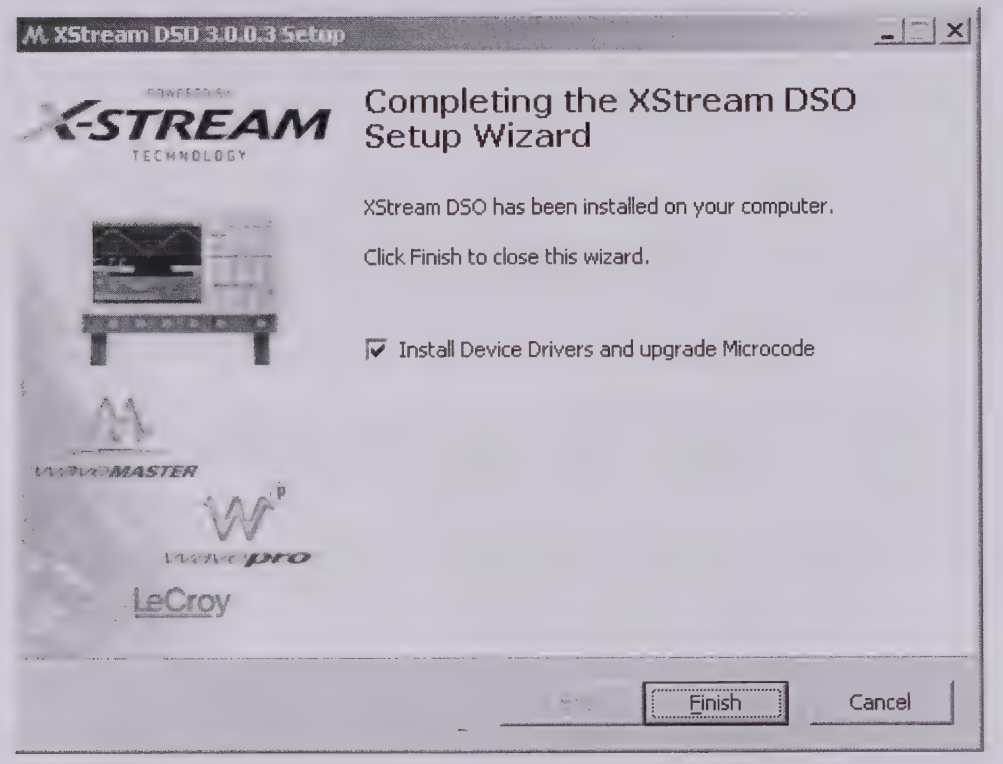

- The check box should be checked to install the Windows device drivers and to upgrade the Microcode in the instrument.

6.3.3 Installing Device Drivers

- Pressing finish will first install the device drivers. You will be prompted with a dialog box as shown below:

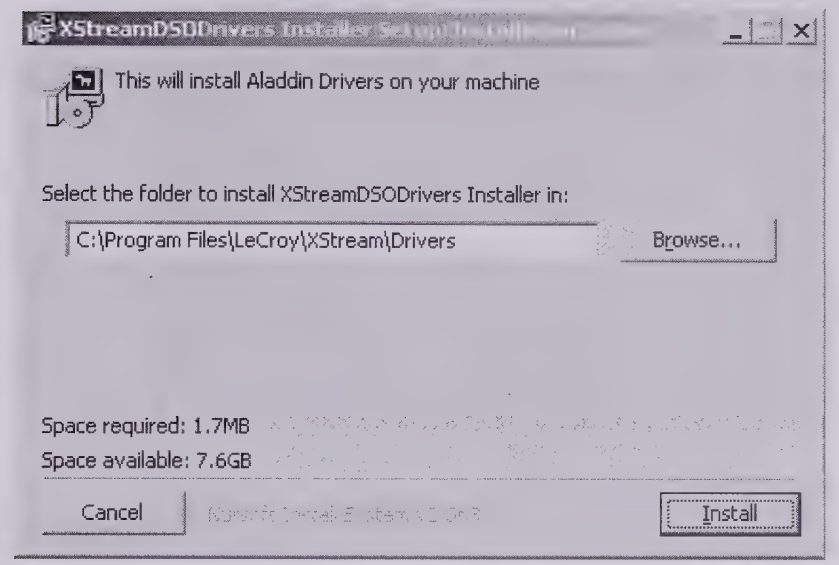

- Press Install, several new windows will open like shown below, it will take approximately 30 seconds for the drivers to be installed. A Found New Hardware Dialog Box may appear. DO NOT INTERVENE. The installer will automatically close this dialog box after a few seconds and the drivers will be installed.

Several found new hardware boxes will momentarily appear, no intervention is required.

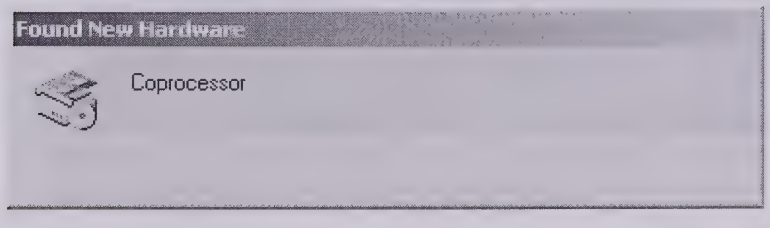

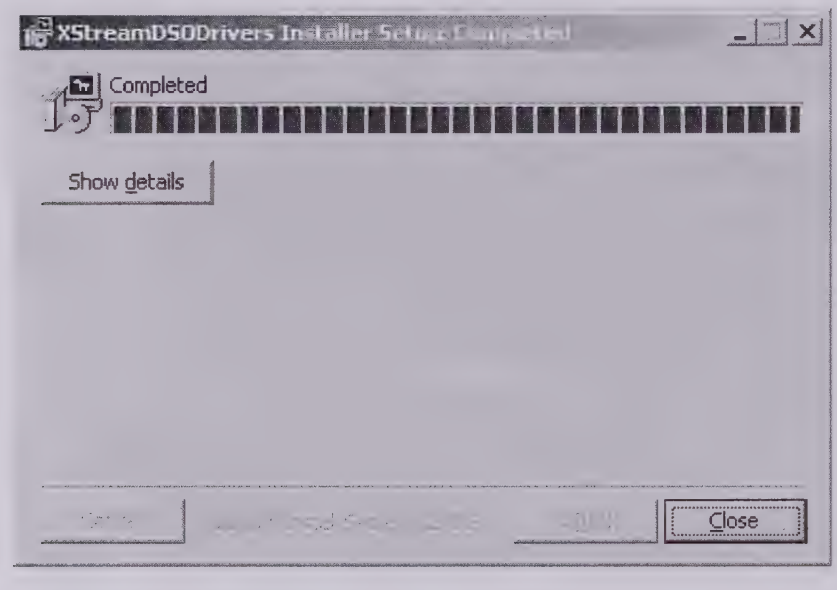

- After this is complete press close:

6.3.4 Upgrading Microcode

- Next the Hardware Programmer Dialog box will appear:

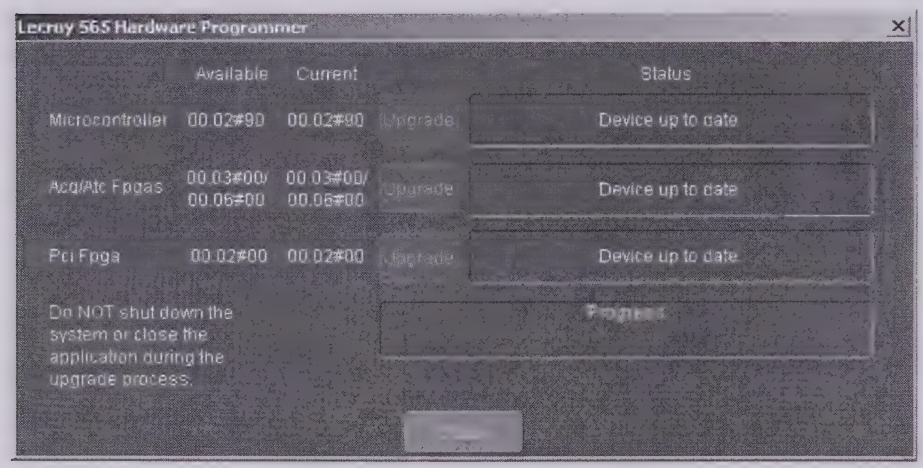

- If any update is required the update buttons will not be grayed out as shown above. Press one update button and wait for it to complete before pressing any other update buttons. **It is extremely important that this process not be interrupted while the parts are being programmed. Any interruption of power or interruption of the process may require that the instrument be returned to the factory for correction.**

- Once the update process is completed and no errors have been displayed, the power must then be cycled to invoke the new program settings. If no update was required then it is not necessary to cycle the power.
- The XStreamDSO application should automatically begin after power has been restored and after Windows has finished booting up. As the XstreamDSO application is launching the screen will appear as:

6.3.5 Verifying Microcode

If the version of the programmed hardware needs to be checked to see if it is at the correct revision for the software which is installed, the WavemasterHardwareProgrammer may be manually invoked by pressing Start, Programs, LeCroy, XStream, Service, hwprogrammer.exe. Follow the instructions list in section 6.3.3 above.

6.3.6 Restoring the Operating System

There may be circumstances where it is desired to completely wipe the C: partition of the hard drive and reinstall the operating system and Wavemaster software. Each WaveRunner is supplied with a System Recovery CD which will restore the original operating system configuration of the instrument. It will not disturb anything which is installed on to the D: drive. Any application software which had been

previously installed will need to be reinstalled. The following steps must be followed:

- Plug a keyboard into the instrument.
- Insert the System Recovery CD into the CDROM drive.
- Turn on power to the instrument, the system will boot from the CD (if it does not boot from the CD, the BIOS settings regarding boot order may have been changed, restart the computer while pressing F2 on the keyboard to get to the BIOS settings screen. Change the boot order to boot from the CD first).
- After booting the screen should display the X-Stream System Recovery CD screen.
- Select Continue , press enter
- An additional warning "All C drive data will be lost" appears – press enter for YES
- The software installation progress bars will appear, this loading process will take app. 5 minutes.
- Remove CD when prompted - press enter
- Wait for the operation to take place (10-15 minutes) and an A:\> prompt to appear. (If the message " cannot load the file a:\command.com insert correct disk and strike a key" appears, cycle power on the scope.
- Remove the CD ROM from the drive and cycle power.
- Insert the Wavemaster Installation CD ROM into the drive.
- When the system boots up, Windows 2000 setup will need to be completed before the XStreamDSO Software can be installed onto it Accept the license agreement and press Next.
- You will be prompted for the product key, this can be found on the Windows License label on the rear panel of the instrument.
- When prompted for Computername, type the serial number located on the rear panel (e.g. LCRY0601P63247).
- The unit will finish the setup process.
- At network setup press next.
- When LeCroyuser setup comes up, press next (with a blank password). Press finish.
- Close the add new hardware dialog box.
- Follow directions above for installing new XStreamDSO software.
- Once complete with the XStreamDSO software and driver installation, launch the DSO application.
- Perform the touch screen calibration procedure in step 6.6.2.
- Installation is complete.

6.3.7 Software Options

There are many software options available, new ones are being developed all of the time, refer to the LeCroy website for the latest selection of options available.

6.3.7.1 Changing Software Option Key

a. Scope ID, Scope Serial Number

The scope ID and scope s/n: are used to request a Software Option Key

- Enter the scope's Software Options menu (located under Utilities, Options)

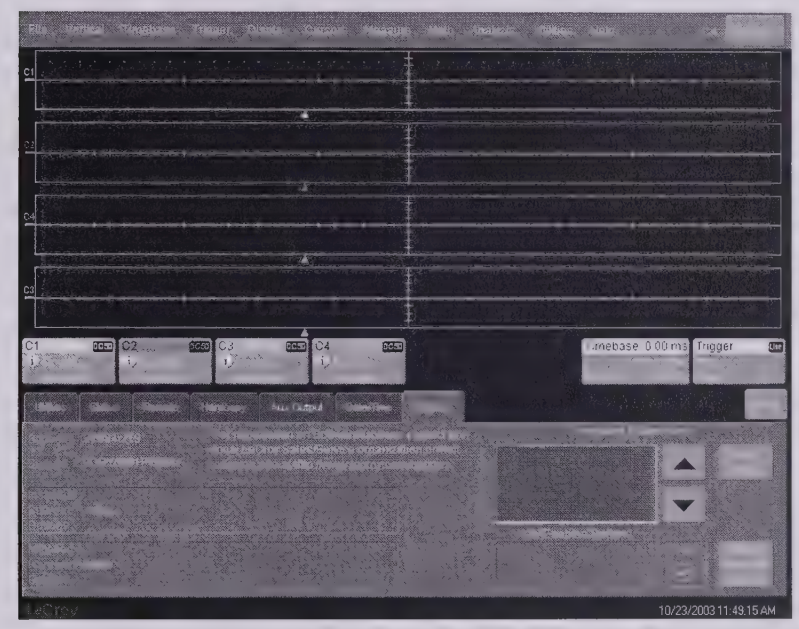

.Note the **SCOPE ID**, i.e.: 12c5c6-a4 and **Scope s/n**: LCRY0601P10241 that are found on that menu.

b. Entering Option Key in the DSO

- Enter the scope's Software Options menu (**Utilities, Options** menu).
- Press the **ADD KEY** button on the DSO touch screen
- Enter the new option key, i.e.: **5F4F-3184-2C81-8EF*8**
- Press **O.K.** to add the key
- Verify that the correct options are enabled (e.g. DDM2, JTA2, XMAP).

6.4 Board Exchange Procedure

6.4.1 Processor Board Exchange Procedure

The WaveRunner 6000 system may be built with different processor configurations as the WaveRunner 6000 series uses an Intel motherboard. Currently the units are built with 1.8Ghz Celerons. Different hard disk images must be loaded based on the type of processor board installed. Only use the System Recovery CD which was delivered with your WaveRunner 6000.

6.4.2 Hard Drive Replacement Procedure

The Hard Drive contains important calibration files which must be restored if the hard drive is to be completely erased or replaced. (see section 6.6 for instructions) Please note: if the hard drive is restored using the System Recovery CD which is supplied with the WaveRunner these files will not be damaged or removed.

6.5 Equipment and Spare Parts Recommended for Service

6.5.1 Test Equipment Required

See Table 5-1 in section 5.2.

6.5.2 WaveRunner Spare Parts

LeCroy P/N	Assembly	Adjustments	Performance Tests
258000007	TFT DC-AC Inverter	None	None
901461-00	Rear Fan Assy	None	None
900893-00	Power Supply Assy	6.7.1	None
901740-00	2 ch Front Panel Keyboard Assy	None	None
900896-00	4 ch Front Panel Keyboard Assy	None	None
258000008	Display and Touchscreen	6.7.2	None
901549-00	AGP/DVO Interface	None	None
900890-00	PCI Interface	None	None
334600003	PC Motherboard	None	None
227500020	2.0 GHz Celeron Processor	None	None
330000005	Hard Disk Drive	None	None
330000033	CD R Drive	None	None
335830015	CD R/W Drive	None	None
901851-00	USB Hub	None	None
900888-00	2 GHz 5GS/s 4 Ch Acq. Board	Factory	Chapter 5
901765-00	1 GHz 5GS/s 4 Ch Acq. Board	Factory	Chapter 5
901764-00	500 MHz 5GS/s 4 Ch Acq. Board	Factory	Chapter 5
901763-00	500 MHz 5GS/s 2 Ch Acq. Board	Factory	Chapter 5
901806-00	350 MHz 5GS/s 4 Ch Acq. Board	Factory	Chapter 5

See chapter 7, 8 & 9 for mechanical and electrical replaceable parts.

6.6 Service Menu

6.6.1 Accessing Service Menu

The service menu is accessed by pressing Utilities, Utilities Setup.

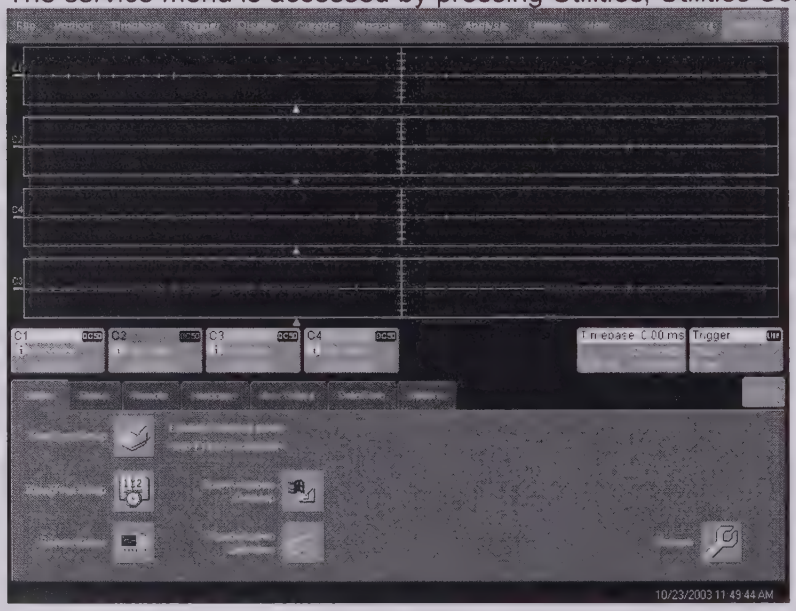

Press the service button in the lower right corner, you will be prompted with a password dialog box. Enter password 9472. You will be granted service center access.

6.6.2 Mainframe Tests

6.6.2.1 Front Panel Test

From the service menu select Front Panel and select Production Test. Select On. A picture of the front panel will appear on the screen as shown below:

Press each button in turn and turn each knob in both directions, they will change color as shown below:

Continue until all buttons and knobs have been tested and the front panel turns green indicating completion.

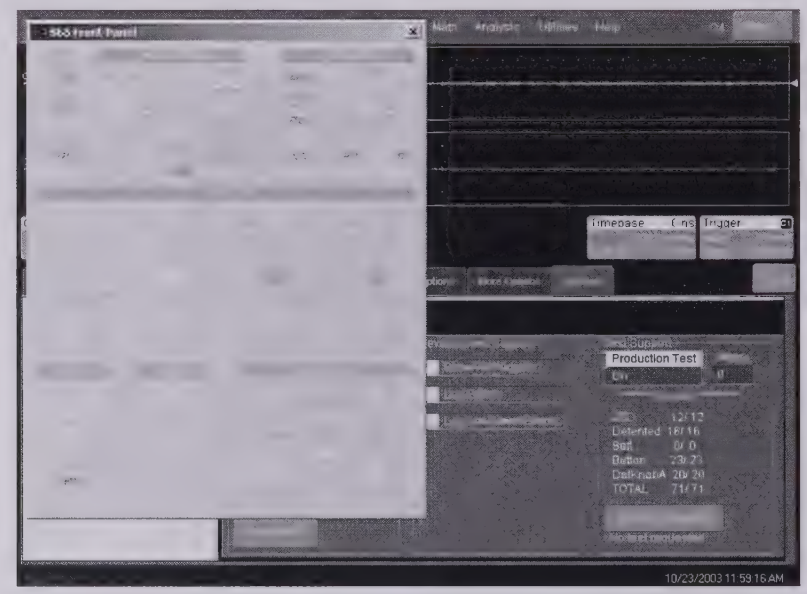

Select Production test and then off to turn off the test. The front panel LED's will be left in an abnormal state. This will be corrected when either the functions are used or when the application is restarted.

6.6.2.2 Critical File Backup

The hard disk contains critical factory calibration constants which must be backed up and restored if the hard drive is to be replaced or erased. These files will fit on a single floppy disk drive or USB storage device. From the service menu select Critical Files Backup, you will be prompted with a screen as shown below.

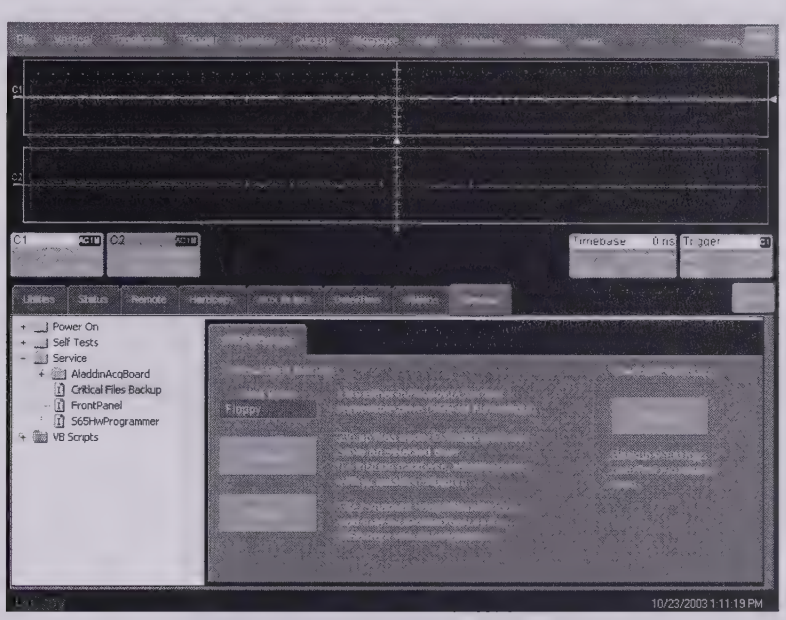

Select the device to back up to and press the backup button. The system will create a zip file named serialnumber.zip wherial serial number is of the form LCRY0602P12345) and copy it to the selected device.

6.6.2.3 Critical File Restore

After the hard drive has been replaced, the critical calibration files must be restored. Using the utility described above, select the storage device where the critical files exist and press restore. Note: the files can only be restored onto the same serial number unit that the files came from.

6.6.3 Acquisition System Tests

6.6.3.1 Critical Acquisition System Component Temperatures

In the service menu under AladdinAcqBoard there is a screen as shown below where the temperatures of the critical components on the main card can be monitored. The MFE and MFEEXT is the front end amplifier, the MAD is the ADC hybrid and the MAM is the acquisition memory. (the MAM listed under channel 1 are for channel 1 & 2, the ones under channel 2 are actually for channel 3 & 4) .The MTB is on the time base and trigger chip. The Ambient is not measured. The MFE and MTB have traditional heatsinks mounted to them, the MAD & MAM's have a fan cooled heatsink mounted to them. A temperature above 100°C is a cause for concern and should be corrected. Verify that the air inlet holes or exhaust holes are not covered and that the fans are operating correctly.

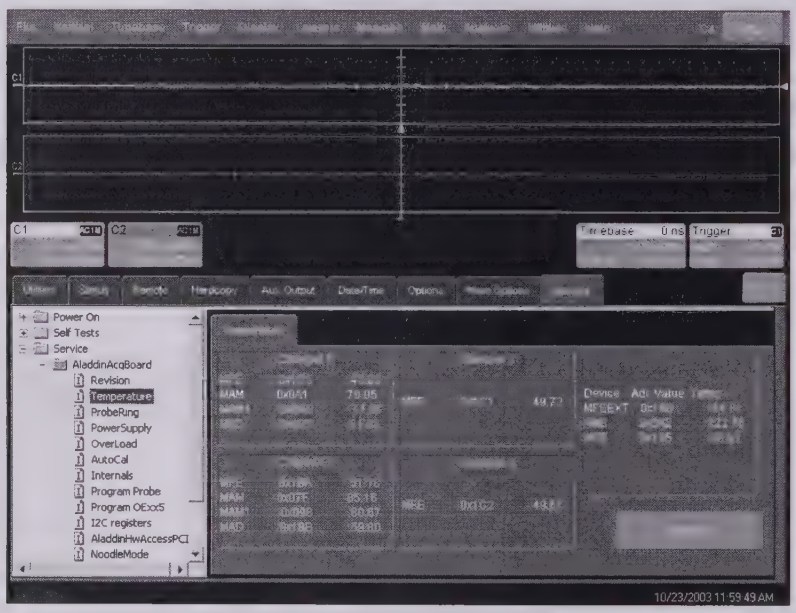

6.6.3.2 Automatic Calibrations

There is a screen entitled AutoCal in the service menu which will allow you do disable the calibrations performed by the software. There may be instances where the unit is stuck in a continuous calibration loop and until the calibrations are disabled, it can be very difficult to troubleshoot. Disabling the calibrations will allow you to inject signals and view traces. Refer to the troubleshooting trees for further information on using the function of this screen.

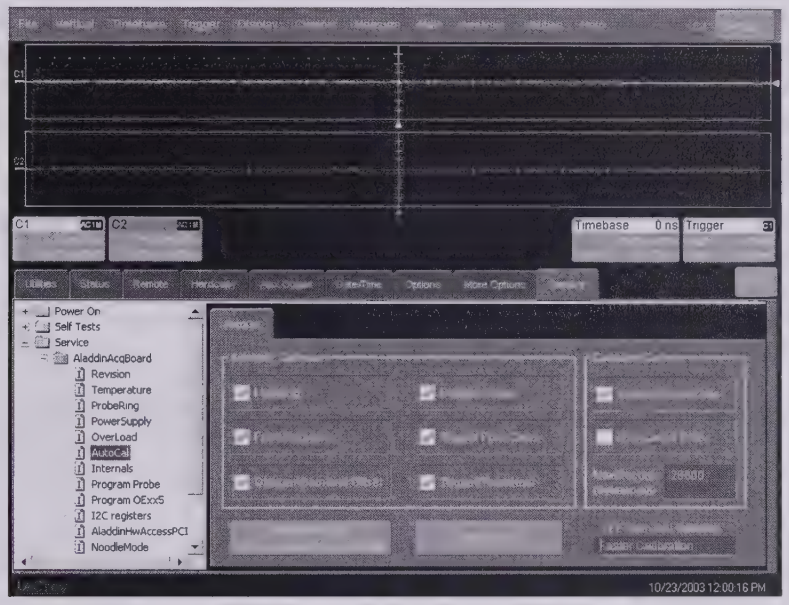

6.7 Calibration Procedures

The following section includes the manual and software assisted adjustments that can be made in the Wavemaster system

6.7.1 System Power Supply Calibration Procedure

- Measure the power supply voltages as shown in the table below. If any are found to be outside of their specifications proceed with the remainder of this procedure to adjust them.
- The power supply will need to be removed from the unit and have the cables connected to the main acquisition card for a load.
- +5V should be present on pin 1 of J6. This +5V must be connected to J6 pin 4 to enable the supply outputs. Once connected, the outputs should all reach their approximate intended output voltage.
- Measure each voltage as shown in the table below and adjust the potentiometers accessible through the cover as shown until each voltage is within its specified range.

The following table lists the nominal, min and max voltages for the outputs from the main power supply.

Nominal Output Voltage (Vset)
+3.3V ±2%
+5.05V ±3%
-3.3V ±2%
+12V ±2%
-12V ±2%
-5.05V ±3%
+24V ±2%
+5VSB ±3%

Measurement Locations:

CPU Brd Main Power Connector (J1)

Pin #	Signal	Wire Color	Pin #	Signal	Wire Color
1	+3.3VDC	Orange	11	+3.3VDC	Orange
2	+3.3VDC	Orange	12	-12VDC	Blue
3	COM	Black	13	COM	Black
4	+5VDC	Red	14	OUTPUT_EN/	Green
5	COM	Black	15	COM	Black
6	+5VDC	Red	16	COM	Black
7	COM	Black	17	COM	Black
8	PWR_OK	Gray	18	NC	
9	+5VSB	Purple	19	+5VDC	Red
10	+12VDC	Yellow	20	+5VDC	Red

CPU Brd +12 V Power Connector (J2)

Pin #	Signal	Wire Color	Pin #	Signal	Wire Color
1	COM	Black	3	+12VDC	Yellow
2	COM	Black	4	+12VDC	Yellow

Top Box Peripheral Connector (J3)

Pin #	Signal	Wire Color	Pin #	Signal	Wire Color
1	+3.3VDC	Orange	8	COM	Black
2	+3.3VDC	Orange	9	COM	Black
3	+3.3VDC	Orange	10	COM	Black
4	+5VDC	Red	11	COM	Black
5	+5VDC	Red	12	COM	Black
6	+5VDC	Red	13	COM	Black
7	+12VDC	Yellow	14	COM	Black

Acquisition Board Connector (J4)

Pin #	Signal	Wire Color	Pin #	Signal	Wire Color
1	-3.3VDC	White	9	COM	Black
2	-3.3VDC	White	10	COM	Black
3	-3.3VDC	White	11	COM	Black
4	-3.3VDC	White	12	COM	Black
5	-3.3VDC	White	13	COM	Black
6	-3.3VDC	White	14	COM	Black
7	-3.3VDC	White	15	COM	Black
8	-3.3VDC	White	16	-3.3VRS-	Brown

Acquisition Board Connector (J5)

Pin #	Signal	Wire Color	Pin #	Signal	Wire Color
1	+3.3VDC	Orange	12	COM	Black
2	+3.3VDC	Orange	13	COM	Black
3	+3.3VDC	Orange	14	COM	Black
4	+3.3VDC	Orange	15	COM	Black
5	+3.3VDC	Orange	16	COM	Black
6	+3.3VDC	Orange	17	COM	Black
7	+3.3VDC	Orange	18	COM	Black
8	+3.3VDC	Orange	19	COM	Black
9	+3.3VDC	Orange	20	COM	Black
10	+3.3VDC	Orange	21	LFS	Purple/White
11	+3.3VRS+	Brown	22	RS Common	Black/Red

Acquisition Board Connector (J6)

Pin #	Signal	Wire Color	Pin #	Signal	Wire Color
1	+12VDC	Yellow	10	COM	Black
2	+12VDC	Yellow	11	COM	Black
3	+12VDC	Yellow	12	COM	Black
4	-12VDC	Blue	13	COM	Black
5	-12VDC	Blue	14	COM	Black
6	-5VDC	Blue/White	15	COM	Black
7	-5VDC	Blue/White	16	COM	Black
8	+5VDC	Red	17	COM	Black
9	+5VDC	Red	18	+5VDC	Red

Hard-Drive Connector (J7)

Pin #	Signal	Wire Color
1	+12VDC	Yellow
2	COM	Black
3	COM	Black
4	+5VDC	Red

CD-ROM Connector (J8)

Pin #	Signal	Wire Color
1	+5VDC	Red
2	COM	Black
3	Not	Used
4	Not	Used

Printer Connector (J9)

Pin #	Signal	Wire Color
1	+24VDC	White/Black
2	+24VDC	White/Black
3	+5VDC	Red
4	COM	Black
5	COM	Black
6	COM	Black

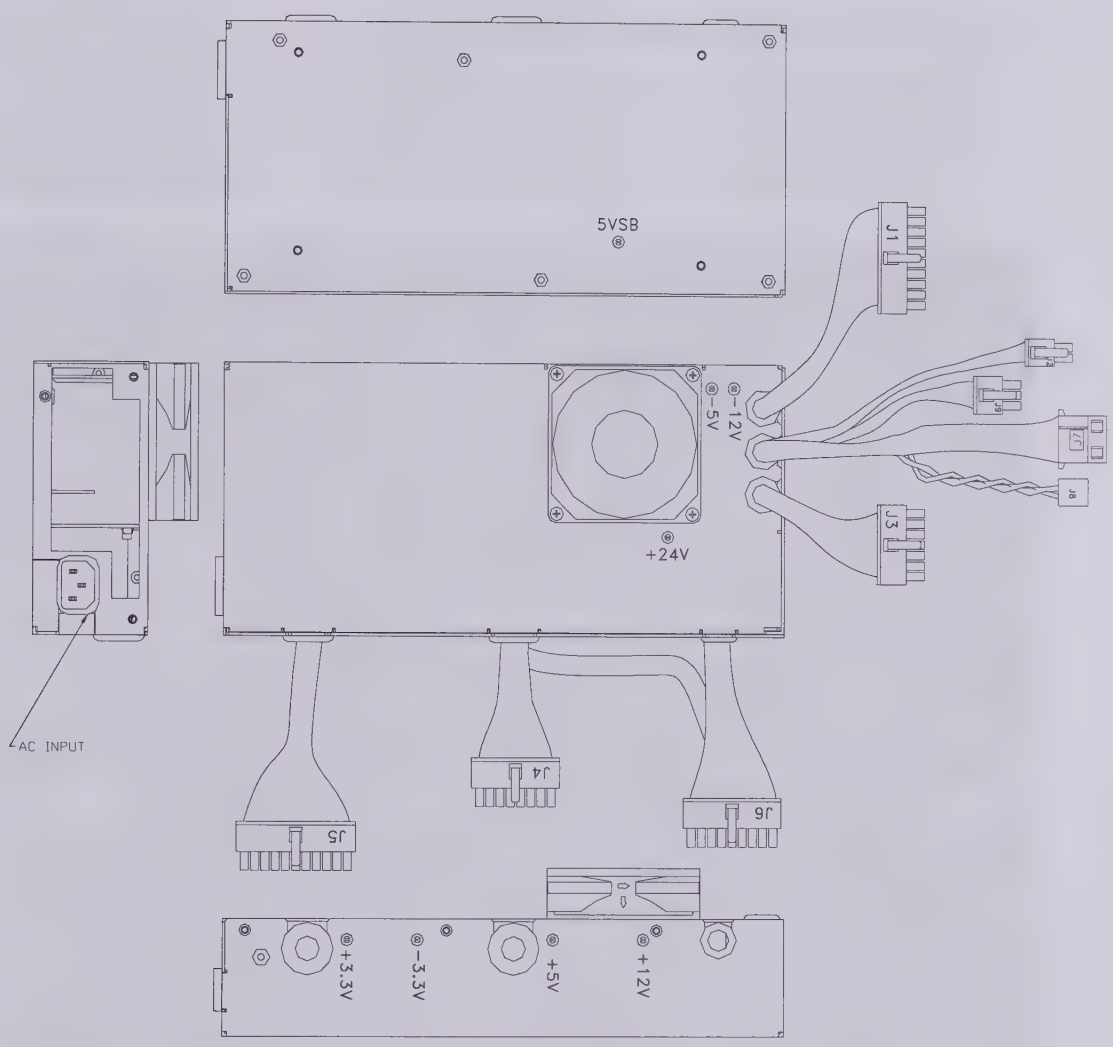

Figure 6-3: View of the power supply adjustment locations

6.7.2 Touch Screen Calibration Procedure

The touch screen must be calibrated based on the users vantage point to the screen, the size of their finger and their visual alignment with the tip of their finger to the screen. The calibration procedure can be invoked through the Utilities menu, Utilities tab. Press the touch screen button called “Touch Screen Calibration”.

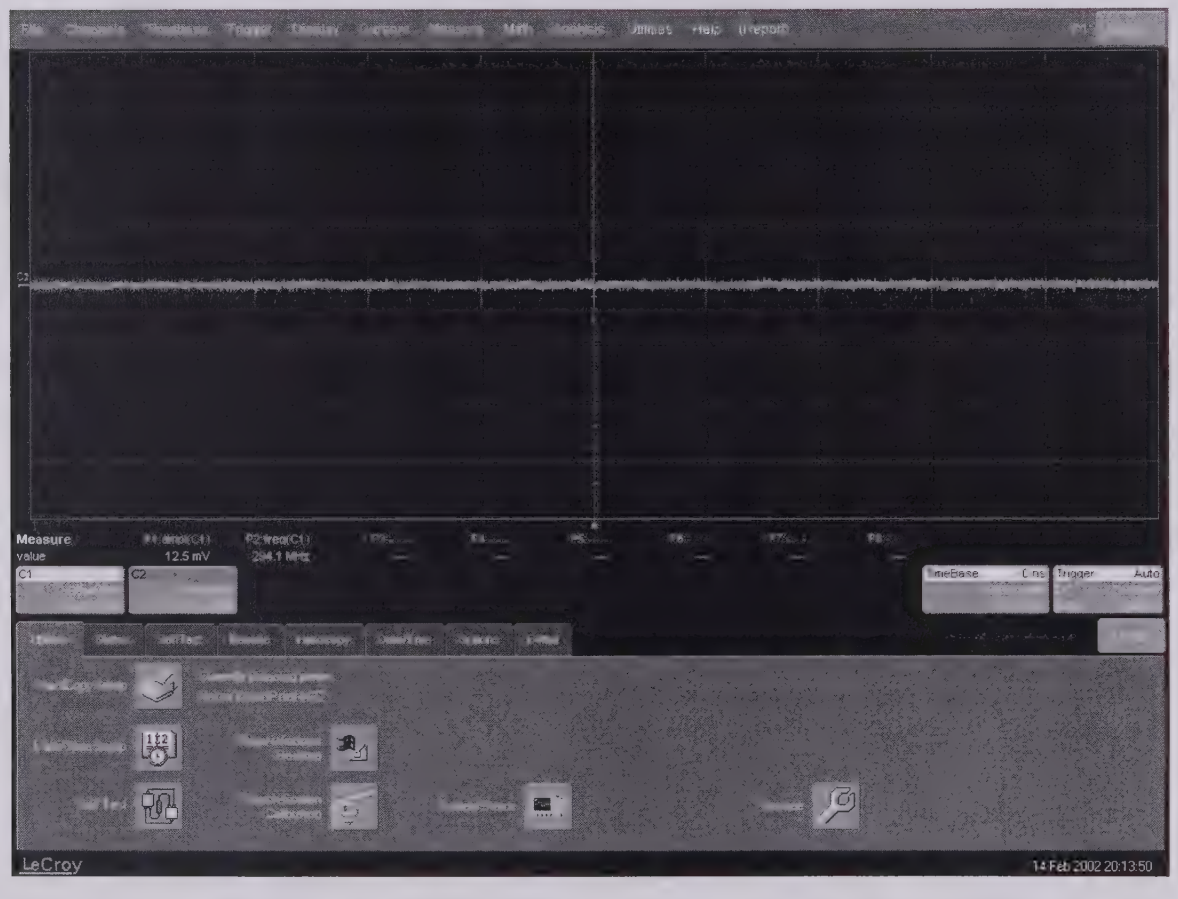

Figure 6-4 Touch Screen Calibration Menu

The user will be prompted with 5 locations on the screen for them to touch. They will appear one at a time and after touching each one, a new spot will appear. After all five spots have been touched, the touch screen is calibrated. It is important that you have the same vantage point to the screen that you will when the scope is in operation to have the easiest use of the touch screen.

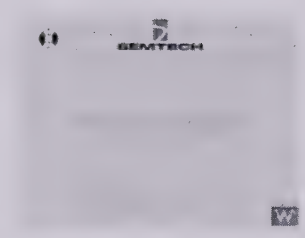

Point 1

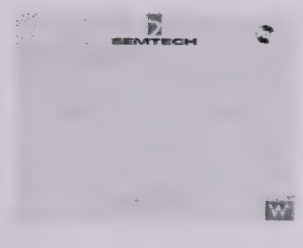

Point 2

Point 3

Point 4

Point 5

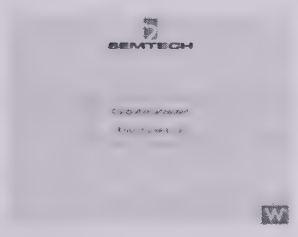

After the last point is pressed, a screen will be displayed indicating the error determined between the alignment of all the calibration points. If this error is too large, the calibration will be voided and the calibration sequence must be repeated. If the error is small then the calibration constants are applied.

6.8 Troubleshooting and Flow Charts

6.8.1 Introduction

The troubleshooting information contained in this section is intended for use by qualified personnel having a basic understanding of electronics (analog and digital). In order to simplify servicing and minimize downtime, the following list of possible symptoms, likely causes, and troubleshooting steps have been prepared. The first step in troubleshooting is to check for obvious items like blown fuses. The power supply is the next item to check before proceeding to more detailed troubleshooting, since noise or low power supply voltages can cause a variety of digital and analog problems.

6.8.2 Repair Level

Most procedures in this section will allow troubleshooting down to the **BOARD LEVEL.**

Defective circuit boards will be repaired or exchanged by the regional LeCroy service office or the local representative (see section 2.2).

6.8.3 Initial Troubleshooting

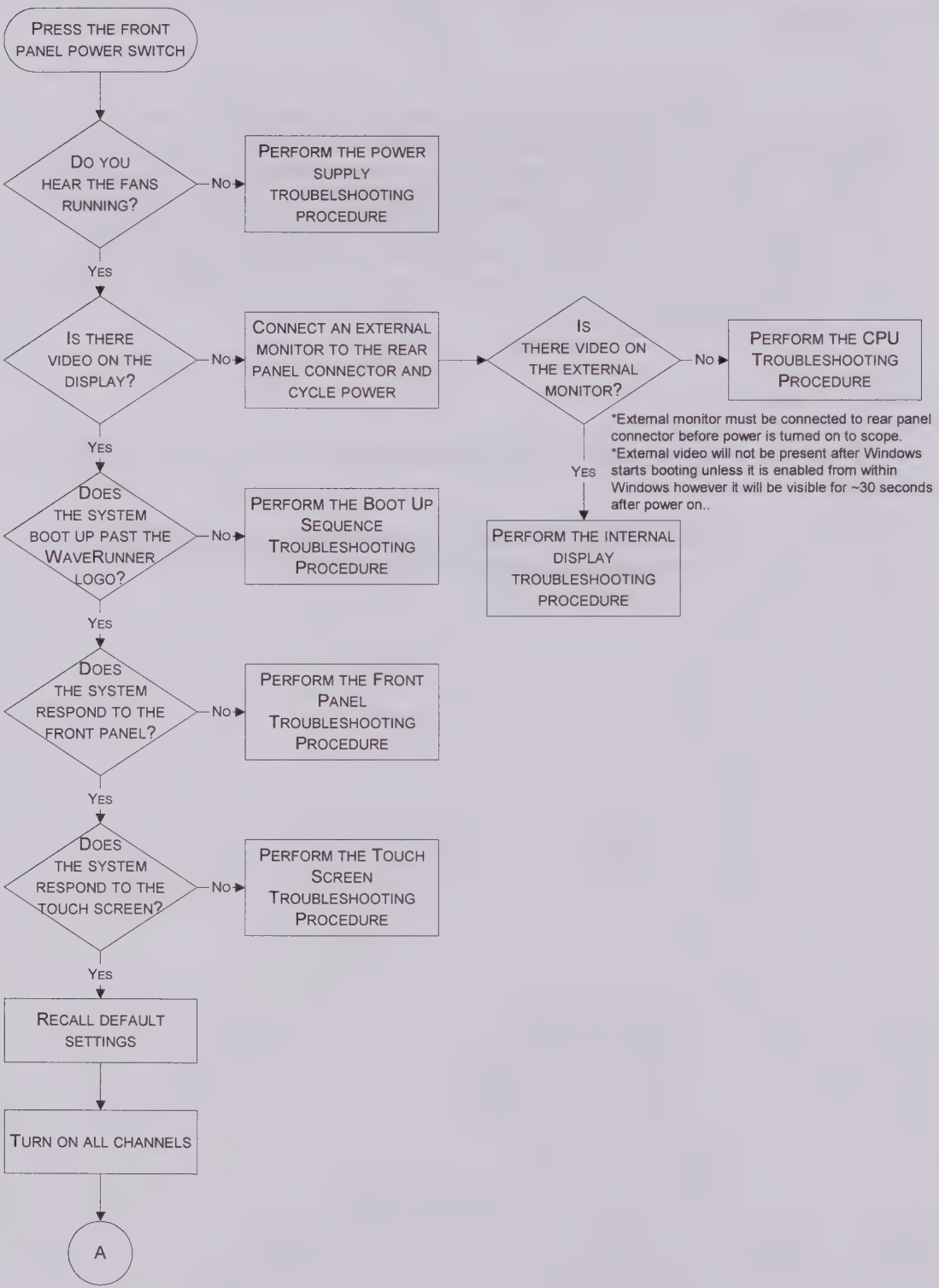

Initial Troubleshooting (continued)

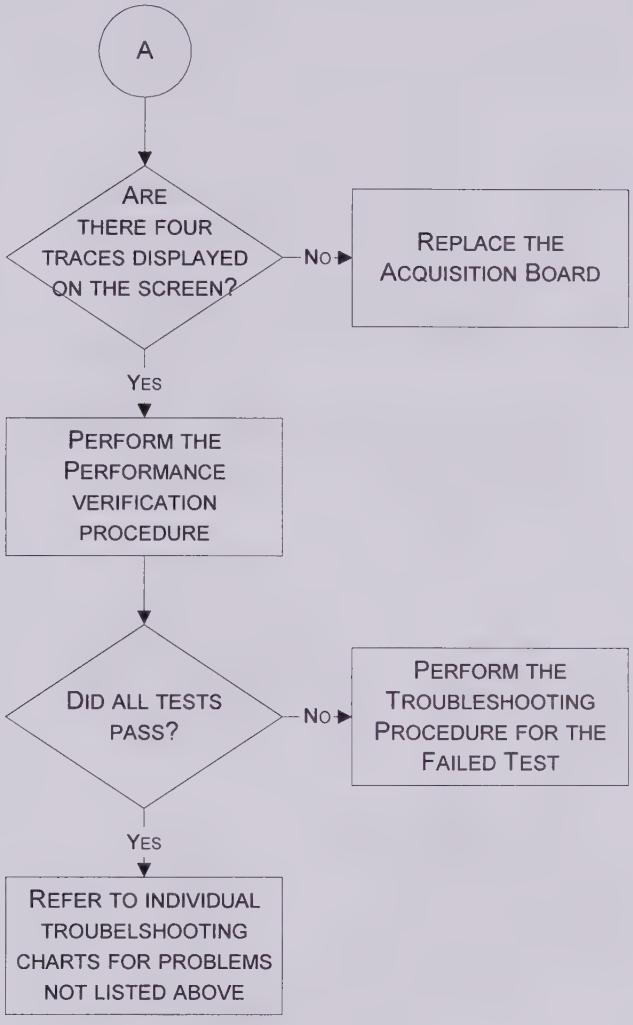

6.8.4 Power Supply Problem

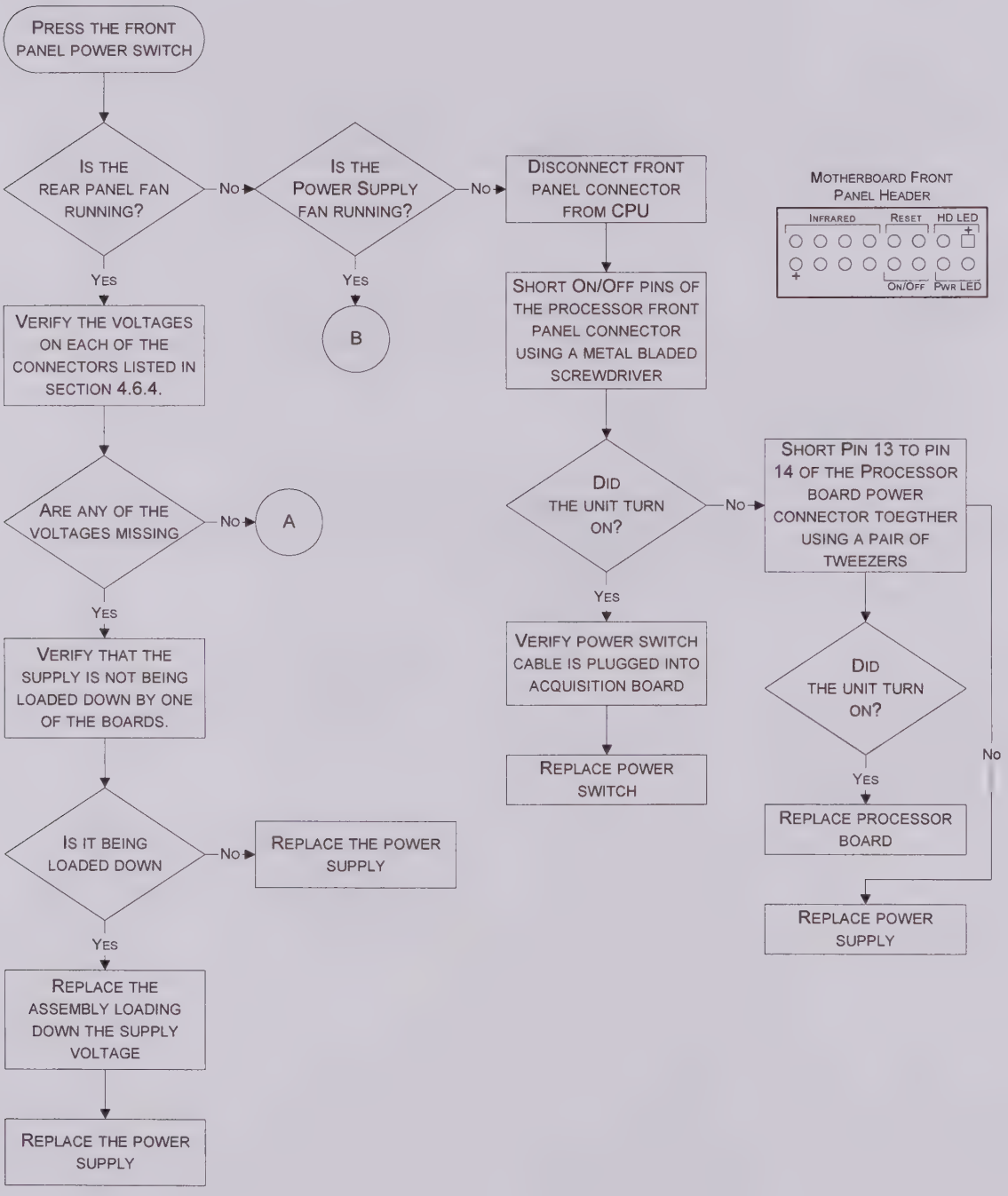

Power Supply Problem (continued)

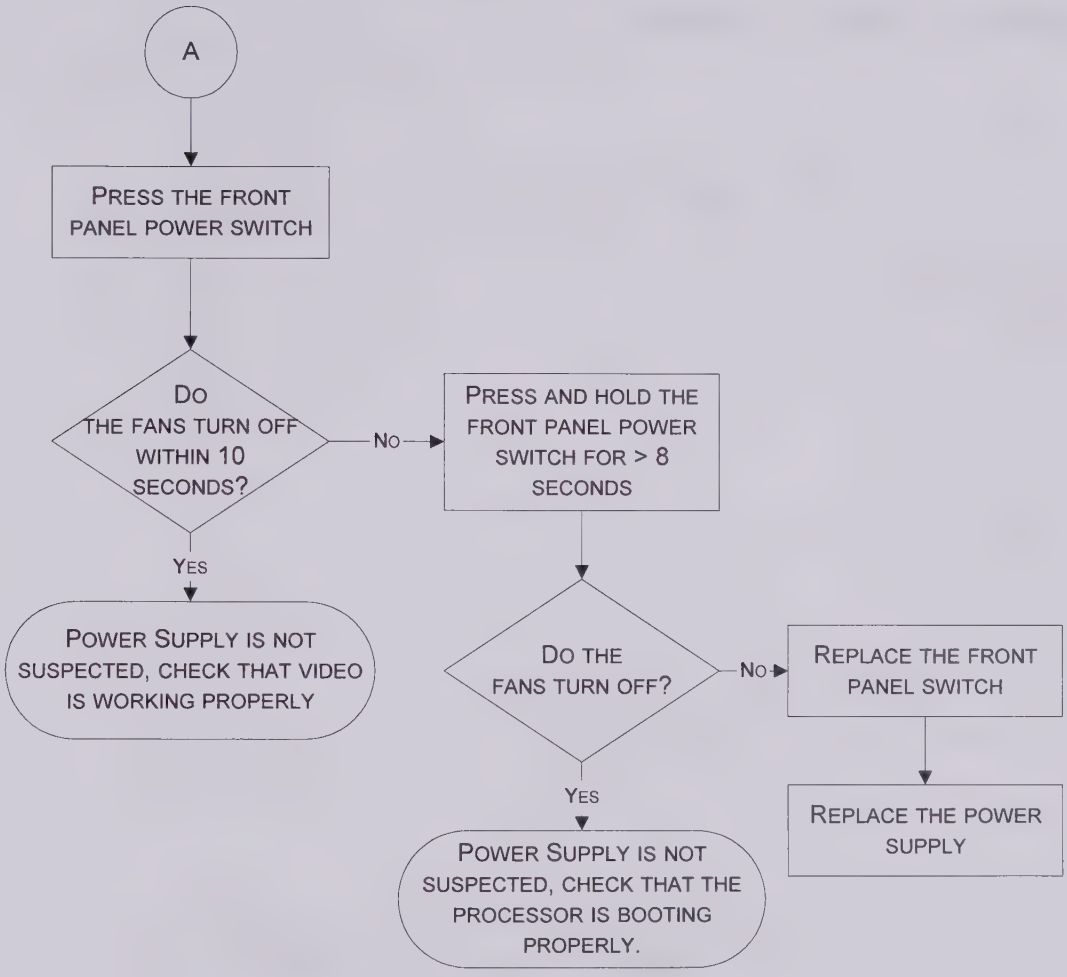

Power Supply Problem (continued)

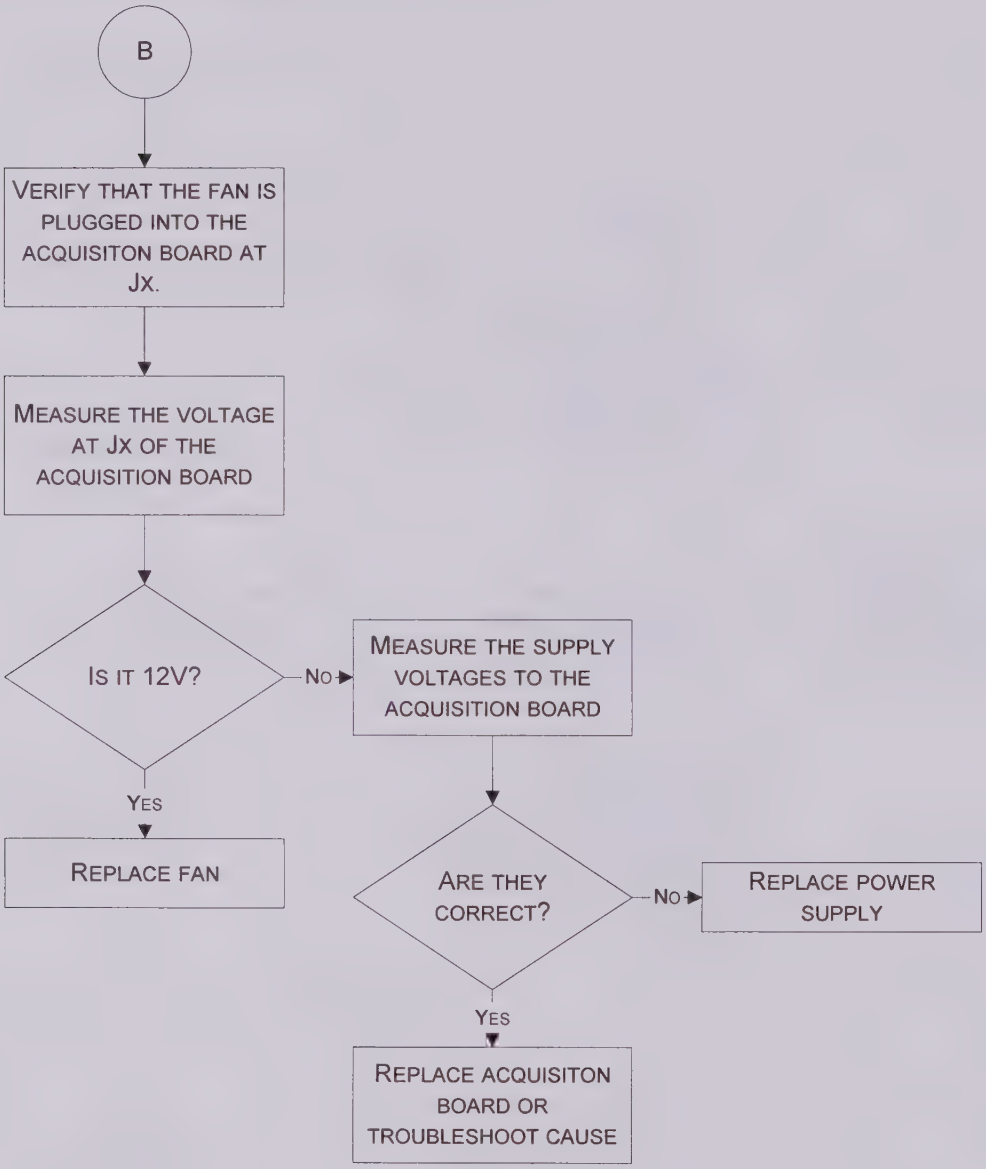

6.8.5 No Display (Internal or External)

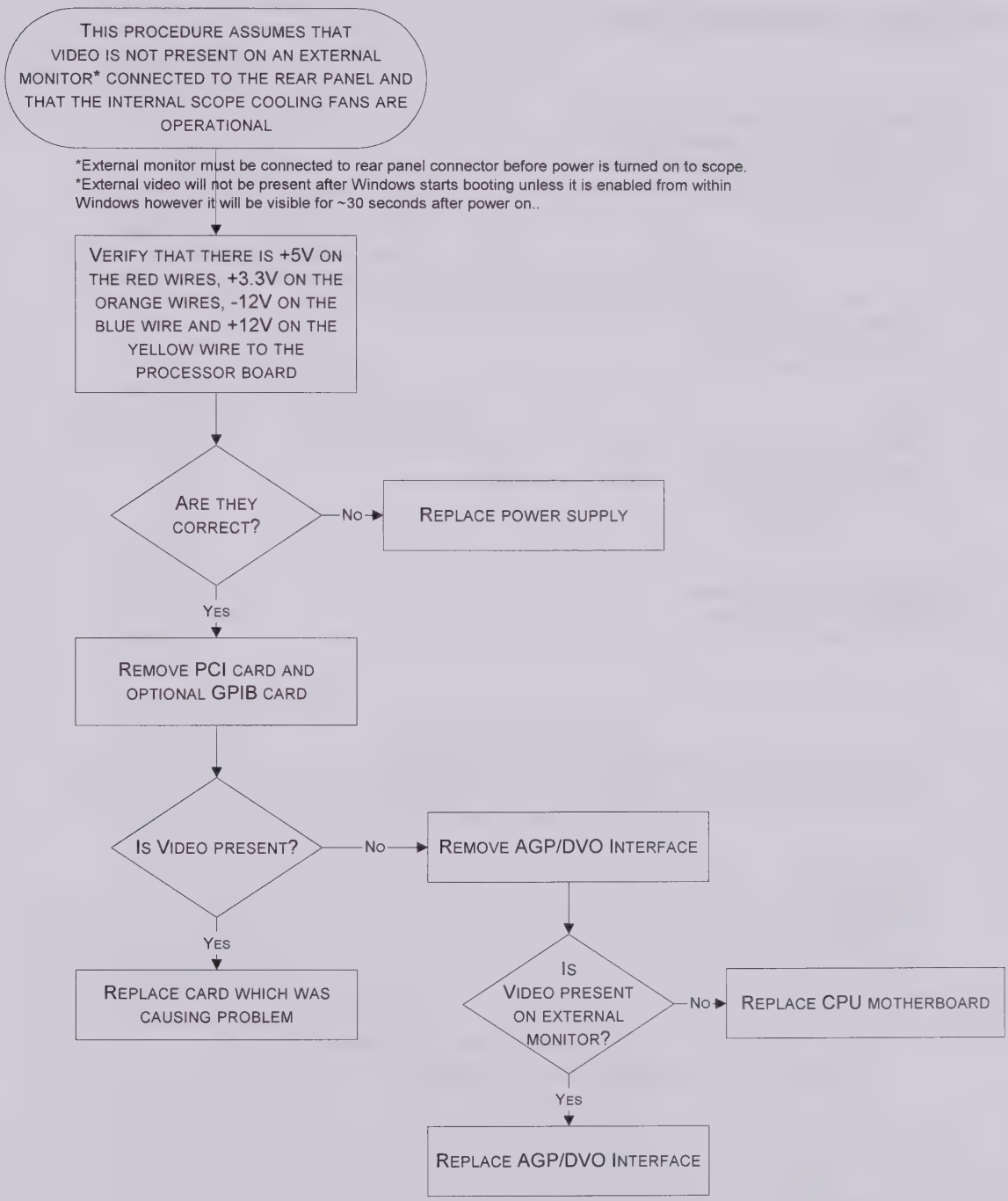

6.8.6 Internal Display Problem

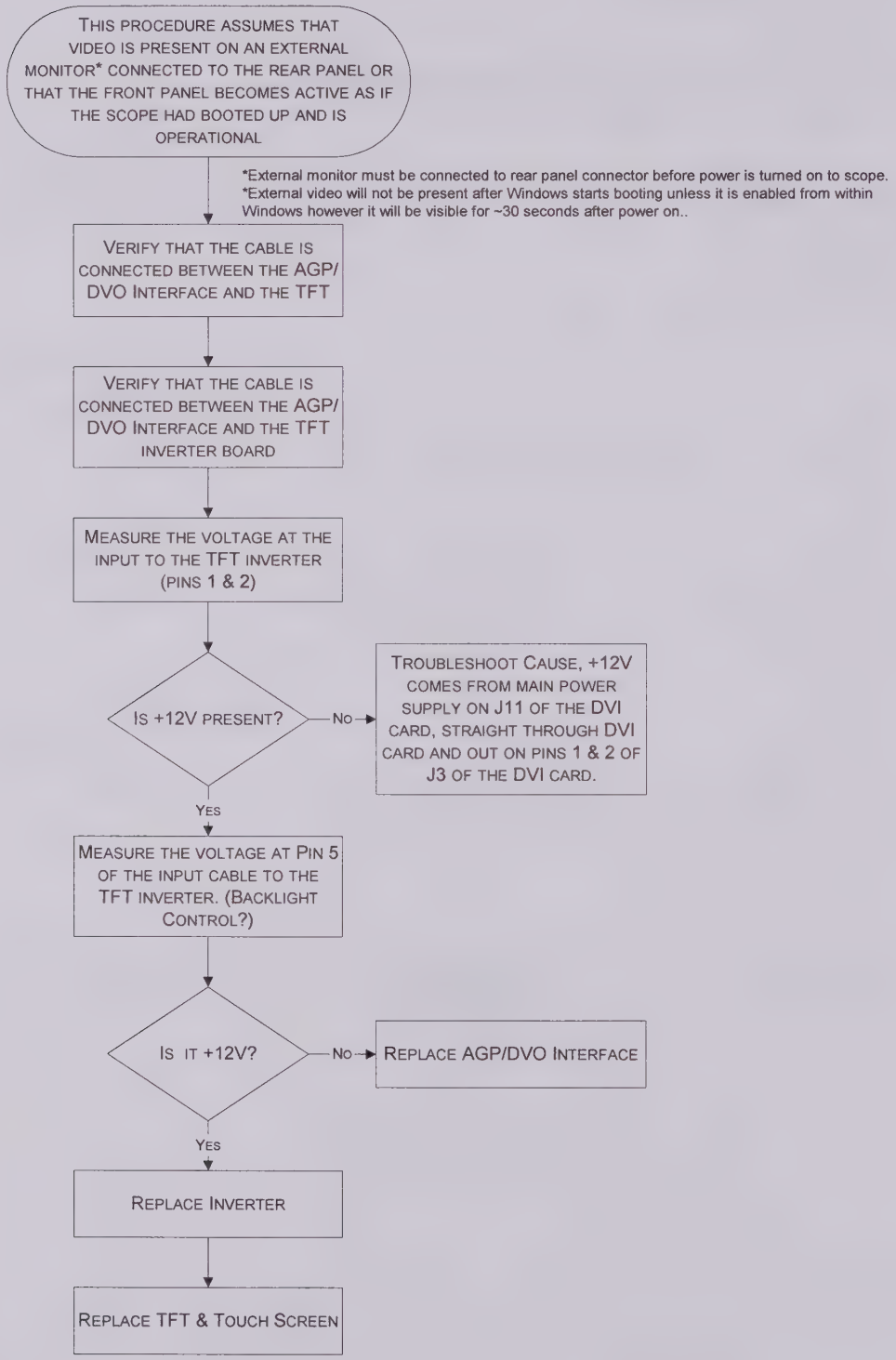

6.8.7 Boot Up Sequence

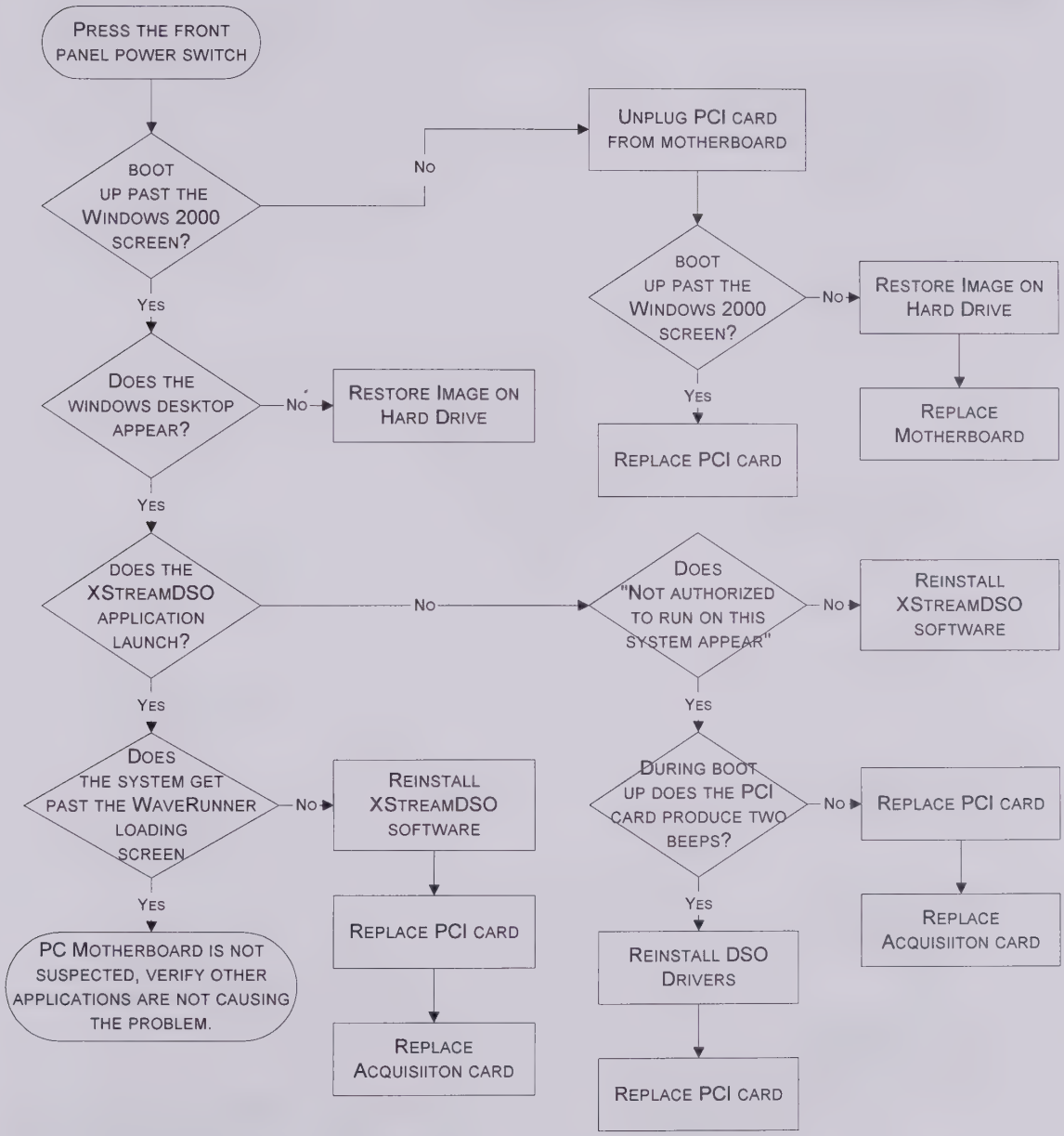

6.8.8 Front Panel Controls Do not Operate

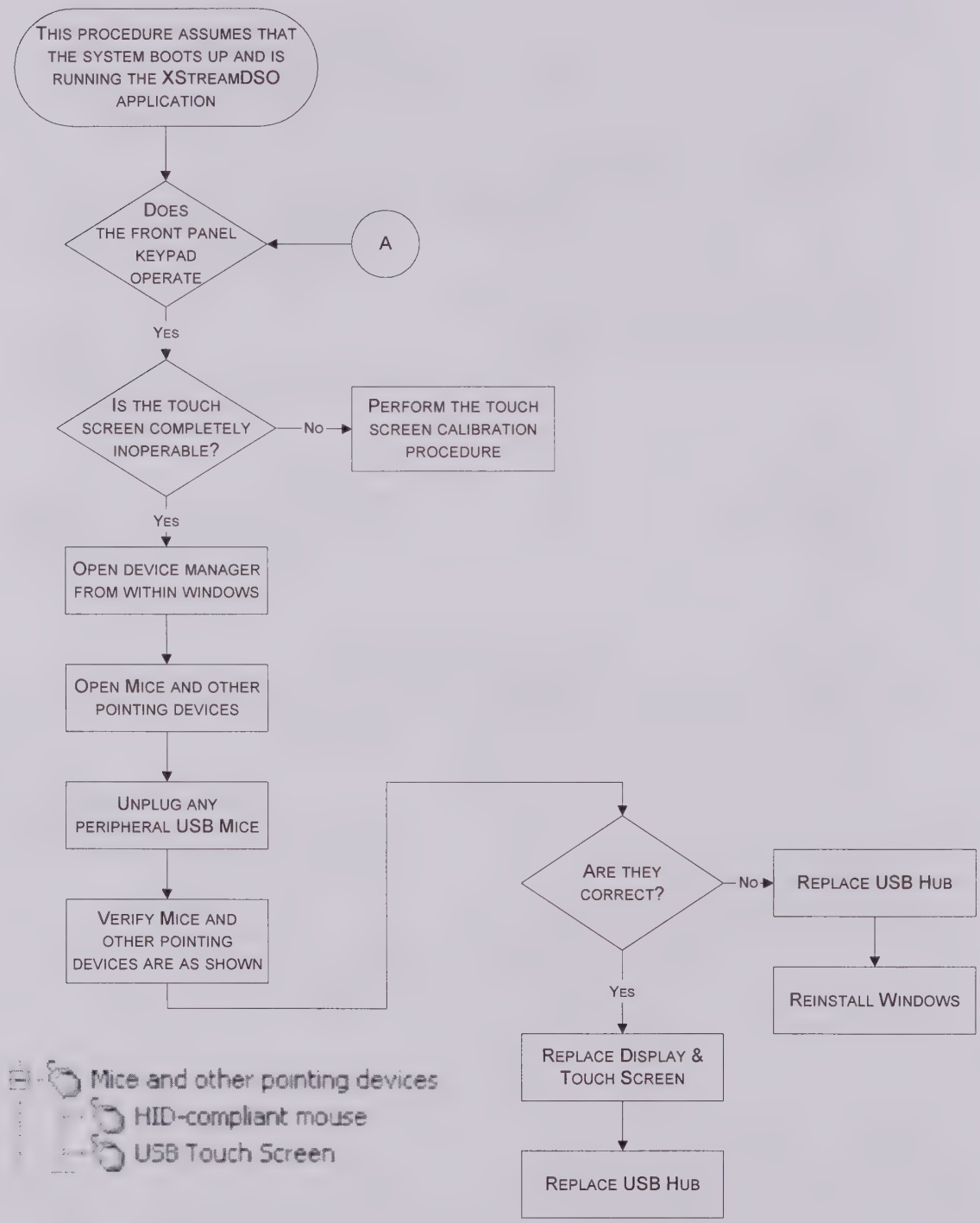

6.8.9 Touch Screen Problems

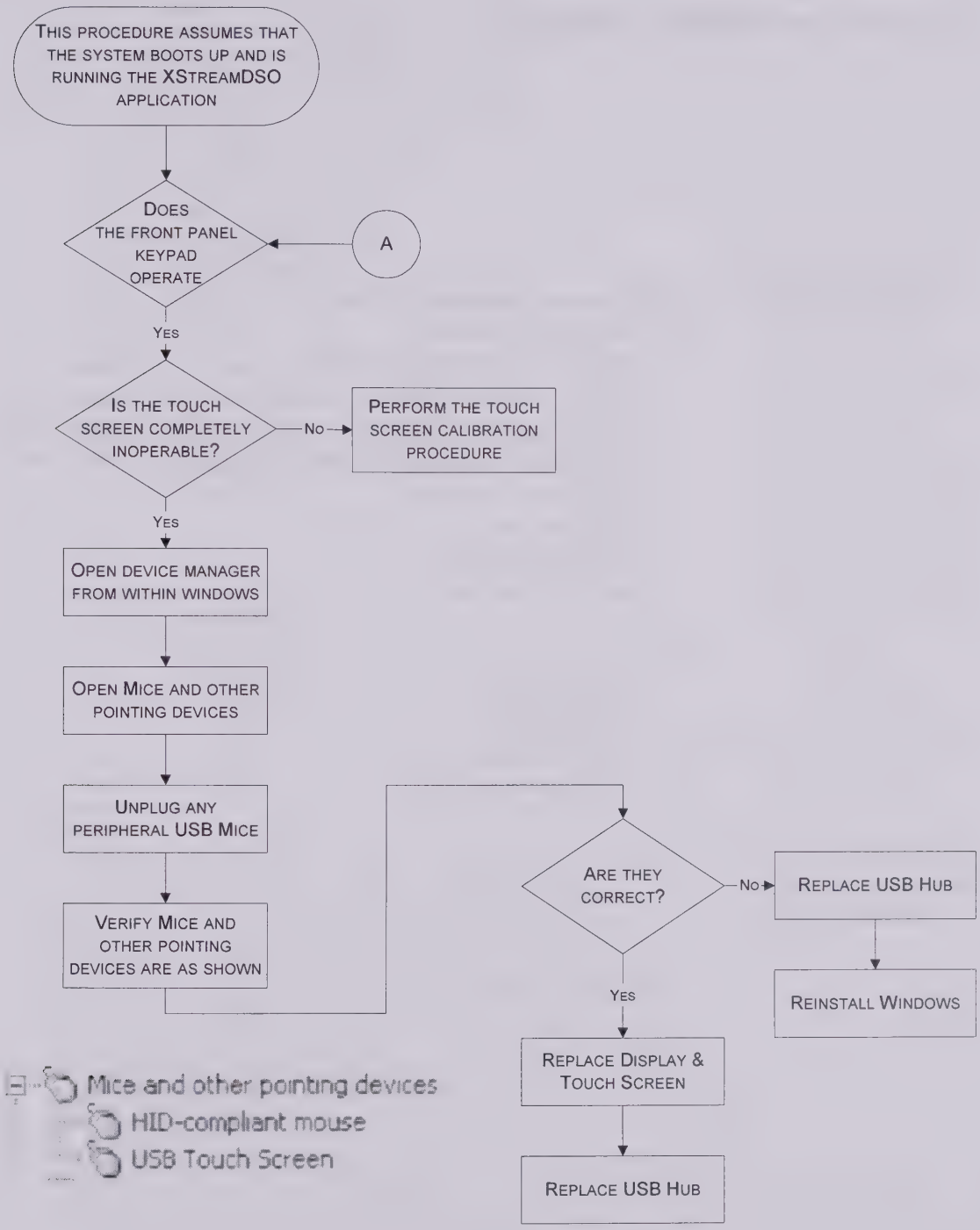

Touch Screen Problems (continued)

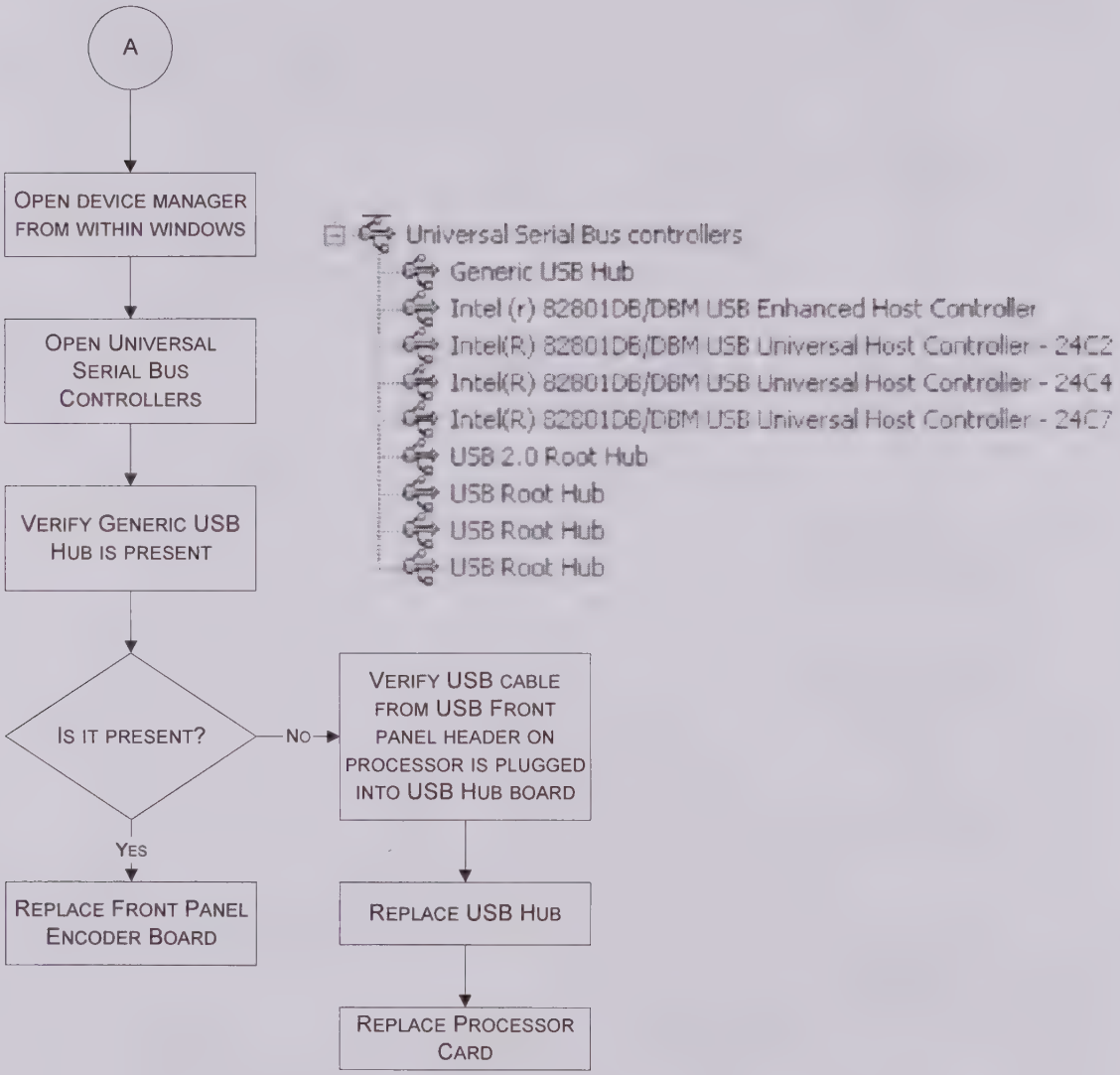

6.8.10 Timebase Problem

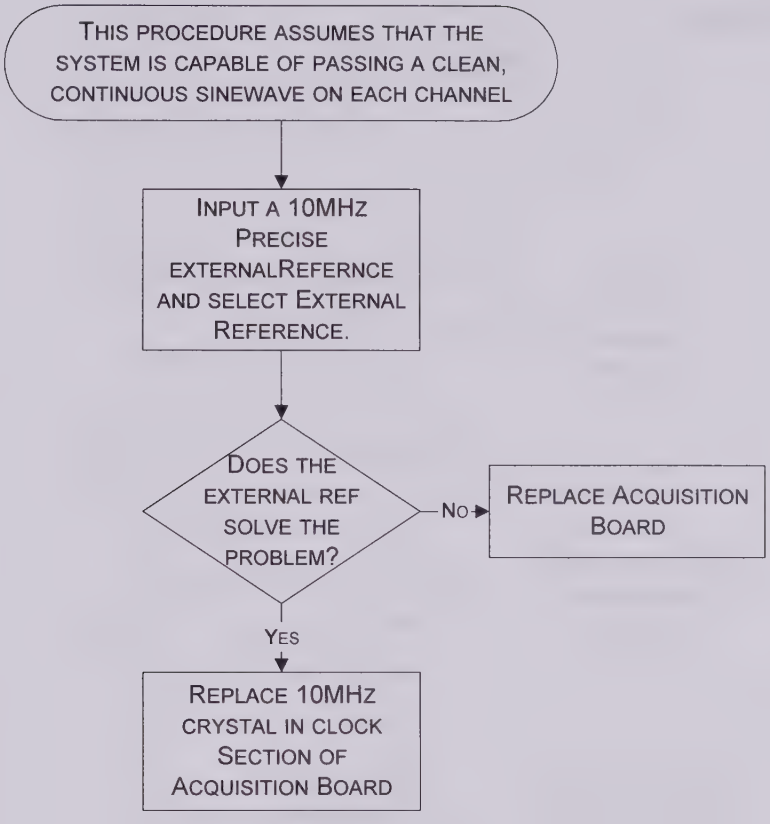

6.8.11 Remote Control Problem

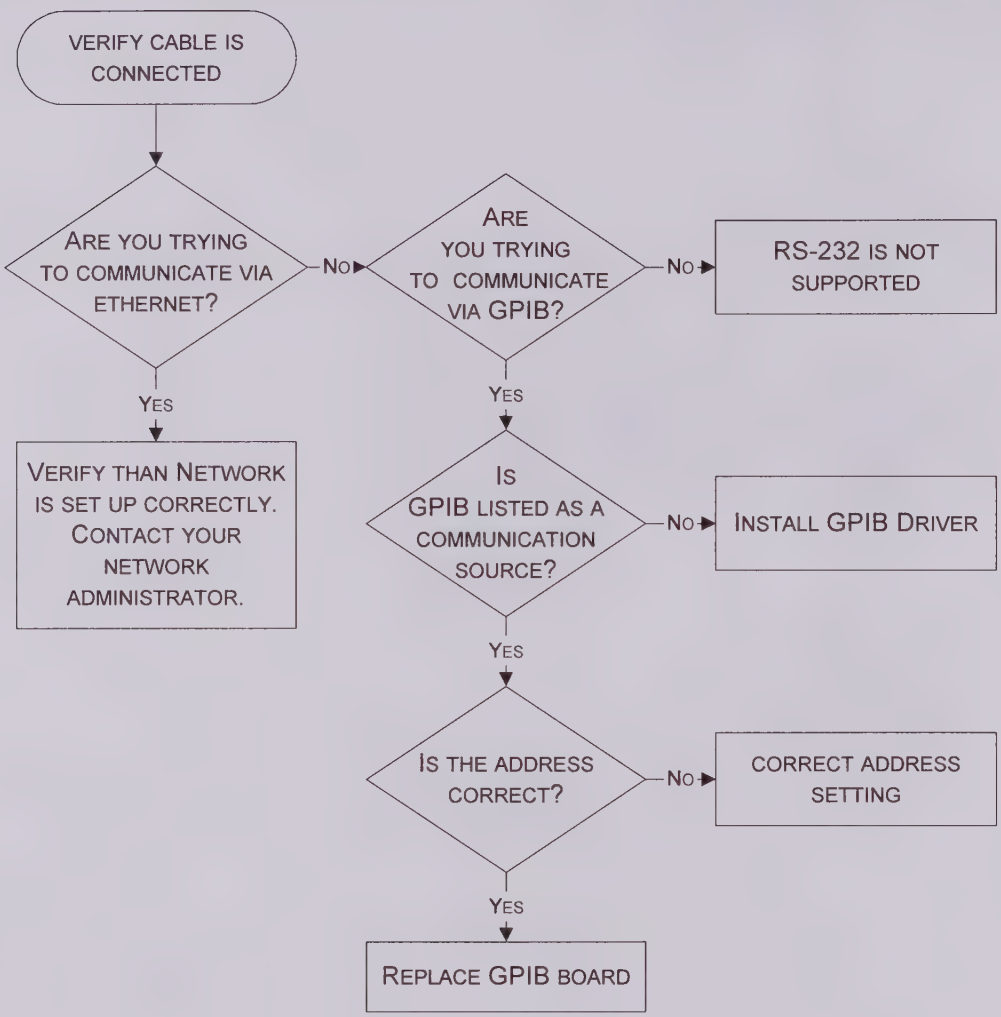

6.8.12 CD-ROM Problem

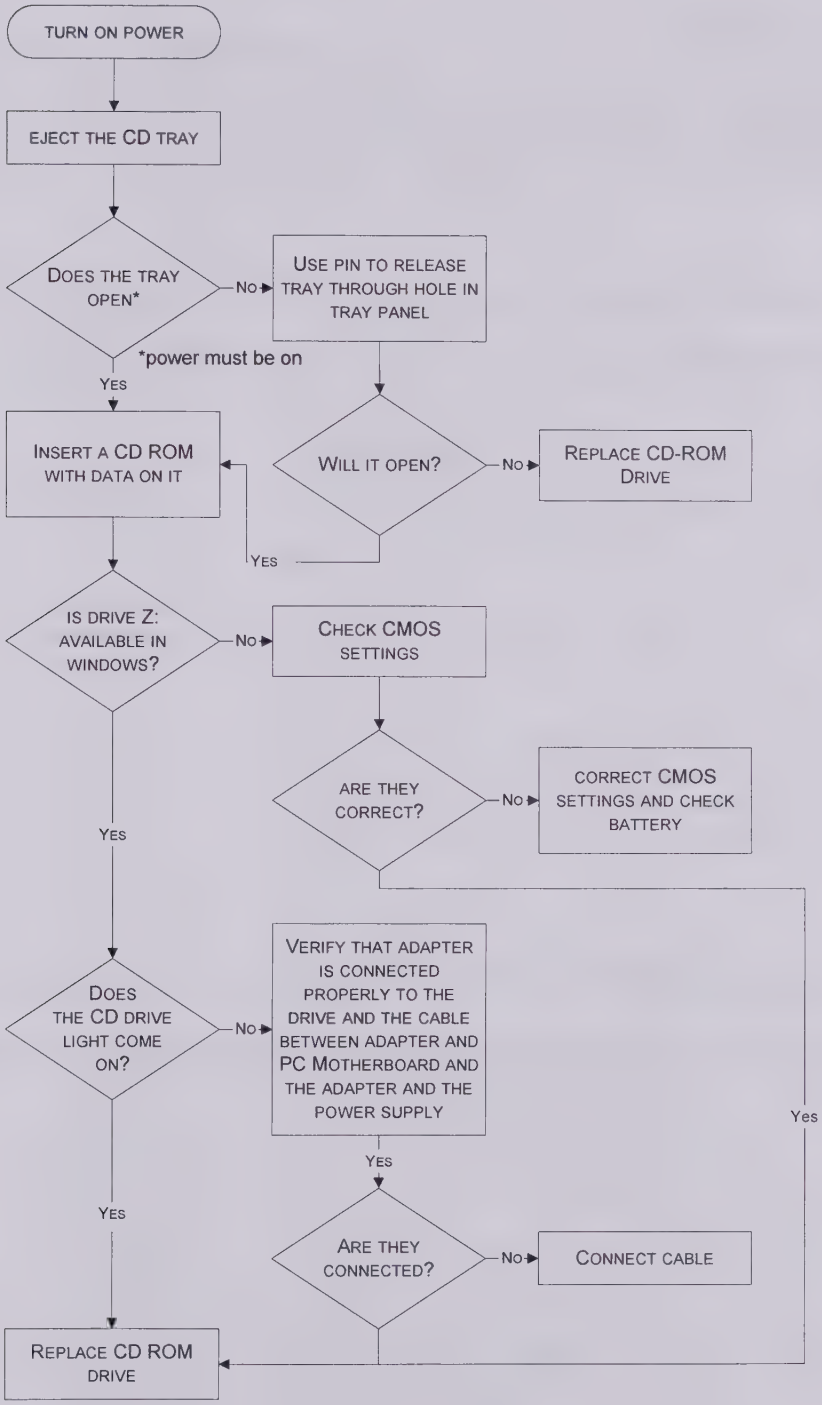

6.8.13 Vertical Accuracy Problem

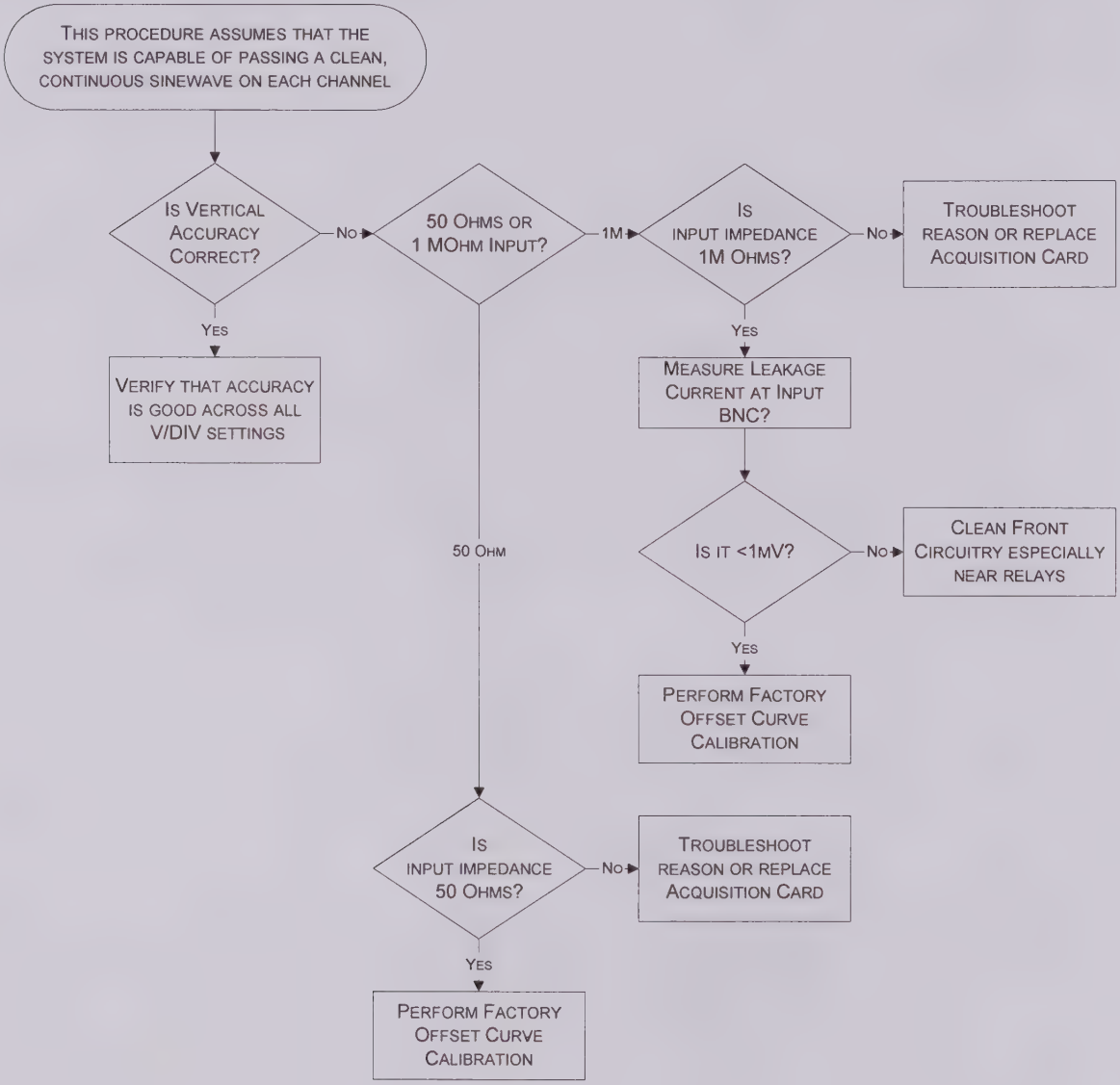

7. Replaceable Parts

To order parts, contact your local LeCroy service office. A list of the service centers is given in section 2 of this manual. For boards, you can either order a new board or an exchange board. Exchange assemblies are factory repaired, inspected, tested and calibrated. If you order an exchange board, you must return the defective board.

This section applies to the following model:

WaveRunner 6030, 6050, 6051, 6100, 6200 Field Replaceable Units

Component	Description
227200020	Celeron Processor 2.0GHz
258000008	TFT/Touchscreen Assembly
330000033	CD-ROM DRIVE 33.3MB
334600003	Processor Board (requires 2.0 Ghz Celeron)
335830015	CD-R/W Drive 24x Speed Half-Ht
900888-00	WR 6200 2 GHz 5 GS/s 4 Ch Acquisition Board
900890-00	PCI Interface
900896-00	4 Channel Encoder Board
901740-00	2 Channel Encoder Board
901761-00	Top Cover Assy
901763-00	WR 6051 500 MHz 5 GS/s 2 Ch Acquisition Board
901764-00	WR 6050 500 MHz 5 GS/s 4 Ch Acquisition Board
901765-00	WR 6100 1 GHz 5 GS/s 4 Ch Acquisition Board
901806-00	WR 6030 350 MHz 2.5 GS/s 4 Ch Acquisition Board
901851-00	USB Hub
901949-00	AGP/DVO Interface

WaveRunner 6030A, 6050A, 6051A, 6100A, 6200A Field Replaceable Units

Component	Description
227200020	Celeron Processor 2.0GHz
330000033	CD-ROM DRIVE 33.3MB
334600003	Processor Board (requires 2.0 Ghz Celeron)
335830015	CD-R/W Drive 24x Speed Half-Ht
900890-00	PCI Interface
902373-00	4 Channel Encoder Board
902375-00	2 Channel Encoder Board
902434-00	Top Cover Assy
902448-00	TFT/Touchscreen Assembly
902572-00	AGP/DVO Interface
902579-00	USB Hub with Audio
902600-00	WR 6030A 350 MHz 2.5 GS/s 4 Ch Acquisition Board
902601-00	WR 6051A 500 MHz 5 GS/s 2 Ch Acquisition Board
902602-00	WR 6050A 500 MHz 5 GS/s 4 Ch Acquisition Board
902603-00	WR 6100A 1 GHz 5 GS/s 4 Ch Acquisition Board
902604-00	WR 6200A 2 GHz 5 GS/s 4 Ch Acquisition Board

7.1 900888-00: WR6020 2 GHz, 5GS/s 4 Ch Acq Board

Part Number	Qty	Description
309000010	1	Crystal Oscillator 10MHZ 9PPM
335970001	1	Probe Hook
402120004	1	Conn RT Angle Fem Bnc
416162005	1	Switch R/A PCB Mtg SPDT MOM
430500003	4	20DB Attenuator Relay DC-3GHZ
454000018	1	Hdr Sold Tail Male 18 Pin HI T
454004002	1	Conn Receptacle USB R/A 4 Pos
454016002	1	Conn Hdr Vert 16 Pos Wire-BD
454022001	1	HEADER VERT 22 POS WIRE BD
454117003	4	Friction Header Straight .1 CE
454312010	4	Hdr Sold Tail/Male 10
469040002	1	Metal Banana Jack/Binding Post
505000013	2	CPU Cooler for Intel P4
520000102	1	Spacer Nylon TO-8V
522632120	6	Standoff Hex 6-32X5/8 F/F
524632015	4	Standoff Hex 6-32 X 1/2 FF
550011106	10	Screw Pan HD M2X6 Blk W/Nylock
551620100	10	#2 Flat Washer S.steel/Black O
555465002	1	Washer Lock Split 1/4
561632405	16	Screw TX Pan #6-32UNC 5/16" S1
709614300	5	Bulkhead Receptical Female Bnc
709614301	5	BNC Lock Washer
709614302	5	BNC Nut
7093XXP01	5	Right Angle Recept. Connector
7093XXP41	5	Probe Holder
7093XXP91	5	Probe Ring Contact
901140-00	4	Chip Atten. 3dB .5% Trim Res
901251-00	1	THERMAL TAPE DIE-CUT 13X13mm
901257-00	1	HEATSINK CLIP PLASTIC
901336-00	1	Heatsink S65 MST/MTB
901436-00	1	S65 Front Card Panel Assy Update
901437-00	2	Heatsink Base - HAD
901439-00	2	S65 backbone
901440-00	1	Heatsink Base mst/mtb
901441-00	1	Heatsink clip mst-mtb
901467-00	6	Thermal Gap Pad Die Cut
901562-00	1	FE Heatsink - 30mm
901586-00	1	S65 MAINBOARD Assy
901609-00	1	EMI Shield
901622-00	1	EMI shield - 10 GHZ clock
901685-00	5	Upper front end EMI shield
901686-00	5	Lower front end EMI shield
901693-00	1	Gap pad MST die cut

900888-00: WR6020 2 GHz, 5GS/s 4 Ch Acq Board (con't)

Part Number	Qty	Description
901694-00	1	Gap pad HTB die cut
901709-00	5	Malico 30mm heat sink assy
901790-00	2	S65 CLOCK EMI SHIELD 0.4 IN. H
901807-00	1	ALUM. SPACER
901835-00	1	CABLE S65 10GHz MTB COAX
901835-01	1	CABLE S65 10GHz CH1 COAX
901835-02	1	CABLE S65 10GHz CH3 COAX
901836-00	1	Waverunner Acq. PCB
CH599041022	1	Heat Sink Compound 251
HAD639C-02	2	Packaged MAD440E 10GS/s SiGe
HFE653B	5	Front End Amplifier
HTB645	1	Hybrid Pkgd Timebase Trigger
MAM439	6	Monolithic 8 Megabyte Dram Mem
MST429A	1	IC Smart Trigger Gate-Array
SM158021002	10	Cap Variable 0.5-2.5pF 250V
SM158070200	10	Cap Variable 4.5-20.0 PF
SM185457102	5	Res Vari Cermet 1 K
SM185457201	1	Res Vari Cermet 200 Ohms
SM185457503	5	Res Vari Cermet 50 K
SM200180032	1	IC 2-in OR Gate 74VHC1G32
SM200588014	1	Hex Schmitt-Trig Inv 74HCT14
SM201274033	1	IC Ecl Divide BY 4 MC10EL33
SM201570016	2	IC Ecl Diff Receiver 10EL16D
SM201774025	3	Diff Ecl-Ttl Transl 10ELT25
SM202057002	1	IC Triple 2-CH Analog Mux
SM202059003	1	ECL Diff Rec/Driv w/Enable Out
SM202100004	1	IC PLL Freq Synth 4106 6 GHz
SM202102001	1	IC ECL /PECL 1:5 DIFF CLK DRVR
SM202107002	1	100EP57 4:1 MUX
SM205129160	1	IC FLASH MEM 16 MBIT HY29LV160 TSOP-48
SM205200002	1	IC 8M x 8 Bit 133MHz SDRAM
SM205616001	5	IC 8-Bit Shift Reg 74LV594ADR
SM205625616	1	IC 256K X 16 CMOS SRAM
SM205715003	2	IC PAL FG456 Fine-Pitch BGA
SM206178125	1	IC Quad Bfr Line Drvr 3 State
SM206370024	3	IC Ttl TO Diff Ecl Transl MC10
SM207010002	3	IC CMOS 8 BIT LOW RES BUS SWITCH
SM207010011	2	IC Quad 10-Bit DAC LTC1664
SM207010014	1	16 Bit Buffer/Driver 3-State
SM207131660	1	IC Dac Octal 10BIT Serial Unip
SM207231654	4	IC Dual 14-Bit Serial Dac
SM207770442	5	IC Analog Switch DG442
SM207944351	5	OCTAL ANALOG MUX/DEMUX 74HCT4351
SM208400001	3	IC MMIC Amplifier 12GHz NBB-300
SM208400002	1	IC MMIC Amplifier 8GHz NBB-400

900888-00: WR6020 2 GHz, 5GS/s 4 Ch Acq Board (con't)

Part Number	Qty	Description
SM208450686	5	IC Wideband OP Amp OPA686
SM208470353	8	IC Dual OP Amp LF353
SM208470705	10	IC OP Amp Picoamp Input AD705
SM208472022	7	Opamp, Dual, Low Pwr TLE2022C
SM208475460	5	IC OP Amp Sin-Sup RtoR Ins Amp
SM208476482	2	IC Dual OP Amp Rail TO Rail 64
SM208550004	8	IC Volt Reg Pos Adjust LDO
SM208550337	1	IC Volt Reg Adj LM337
SM208550821	1	Voltage Monitor MAX821
SM208556138	1	IC Volt Ref 4.096V 0.1% 25ppm
SM208701023	11	IC Temperature Sensor
SM208909850	1	DDS-125MHZ Cmos Synth AD9850
SM227110161	1	16 BIT MICROCONTROLLER C161PI
SM229020150	5	MLC Trans Volt Suppressor
SM232022824	1	Diode Array Schottky HSMS2824
SM232030001	10	Diode Array Schottky HSMS-282C
SM232442828	5	Diode Bridge HSMS2828
SM236030099	10	Diode SO-Pkg BAV99
SM252005303	10	Pin Diode Bar 63-03W
SM252023066	20	Pin Diode Bar 66
SM252023304	5	Dual Pin Diode Silicon Bar 63-
SM256232013	1	Diode Light Emitting Red
SM270050520	15	NPN 9GHZ Wideband Transistor
SM270130092	6	Transistor Npn BFR92A
SM270330848	2	Transistor Npn BC848C
SM275030550	5	Transistor Pnp BF550
SM275132907	1	Transistor Pnp 2907A
SM280122416	5	Trans. Jfet N MMBF4416/LC6A
SM280217505	2	Mosfet, Nchanel, 75A, 50V, D2P
SM281115003	4	P-CH Hdtmos Pwr E-Fet MTB50P03
SM289772003	5	Transistor Array 2003
SM300092390	1	Inductor Wound 2% 39 NH
SM300095151	2	Inductor Wound 150NH
SM300600009	2	Inductor 9.3uH 7.2A Wound
SM301001001	19	BEAD FERRITE
SM301001002	6	Bead SHF 0.3A
SM301001016	4	Inductor Pwr Toroid 272uH .36A
SM301001017	3	Inductor Chip 10% 15uH 1210
SM301001018	1	Inductor Shielded 100uH 10%
SM301004001	70	Bead Ferrite 50 Ohms 3AMPS 120
SM311000005	1	Crystal Oscillator 16 MHz 3.3V
SM311000006	1	Voltage Controlled Oscillator 5 GHz
SM430530001	20	Relay Smd Dual Form C 5V
SM431030005	5	Relay SPDT HF 50 Ohm 4.5V

900888-00: WR6020 2 GHz, 5GS/s 4 Ch Acq Board (con't)

Part Number	Qty	Description
SM433695250	2	PTC Resettable Device 2.5A
SM453005001	3	Header 1 x 5 Shrouded
SM454204040	2	Hdr Male 40 Pos Idc
SM507000002	2	Heatsink Surface Mount TO-263
SM651081102	8	Res Chip 0.1% 1 Kohm
SM652000005	10	Res RF 100 Ohm .25% 1/3W 1206
SM652041000	49	Res Zero ohms
SM652041011	25	Res Chip 1% 49.9 Ohms
SM652041200	11	Res 20 Ohms +/-1% 1/16W 0402 S
SM652061000	4	Res Chip 0 Ohm Jumper
SM652061000	11	Res Chip 0 Ohm Jumper
SM652061100	5	Res Chip 1% 10.0 Ohm .063W
SM652061100	10	Res Chip 1% 10.0 Ohm .063W
SM652061101	4	Res Chip 1% 100 Ohm .063W
SM652061101	5	Res Chip 1% 100 Ohm .063W
SM652061101	7	Res Chip 1% 100 Ohm .063W
SM652061101	10	Res Chip 1% 100 Ohm .063W
SM652061102	5	Res Chip 1% 1.0K Ohm .063W
SM652061102	16	Res Chip 1% 1.0K Ohm .063W
SM652061102	23	Res Chip 1% 1.0K Ohm .063W
SM652061103	7	Res Chip 1% 10K Ohm .063W
SM652061103	19	Res Chip 1% 10K Ohm .063W
SM652061105	1	Res Chip 1% 1.0M Ohm .063W
SM652061105	5	Res Chip 1% 1.0M Ohm .063W
SM652061106	5	Res Chip 1% 10M Ohm .063W
SM652061112	10	Res Chip 1% 1.1K Ohm .063W
SM652061121	15	Res Chip 1% 120 Ohm .063W
SM652061121	50	Res Chip 1% 120 Ohm .063W
SM652061131	5	Res Chip 1% 130 Ohm .063W
SM652061154	5	Res Chip 1% 150K Ohm .063W
SM652061161	15	Res Chip 1% 160 Ohm .063W
SM652061200	1	Res Chip 1% 20.0 Ohm .063W
SM652061201	1	Res Chip 1% 200 Ohm .063W
SM652061201	5	Res Chip 1% 200 Ohm .063W
SM652061201	15	Res Chip 1% 200 Ohm .063W
SM652061203	11	Res Chip 1% 20K Ohm .063W
SM652061221	18	Res Chip 1% 220 Ohm .063W
SM652061222	2	Res Chip 1% 2.2K Ohm .063W
SM652061222	4	Res Chip 1% 2.2K Ohm .063W
SM652061222	5	Res Chip 1% 2.2K Ohm .063W
SM652061240	1	Res Chip 1% 24.0 Ohm .063W
SM652061240	5	Res Chip 1% 24.0 Ohm .063W
SM652061271	2	Res Chip 1% 270 Ohm .063W
SM652061271	2	Res Chip 1% 270 Ohm .063W
SM652061271	10	Res Chip 1% 270 Ohm .063W

900888-00: WR6020 2 GHz, 5GS/s 4 Ch Acq Board (con't)

Part Number	Qty	Description
SM652061271	20	Res Chip 1% 270 Ohm .063W
SM652061273	5	Res Chip 1% 27K Ohm .063W
SM652061273	20	Res Chip 1% 27K Ohm .063W
SM652061330	5	Res Chip 1% 33.0 Ohm .063W
SM652061332	4	Res Chip 1% 3.3K Ohm .063W
SM652061332	5	Res Chip 1% 3.3K Ohm .063W
SM652061334	1	Res Chip 1% 330K Ohm .063W
SM652061361	3	Res Chip 1% 360 Ohm .063W
SM652061361	5	Res Chip 1% 360 Ohm .063W
SM652061361	15	Res Chip 1% 360 Ohm .063W
SM652061390	5	Res Chip 1% 39.0 Ohm .063W
SM652061390	35	Res Chip 1% 39.0 Ohm .063W
SM652061393	1	Res Chip 1% 39K Ohm .063W
SM652061393	5	Res Chip 1% 39K Ohm .063W
SM652061393	15	Res Chip 1% 39K Ohm .063W
SM652061394	5	Res Chip 1% 390K Ohm .063W
SM652061430	10	Res Chip 1% 43.2 Ohm .063W
SM652061431	1	Res Chip 1% 430 Ohm .063W
SM652061432	6	Res Chip 1% 4.3K Ohm .063W
SM652061471	5	Res Chip 1% 470 Ohm .063W
SM652061510	5	Res Chip 1% 51.0 Ohm .063W
SM652061510	12	Res Chip 1% 51.0 Ohm .063W
SM652061510	25	Res Chip 1% 51.0 Ohm .063W
SM652061511	2	Res Chip 1% 510 Ohm .063W
SM652061512	5	Res Chip 1% 5.1K Ohm .063W
SM652061513	5	Res Chip 1% 51K Ohm .063W
SM652061562	5	Res Chip 1% 5.6K Ohm .063W
SM652061681	5	Res Chip 1% 681 Ohm .063W
SM652061751	1	Res Chip 1% 750 Ohm .063W
SM652061751	5	Res Chip 1% 750 Ohm .063W
SM652061824	5	Res Chip 1% 820K Ohm .063W
SM652061912	5	Res Chip 1% 9.1K Ohm .063W
SM652101101	2	Res Chip (E24) 1% 100 Ohm
SM652101302	1	Res Chip (E24) 1% 3 K
SM653041297	5	RES CHIP 1% 100 OHMS 0402
SM653101226	1	Res Chip 1% 18.2 Ohms
SM653101262	9	Res Chip 1% 43.2 Ohms
SM653101277	7	Res Chip 1% 61.9 Ohms
SM653101285	5	Res Chip 1 % 75.0 Ohms
SM653101297	18	Res Chip 1% 100 Ohms
SM653101322	17	Res Chip 1% 182 Ohms
SM653101326	7	Res Chip 1% 200 Ohms
SM653101334	8	Res Chip 1% 243 Ohms
SM653101347	1	Res Chip 1% 332 Ohms

900888-00: WR6020 2 GHz, 5GS/s 4 Ch Acq Board (con't)

Part Number	Qty	Description
SM653101354	14	Res Chip 1% 392 Ohms
SM653101377	9	Res Chip 1% 681 Ohms
SM653101393	33	Res Chip 1% 1.00 K
SM653101397	1	Res Chip 1% 1.10 K
SM653101401	4	Res Chip 1% 1.21 K
SM653101410	13	Res Chip 1% 1.50 K
SM653101422	4	Res Chip 1% 2.00 K
SM653101422	12	Res Chip 1% 2.00 K
SM653101422	35	Res Chip 1% 2.00 K
SM653101426	9	Res Chip 1 % 2.21K
SM653101430	3	Res Chip 1% 2.43 K
SM653101435	2	Res Chip 1% 2.74 K
SM653101458	10	Res Chip 1 % 4.75 K
SM653101461	7	Res Chip 1% 5.11 K
SM653101469	1	Res Chip 1% 6.19 K
SM653101477	13	Res Chip 1% 7.50 K
SM653101489	4	Res Chip 1 % 10.0 K
SM653101489	21	Res Chip 1 % 10.0 K
SM653101506	5	Res Chip 1% 15.0 K
SM653101518	7	Res Chip 1% 20.0 K
SM653101539	6	Res Chip 1% 33.2 K
SM653101589	9	Res Chip 1% 110 K
SM654101000	11	Chip Jumper Zero Ohms
SM654101000	12	Chip Jumper Zero Ohms
SM655020002	10	RES CHIP 1% 174 OHMS
SM655020017	30	Res Thk Film 1% 1K Ohm 1/16W
SM655020025	18	Res Thk Film 1% 2.74 Ohm 1/16W
SM655030040	10	Res Thk Film +/-1% 5.11 Ohm .1W
SM655030042	5	Res Thk Film 1% 5.6M Ohm 1/16W
SM655040022	5	Res Chip .5% 50ppm 180K 150V
SM655040023	5	Res Chip .5% 50ppm 240K 150V
SM655040024	40	Res Chip .5% 50ppm 300K 150V
SM655040025	10	Res Chip .5% 50ppm 110K 150V
SM655040026	1	Res Thk Film 41.2 Ohm .5% 1/8W
SM655040027	2	Res Thk Film 20 Ohm .5% 1/8W
SM655080004	5	Res Thk Film 1 Ohm +/- 5% 1/2W
SM655080005	8	Res Thk Film 1% 105 Ohm 1/2W
SM655080009	1	Res Thk Film 0.5% 41.2 Ohm 1W
SM661010002	10	Cap Cera Chip 27PF +/- 5%
SM661011001	5	Cap Cera Chip 3.9pF 200V
SM661028100	1	Cap Cera Chip 1UF 10V
SM661028100	15	Cap Cera Chip 1UF 10V
SM661066102	5	Cap Cera Chip 10% 1000PF/50V
SM661066102	10	Cap Cera Chip 10% 1000PF/50V
SM661066102	88	Cap Cera Chip 10% 1000PF/50V

900888-00: WR6020 2 GHz, 5GS/s 4 Ch Acq Board (con't)

Part Number	Qty	Description
SM661068104	5	Cap Cera Chip 0.1uF 0603
SM661068104	25	Cap Cera Chip 0.1uF 0603
SM661068104	120	Cap Cera Chip 0.1uF 0603
SM661073068	5	Cap Cera 6.8+/- 0.1PF 50V Npo
SM661073300	5	Cap Cera 30PF+/- 5% 50V Npo
SM661073331	3	Cap Cera 330PF+/- 5% 50V Npo
SM661073820	7	Cap Cera 82PF+/- 5% 50V Npo
SM661165102	3	Cap Cera Chip 1000PF
SM661207103	6	Cap Cera Chip 20% .01 UF
SM661207104	10	Cap Cera Chip 20 % .1 UF
SM661207104	223	Cap Cera Chip 20 % .1 UF
SM661207223	5	Cap Cera Chip 20% .022 UF
SM661255015	1	Cap Cera Chip 1.5 PF
SM661255121	3	Cap Cera Chip 5% 120 PF
SM661540056	10	Cap Cera Chip 5.6PF 500V
SM661540068	5	Cap Cera Chip 6.8PF 500V
SM662131003	47	Cap Cera Chip 5% 50V .01 UF
SM662135001	14	Cap Cera +/-.1% 50V 1.2pF NPO
SM662151001	42	Cap Cera Chip 10% 16V 0.1 UF
SM662152001	18	Cap Cera Chip 10% 16V 100nF
SM662212001	5	Cap Cera .015uF 10% 25V X7R
SM662232001	8	10000pf 0603 capacitor
SM662241001	5	Cap Cera 22pF +/- 5% 100V Npo
SM662252001	5	Cap Cera .068uF 10% 16V X7R
SM662382001	5	Cap Cera 1000pF 10% 500V X7R
SM662432001	1	Cap Cera 4700pF 10% 50V X7R
SM662432002	1	Cap Cera Chip 0.22uF 10% 50V
SM666267227	22	Cap Tant 220UF 10V 20%
SM668010335	15	Cap,tant 3.3UF/10V 20% L/Esr
SM668016226	58	Cap tant 22UF/16V 20 % L Esr
SM668025106	19	Cap,tant 10UF/25V 20% L Esr
SM668025334	10	Cap,tant .33UF/25V 20% L/Esr
SM669049001	28	Inductor 3.3 nH +/-0.3 nH

7.2 900890-00: PCI Interface

Part Number	Qty	Description
454040002	2	Conn Hdr 40-POS Male AMP Latch
530040006	1	Buzzer 85DB 4 TO 7V
901824-00	1	WaveRunner Acquisition interface PCB
SM205108433	1	IC Eeprom 4K Bit W/ Serial Num
SM205717001	1	IC PAL PQ208 Plastic QFP
SM207010016	5	IC CMOS 10 Bit 2 Port Bus Switch
SM208540002	1	IC Adj Pos Volt Reg 3A LDO
SM236020050	2	Diode Rectifier 50V 1A
SM280120138	1	N Channel Pwr Mosfet BSS138LT
SM311200125	1	Gigabit Crystal Osc. 125Mhz
SM652061000	3	Res Chip 0 Ohm Jumper
SM652061103	1	Res Chip 1% 10K Ohm .063W
SM652061221	15	Res Chip 1% 220 Ohm .063W
SM652061240	1	Res Chip 1% 24.0 Ohm .063W
SM652061301	1	Res Chip 1% 300 Ohm .063W
SM652061332	1	Res Chip 1% 3.3K Ohm .063W
SM652061472	7	Res Chip 1% 4.7K Ohm .063W
SM655030037	46	Res Thk Film 1% 121 Ohm 1/16W
SM655030041	1	Res Thk Film 1% 53.6 Ohm 1/16W
SM661068104	39	Cap Cera Chip 0.1uF 0603
SM662232001	6	10000pf 0603 capacitor
SM666086022	4	Cap Mold Tant Chip 22 UF

7.3 900894-00: Processor Assy

Part Number	Qty	Description
227500020	1	Celeron Processor 2.0GHz OEM
330000005	1	Hard Drive 40GB 3.5" 7200 RPM
334600003	1	Motherboard P4 uATX
334740001	1	Memory Module 256MB PC2100 P4
377242001	1	License Label MS W2K Pro
505000013	1	CPU Cooler for Intel P4
900549-02	1	PC IO Label
CH599041022	0	Heat Sink Compound 251

7.4 900896-00: 4 Channel Encoder Board

Part Number	Qty	Description
425100007	5	Encoder 20mm Detent
425100009	4	Encoder 20mm Detent JOG
425100010	9	Encoder 20mm Detent JOG PB
901788-00	1	WaveRunner 4-Ch Front Panel PCB
SM190105001	1	Resistor Network 10K Ohm 5%
SM190105003	2	Resistor Network 100K Ohm 5%
SM202051011	2	IC 3-to-8 Line Decoder VHC138
SM202109001	1	IC 16-Bit IIC LED Driver PCA9552
SM207630574	1	IC 8-Bit I/O Expander I2C Bus
SM253032820	59	Diode Schottky 2820
SM256000001	1	DIODE LED RED 2MM
SM256000004	1	DIODE LED BLUE 2MM
SM256000005	9	DIODE LED AQUA GREEN 2MM
SM256000006	1	DIODE LED SP YELLOW 2MM
SM453026002	1	Conn .050" Hdr 26-Pos Male
SM653101273	1	Res Chip 1% 56.2 Ohms
SM653101301	8	Res Chip 1% 110 Ohms
SM653101343	1	Res Chip 1% 301 Ohms
SM653101489	8	Res Chip 1 % 10.0 K
SM654101000	2	Chip Jumper Zero Ohms
SM654101000	2	Chip Jumper Zero Ohms
SM654101000	2	Chip Jumper Zero Ohms
SM661207104	4	Cap Cera Chip 20 % .1 UF
SM666487105	2	Cap Mold EIA Chip 1uF 10%

7.5 901949-00: AGP/DVO Interface

Part Number	Qty	Description
901948-00	1	DVO Display PCB
SM205108132	1	IC Eeprom 32K Bit IIC Bus
SM207010002	1	IC CMOS 8 BIT LOW RES BUS SWITCH
SM207010013	1	Display Driver DVO to LVDS TFT
SM208542915	1	1.5A Low-Dropout volt reg adj
SM280120605	2	Low Power Nmosfet
SM281126402	2	P-Channel Mosfet IRLML6402
SM311414318	1	Crystal Oscillator 14.31818MHZ
SM453005002	1	Header 1 x 5 Shrouded Side Entry
SM453020004	1	Conn Hdr R/A 20 Pos Wire-BD
SM652061101	2	Res Chip 1% 100 Ohm .063W
SM652061102	2	Res Chip 1% 1.0K Ohm .063W
SM652061102	3	Res Chip 1% 1.0K Ohm .063W
SM652061102	15	Res Chip 1% 1.0K Ohm .063W
SM652061510	2	Res Chip 1% 51.0 Ohm .063W
SM652101102	4	Res Chip (E24) 1% 1 K
SM652101222	4	Res Chip (E24) 1% 2.2 K
SM652101331	1	Res Chip (E24) 1% 330 Ohm
SM653101458	6	Res Chip 1 % 4.75 K
SM653101653	1	Res Thk Flm 1% 511K Ohm
SM654101000	2	Chip Jumper Zero Ohms
SM654101000	1	Chip Jumper Zero Ohms
SM655030036	2	Res Thk Film 1% 80.6 Ohm 1/16W
SM655040017	4	Res Chip 1.24K OHM 1% 1/10W 0805.
SM661028100	1	Cap Cera Chip 1UF 10V
SM661207103	4	Cap Cera Chip 20% .01 UF
SM661207104	14	Cap Cera Chip 20 % .1 UF
SM661255471	2	Cap Cera Chip 5 % 470 PF
SM668016226	5	Cap tant 22UF/16V 20 % L Esr
SM669080181	4	Chip Ferrite Bead

7.6 901593-00: 4 channel front frame

Part Number	Qty	Description
258000007	1	LCD Backlight Inverter
258000008	1	LCD 8.4" 800x600 w/TP 185 Nits
519260001	1	Shorty Bushing ID .312 OD 7/16"
530009005	3	Shield (RFI/EMI) Finger Stock
544220007	1	Spring Compression 0.34L
561440404	21	SCREW TX PAN 4# -40UNF 1/4IN S1
561440406	3	Screw TX Pan #4-40 UNF 3/8" S1
563425006	9	SCREW TX PAN M2.5X0.4-6MM S1
575100004	3	Washer Flat M2.5 6mmOD .5mmS
592060001	1	3.5 Inch Cable Assy 26-Pos
594120004	2	Cable Tie With Screw Base
594120006	1	Tiewrap
594120010	1	Cable Tie R/A Mount 1/8" Dia.
900896-00	1	WaveRunner Front Panel Assembly
901279-00	1	WaveRunner front chassis panel assembly
901433-00	1	Elastomeric Keymat for Front Panel
901444-00	1	WaveRunner 4 channel bezel
901445-00	1	WaveRunner power button
901459-00	1	Shield - Backlight Inverter
901489-00	1	WaveRunner Proto Front Panel Overlay
901524-00	1	Cable Assy BL Power
901527-00	1	Cable Assy LCD Display
901582-00	9	Knob small
901583-00	7	Knob medium
901584-00	2	Knob large
901700-00	1	INPUT OVERLAY
901851-00	1	WaveRunner Hub Assembly

7.7 901594-00: 2 channel front frame

Part Number	Qty	Description
258000007	1	LCD Backlight Inverter
258000008	1	LCD 8.4" 800x600 w/TP 185 Nits
519260001	1	Shorty Bushing ID .312 OD 7/16"
530009005	3	Shield (RFI/EMI) Finger Stock
544220007	1	Spring Compression 0.34L
561440404	22	SCREW TX PAN 4# -40UNF 1/4IN S1
561440406	2	Screw TX Pan #4-40 UNF 3/8" S1
563425006	10	SCREW TX PAN M2.5X0.4-6MM S1
575100004	3	Washer Flat M2.5 6mmOD .5mmS
592060001	1	3.5 Inch Cable Assy 26-Pos
594120004	2	Cable Tie With Screw Base
594120006	1	Tiewrap
594120010	1	Cable Tie R/A Mount 1/8" Dia.
901279-00	1	WaveRunner front chassis panel assembly
901445-00	1	WaveRunner power button
901459-00	1	Shield - Backlight Inverter
901524-00	1	Cable Assy BL Power
901527-00	1	Cable Assy LCD Display
901582-00	7	Knob small
901583-00	5	Knob medium
901584-00	2	Knob large
901700-00	1	INPUT OVERLAY
901722-00	1	Elastomeric keymat - 2 channel
901740-00	1	WaveRunner 2-Ch Front Panel Assembly
901756-00	1	WaveRunner 2 channel bezel
901757-00	1	WaveRunner 2 Channel Front Frame Overlay
901851-00	1	WaveRunner Hub Assembly

7.8 901697-00: CD R/W Assy

Part Number	Qty	Description
335830015	1	CD-R/W Drive 24x Speed Half-Ht
350480007	1	Gasket, EMI Fabric 3X3MMX3.9IN
454315004	1	Hdr Sold Tail/Male 4
454510104	1	Hdr Vert Male Shrouded 4 Pos
561632604	6	Screw TX Pan #6-32 UNC 1/4" S3
563420003	4	SCREW TX PAN M2-0.4 X 3MM S1
563460006	2	SCREW TX PAN M2X0.4-6MM S1
900517-00	2	Retaining Spacer M2 2.85mm long
901502-00	1	S65 CDROM Adapter PCB
901504-00	1	CDROM Adapter PCA
901525-00	1	Cable Assy CDROM Drive
901856-00	1	S65 CD-ROM BRACKET
901857-00	1	S65 CD-ROM EMI COVER
901858-00	1	CD-ROM Mounting Bracket
SM454204040	1	Hdr Male 40 Pos Idc
SM454520050	1	Conn Header 50 PIN Smt

7.9 901740-00: 2 Channel Encoder Board

Part Number	Qty	Description
425100007	3	Encoder 20mm Detent
425100009	4	Encoder 20mm Detent JOG
425100010	7	Encoder 20mm Detent JOG PB
901741-00	1	S65 2-Ch Front Panel PCB
SM190105001	1	Resistor Network 10K Ohm 5%
SM190105003	2	Resistor Network 100K Ohm 5%
SM202051011	2	IC 3-to-8 Line Decoder VHC138
SM202109001	1	IC 16-Bit IIC LED Driver PCA9552
SM207630574	1	IC 8-Bit I/O Expander I2C Bus
SM253032820	47	Diode Schottky 2820
SM256000001	1	DIODE LED RED 2MM
SM256000005	8	DIODE LED AQUA GREEN 2MM
SM256000006	1	DIODE LED SP YELLOW 2MM
SM453026002	1	Conn .050" Hdr 26-Pos Male
SM653101301	8	Res Chip 1% 110 Ohms
SM653101343	1	Res Chip 1% 301 Ohms
SM653101489	8	Res Chip 1 % 10.0 K
SM654101000	2	Chip Jumper Zero Ohms
SM654101000	3	Chip Jumper Zero Ohms
SM661207104	4	Cap Cera Chip 20 % .1 UF
SM666487105	2	Cap Mold EIA Chip 1uF 10%

7.10 901754-00: Chassis Mechanical

Part Number	Qty	Description
485025001	1	SET of 4 Feet Black
561440404	6	SCREW TX PAN 4# -40UNF 1/4IN S1
561632405	21	Screw TX Pan #6-32UNC 5/16" S1
561632408	4	Screw TX Pan #6-32 UNC 1/2" S1
561632604	30	Screw TX Pan #6-32 UNC 1/4" S3
562632403	18	Screw TX Flat UCUT #6-32 3/16"
575610002	4	Washer Flat Reg OD Size 6
594120006	5	Tiewrap
900890-00	1	WaveRunner Acquisition Interface
900893-00	1	WaveRunner Power Supply
901277-00	1	WaveRunner Chassis Bottom Assy
901278-00	1	WaveRunner Motherboard Support Tray
901446-00	4	WaveRunner Rear Foot
901461-00	1	SYSTEM FAN ASSEMBLY
901496-00	1	Waverunner 6100 FP Overlay
901523-00	2	Cable Assy Acquisition
901526-00	1	Cable Assy Hard Drive
901529-00	1	Cable Assy Switch
901530-00	1	Cable Assy Trig and Ready LED
901531-00	1	Cable Assy USB
901593-00	1	WaveRunner 4-ch front frame assembly
901647-00	1	STIFFENER RIB
901754-00	1	4CH 1GHz 5GS/s DSO
901761-00	1	WaveRunner Upper Cover (no printer)
901765-00	1	4CH 1GHz 5GS/s ACQ ASSY
901768-00	1	WR6XXX 4 CH ACCESSORIES
901853-00	1	CD Reader Assembly
901878-00	1	WaveRunner Shipping Package Assy
901880-00	1	GPIB Blanking Plate
901887-00	1	Oscilloscope Backbone Licence
901898-00	2	WaveRunner PC CARD RETAINER
901936-00	1	WaveRunner Serial Number label
901949-00	1	DVO Display PCA

7.11 901761-00: Top Cover Assy

Part Number	Qty	Description
530301022	1	Handle Assembly 9" 184F
562632404	6	Screw TX Flat #6-32UNC 1/4" S1
901280-00	1	WaveRunner Chassis Top
901487-00	4	WaveRunner Side Foot

7.12 901763-00: WR 6051 500 MHz 5 GS/s 2 Ch Acquisition Board

Part Number	Qty	Description
309000010	1	Crystal Oscillator 10MHZ 9PPM
335970001	1	Probe Hook
402120004	1	Conn RT Angle Fem Bnc
416162005	1	Switch R/A PCB Mtg SPDT MOM
430500003	2	20DB Attenuator Relay DC-3GHZ
454000018	1	Hdr Sold Tail Male 18 Pin HI T
454004002	1	Conn Receptacle USB R/A 4 Pos
454016002	1	Conn Hdr Vert 16 Pos Wire-BD
454022001	1	HEADER VERT 22 POS WIRE BD
454117003	3	Friction Header Straight .1 CE
454312010	4	Hdr Sold Tail/Male 10
469040002	1	Metal Banana Jack/Binding Post
505000013	1	CPU Cooler for Intel P4
522632120	6	Standoff Hex 6-32X5/8 F/F
524632015	4	Standoff Hex 6-32 X 1/2 FF
550011106	6	Screw Pan HD M2X6 Blk W/Nylock
551620100	6	#2 Flat Washer S.steel/Black O
561632405	16	Screw TX Pan #6-32UNC 5/16" S1
709614300	3	Bulkhead Receptical Female Bnc
709614301	3	BNC Lock Washer
709614302	3	BNC Nut
7093XXP01	5	Right Angle Recept. Connector
7093XXP41	3	Probe Holder
7093XXP91	3	Probe Ring Contact
901140-00	2	Chip Atten. 3dB .5% Trim Res
901251-00	1	THERMAL TAPE DIE-CUT 13X13mm
901257-00	1	HEATSINK CLIP PLASTIC
901336-00	1	Heatsink S65 MST/MTB
901436-00	1	S65 Front Card Panel Assy Update
901437-00	1	Heatsink Base - HAD
901439-00	2	S65 backbone
901440-00	1	Heatsink Base mst/mtb
901441-00	1	Heatsink clip mst-mtb
901467-00	3	Thermal Gap Pad Die Cut
901562-00	1	FE Heatsink - 30mm
901586-01	1	2ch 500MHz 5GS/s PCA
901609-00	1	EMI Shield
901622-00	1	EMI shield - 10 GHZ clock
901685-00	3	Upper front end EMI shield
901686-00	3	Lower front end EMI shield
901693-00	1	Gap pad MST die cut
901694-00	1	Gap pad HTB die cut
901709-00	5	Malico 30mm heat sink assy

901763-00: WR 6051 500 MHz 5 GS/s 2 Ch Acquisition Board (con't)

Part Number	Qty	Description
901790-00	2	S65 CLOCK EMI SHIELD 0.4 IN. H
901800-00	1	S65 MAINBOARD PCB
901807-00	1	ALUM. SPACER
901835-00	1	CABLE S65 10GHz MTB COAX
901835-01	1	CABLE S65 10GHz CH1 COAX
901835-02	1	CABLE S65 10GHz CH3 COAX
CH599041022	1	Heat Sink Compound 251
HAD639C-02	1	Packaged MAD440E 10GS/s SiGe
HFE653B	3	Front End Amplifier
HTB645	1	Hybrid Pkgd Timebase Trigger
MAM439	3	Monolithic 8 Megabyte Dram Mem
MST429A	1	IC Smart Trigger Gate-Array
SM158011000	6	Cap Variable .5PF-1.3PF Npo CE
SM158070200	10	Cap Variable 4.5-20.0 PF
SM185457102	5	Res Vari Cermet 1 K
SM185457201	1	Res Vari Cermet 200 Ohms
SM185457503	5	Res Vari Cermet 50 K
SM191260100	4	RES/Cap Network 10 Ohm 100 PF
SM200180032	1	IC 2-in OR Gate 74VHC1G32
SM200588014	1	Hex Schmitt-Trig Inv 74HCT14
SM201274033	1	IC Ecl Divide BY 4 MC10EL33
SM201570016	2	IC Ecl Diff Receiver 10EL16D
SM201774025	3	Diff Ecl-Ttl Transl 10ELT25
SM202057002	1	IC Triple 2-CH Analog Mux
SM202059003	1	ECL Diff Rec/Driv w/Enable Out
SM202100004	1	IC PLL Freq Synth 4106 6 GHz
SM202102001	1	IC ECL /PECL 1:5 DIFF CLK DRVR
SM202107002	1	100EP57 4:1 MUX
SM205129160	1	IC FLASH MEM 16 MBIT HY29LV160 TSOP-48
SM205200002	1	IC 8M x 8 Bit 133MHz SDRAM
SM205616001	5	IC 8-Bit Shift Reg 74LV594ADR
SM205625616	1	IC 256K X 16 CMOS SRAM
SM205715003	2	IC PAL FG456 Fine-Pitch BGA
SM206178125	1	IC Quad Bfr Line Drvr 3 State
SM206370024	3	IC Ttl TO Diff Ecl Transl MC10
SM207010002	3	IC CMOS 8 BIT LOW RES BUS SWITCH
SM207010011	2	IC Quad 10-Bit DAC LTC1664
SM207010014	1	16 Bit Buffer/Driver 3-State
SM207131660	1	IC Dac Octal 10BIT Serial Unip
SM207231654	2	IC Dual 14-Bit Serial Dac
SM207770442	5	IC Analog Switch DG442
SM207944351	5	OCTAL ANALOG MUX/DEMUX 74HCT4351
SM208400001	3	IC MMIC Amplifier 12GHz NBB-300
SM208400002	1	IC MMIC Amplifier 8GHz NBB-400
SM208450686	3	IC Wideband OP Amp OPA686

901763-00: WR 6051 500 MHz 5 GS/s 2 Ch Acquisition Board (con't)

Part Number	Qty	Description
SM208470353	8	IC Dual OP Amp LF353
SM208470705	6	IC OP Amp Picoamp Input AD705
SM208472022	7	Opamp, Dual, Low Pwr TLE2022C
SM208475460	5	IC OP Amp Sin-Sup RtoR Ins Amp
SM208476482	2	IC Dual OP Amp Rail TO Rail 64
SM208550004	6	IC Volt Reg Pos Adjust LDO
SM208550337	1	IC Volt Reg Adj LM337
SM208550821	1	Voltage Monitor MAX821
SM208556138	1	IC Volt Ref 4.096V 0.1% 25ppm
SM208701023	11	IC Temperature Sensor
SM208909850	1	DDS-125MHZ Cmos Synth AD9850
SM227110161	1	16 BIT MICROCONTROLLER C161PI
SM229020150	5	MLC Trans Volt Suppressor
SM232022824	1	Diode Array Schottky HSMS2824
SM232030001	10	Diode Array Schottky HSMS-282C
SM232442828	5	Diode Bridge HSMS2828
SM236030099	10	Diode SO-Pkg BAV99
SM252005303	10	Pin Diode Bar 63-03W
SM252023066	20	Pin Diode Bar 66
SM252023304	5	Dual Pin Diode Silicon Bar 63-
SM256232013	1	Diode Light Emitting Red
SM270050520	15	NPN 9GHZ Wideband Transistor
SM270130092	6	Transistor Npn BFR92A
SM270330848	2	Transistor Npn BC848C
SM275030550	5	Transistor Pnp BF550
SM275132907	1	Transistor Pnp 2907A
SM280122416	5	Trans. Jfet N MMBF4416/LC6A
SM280217505	2	Mosfet, Nchanel, 75A, 50V, D2P
SM281115003	4	P-CH Hdtmos Pwr E-Fet MTB50P03
SM289772003	5	Transistor Array 2003
SM300092390	1	Inductor Wound 2% 39 NH
SM300095151	2	Inductor Wound 150NH
SM300295082	28	Inductor 8.2 NH 5%
SM300600009	2	Inductor 9.3uH 7.2A Wound
SM301001001	19	BEAD FERRITE
SM301001002	6	Bead SHF 0.3A
SM301001016	4	Inductor Pwr Toroid 272uH .36A
SM301001017	3	Inductor Chip 10% 15uH 1210
SM301001018	1	Inductor Shielded 100uH 10%
SM301004001	70	Bead Ferrite 50 Ohms 3AMPS 120
SM311000005	1	Crystal Oscillator 16 MHz 3.3V
SM311000006	1	Voltage Controlled Oscillator 5 GHz
SM430530001	12	Relay Smd Dual Form C 5V
SM431030005	3	Relay SPDT HF 50 Ohm 4.5V

901763-00: WR 6051 500 MHz 5 GS/s 2 Ch Acquisition Board (con't)

Part Number	Qty	Description
SM433695250	2	PTC Resettable Device 2.5A
SM453005001	3	Header 1 x 5 Shrouded
SM454204040	2	Hdr Male 40 Pos Idc
SM507000002	2	Heatsink Surface Mount TO-263
SM651081102	10	Res Chip 0.1% 1 Kohm
SM652000005	10	Res RF 100 Ohm .25% 1/3W 1206
SM652041000	56	Res Zero ohms
SM652041011	18	Res Chip 1% 49.9 Ohms
SM652041200	11	Res 20 Ohms +/-1% 1/16W 0402 S
SM652061000	4	Res Chip 0 Ohm Jumper
SM652061000	11	Res Chip 0 Ohm Jumper
SM652061100	4	Res Chip 1% 10.0 Ohm .063W
SM652061100	10	Res Chip 1% 10.0 Ohm .063W
SM652061101	4	Res Chip 1% 100 Ohm .063W
SM652061101	7	Res Chip 1% 100 Ohm .063W
SM652061101	10	Res Chip 1% 100 Ohm .063W
SM652061102	5	Res Chip 1% 1.0K Ohm .063W
SM652061102	16	Res Chip 1% 1.0K Ohm .063W
SM652061102	22	Res Chip 1% 1.0K Ohm .063W
SM652061103	6	Res Chip 1% 10K Ohm .063W
SM652061103	19	Res Chip 1% 10K Ohm .063W
SM652061105	1	Res Chip 1% 1.0M Ohm .063W
SM652061105	5	Res Chip 1% 1.0M Ohm .063W
SM652061106	5	Res Chip 1% 10M Ohm .063W
SM652061112	10	Res Chip 1% 1.1K Ohm .063W
SM652061121	15	Res Chip 1% 120 Ohm .063W
SM652061121	50	Res Chip 1% 120 Ohm .063W
SM652061131	5	Res Chip 1% 130 Ohm .063W
SM652061154	5	Res Chip 1% 150K Ohm .063W
SM652061161	15	Res Chip 1% 160 Ohm .063W
SM652061200	1	Res Chip 1% 20.0 Ohm .063W
SM652061201	1	Res Chip 1% 200 Ohm .063W
SM652061201	5	Res Chip 1% 200 Ohm .063W
SM652061201	15	Res Chip 1% 200 Ohm .063W
SM652061203	11	Res Chip 1% 20K Ohm .063W
SM652061221	18	Res Chip 1% 220 Ohm .063W
SM652061222	2	Res Chip 1% 2.2K Ohm .063W
SM652061222	4	Res Chip 1% 2.2K Ohm .063W
SM652061222	5	Res Chip 1% 2.2K Ohm .063W
SM652061240	1	Res Chip 1% 24.0 Ohm .063W
SM652061240	5	Res Chip 1% 24.0 Ohm .063W
SM652061240	5	Res Chip 1% 24.0 Ohm .063W
SM652061271	2	Res Chip 1% 270 Ohm .063W
SM652061271	2	Res Chip 1% 270 Ohm .063W
SM652061271	10	Res Chip 1% 270 Ohm .063W

901763-00: WR 6051 500 MHz 5 GS/s 2 Ch Acquisition Board (con't)

Part Number	Qty	Description
SM652061271	20	Res Chip 1% 270 Ohm .063W
SM652061273	5	Res Chip 1% 27K Ohm .063W
SM652061273	20	Res Chip 1% 27K Ohm .063W
SM652061330	10	Res Chip 1% 33.0 Ohm .063W
SM652061332	4	Res Chip 1% 3.3K Ohm .063W
SM652061332	5	Res Chip 1% 3.3K Ohm .063W
SM652061334	1	Res Chip 1% 330K Ohm .063W
SM652061361	3	Res Chip 1% 360 Ohm .063W
SM652061361	5	Res Chip 1% 360 Ohm .063W
SM652061361	15	Res Chip 1% 360 Ohm .063W
SM652061390	5	Res Chip 1% 39.0 Ohm .063W
SM652061390	35	Res Chip 1% 39.0 Ohm .063W
SM652061393	1	Res Chip 1% 39K Ohm .063W
SM652061393	5	Res Chip 1% 39K Ohm .063W
SM652061393	15	Res Chip 1% 39K Ohm .063W
SM652061394	5	Res Chip 1% 390K Ohm .063W
SM652061430	5	Res Chip 1% 43.2 Ohm .063W
SM652061431	1	Res Chip 1% 430 Ohm .063W
SM652061432	6	Res Chip 1% 4.3K Ohm .063W
SM652061471	5	Res Chip 1% 470 Ohm .063W
SM652061510	5	Res Chip 1% 51.0 Ohm .063W
SM652061510	12	Res Chip 1% 51.0 Ohm .063W
SM652061510	25	Res Chip 1% 51.0 Ohm .063W
SM652061511	2	Res Chip 1% 510 Ohm .063W
SM652061512	5	Res Chip 1% 5.1K Ohm .063W
SM652061513	5	Res Chip 1% 51K Ohm .063W
SM652061562	5	Res Chip 1% 5.6K Ohm .063W
SM652061681	5	Res Chip 1% 681 Ohm .063W
SM652061751	1	Res Chip 1% 750 Ohm .063W
SM652061751	5	Res Chip 1% 750 Ohm .063W
SM652061824	5	Res Chip 1% 820K Ohm .063W
SM652061912	5	Res Chip 1% 9.1K Ohm .063W
SM652101101	2	Res Chip (E24) 1% 100 Ohm
SM652101302	1	Res Chip (E24) 1% 3 K
SM653041297	5	RES CHIP 1% 100 OHMS 0402
SM653101226	1	Res Chip 1% 18.2 Ohms
SM653101262	9	Res Chip 1% 43.2 Ohms
SM653101277	7	Res Chip 1% 61.9 Ohms
SM653101285	5	Res Chip 1 % 75.0 Ohms
SM653101297	19	Res Chip 1% 100 Ohms
SM653101322	16	Res Chip 1% 182 Ohms
SM653101326	7	Res Chip 1% 200 Ohms
SM653101334	4	Res Chip 1% 243 Ohms
SM653101347	1	Res Chip 1% 332 Ohms

901763-00: WR 6051 500 MHz 5 GS/s 2 Ch Acquisition Board (con't)

Part Number	Qty	Description
SM653101354	14	Res Chip 1% 392 Ohms
SM653101377	9	Res Chip 1% 681 Ohms
SM653101393	33	Res Chip 1% 1.00 K
SM653101397	1	Res Chip 1% 1.10 K
SM653101401	4	Res Chip 1% 1.21 K
SM653101410	11	Res Chip 1% 1.50 K
SM653101422	4	Res Chip 1% 2.00 K
SM653101422	12	Res Chip 1% 2.00 K
SM653101422	35	Res Chip 1% 2.00 K
SM653101426	9	Res Chip 1 % 2.21K
SM653101430	3	Res Chip 1% 2.43 K
SM653101435	2	Res Chip 1% 2.74 K
SM653101458	10	Res Chip 1 % 4.75 K
SM653101461	7	Res Chip 1% 5.11 K
SM653101469	1	Res Chip 1% 6.19 K
SM653101477	13	Res Chip 1% 7.50 K
SM653101489	4	Res Chip 1 % 10.0 K
SM653101489	21	Res Chip 1 % 10.0 K
SM653101506	5	Res Chip 1% 15.0 K
SM653101518	7	Res Chip 1% 20.0 K
SM653101539	6	Res Chip 1% 33.2 K
SM653101589	9	Res Chip 1% 110 K
SM654101000	11	Chip Jumper Zero Ohms
SM654101000	12	Chip Jumper Zero Ohms
SM655020002	10	RES CHIP 1% 174 OHMS
SM655020017	30	Res Thk Film 1% 1K Ohm 1/16W
SM655020025	18	Res Thk Film 1% 2.74 Ohm 1/16W
SM655030040	10	Res Thk Film +/-1% 5.11 Ohm .1W
SM655030042	5	Res Thk Film 1% 5.6M Ohm 1/16W
SM655040022	5	Res Chip .5% 50ppm 180K 150V
SM655040023	5	Res Chip .5% 50ppm 240K 150V
SM655040024	40	Res Chip .5% 50ppm 300K 150V
SM655040025	10	Res Chip .5% 50ppm 110K 150V
SM655040026	1	Res Thk Film 41.2 Ohm .5% 1/8W
SM655040027	2	Res Thk Film 20 Ohm .5% 1/8W
SM655080004	1	Res Thk Film 1 Ohm +/- 5% 1/2W
SM655080005	8	Res Thk Film 1% 105 Ohm 1/2W
SM655080009	1	Res Thk Film 0.5% 41.2 Ohm 1W
SM661010002	10	Cap Cera Chip 27PF +/- 5%
SM661028100	1	Cap Cera Chip 1UF 10V
SM661028100	15	Cap Cera Chip 1UF 10V
SM661066102	5	Cap Cera Chip 10% 1000PF/50V
SM661066102	88	Cap Cera Chip 10% 1000PF/50V
SM661068104	5	Cap Cera Chip 0.1uF 0603
SM661068104	20	Cap Cera Chip 0.1uF 0603

901763-00: WR 6051 500 MHz 5 GS/s 2 Ch Acquisition Board (con't)

Part Number	Qty	Description
SM661068104	130	Cap Cera Chip 0.1uF 0603
SM661073068	10	Cap Cera 6.8+/- 0.1PF 50V Npo
SM661073300	5	Cap Cera 30PF+/- 5% 50V Npo
SM661073331	3	Cap Cera 330PF+/- 5% 50V Npo
SM661073820	7	Cap Cera 82PF+/- 5% 50V Npo
SM661165102	3	Cap Cera Chip 1000PF
SM661207103	5	Cap Cera Chip 20% .01 UF
SM661207104	10	Cap Cera Chip 20 % .1 UF
SM661207104	222	Cap Cera Chip 20 % .1 UF
SM661207223	5	Cap Cera Chip 20% .022 UF
SM661255015	1	Cap Cera Chip 1.5 PF
SM661255121	3	Cap Cera Chip 5% 120 PF
SM661540056	15	Cap Cera Chip 5.6PF 500V
SM662131003	40	Cap Cera Chip 5% 50V .01 UF
SM662137001	14	Cap Cera +/-.1% 50V 1.5pF NPO
SM662137002	14	Cap Cera +/-.25% 50V 2.2pF NPO
SM662151001	42	Cap Cera Chip 10% 16V 0.1 UF
SM662152001	18	Cap Cera Chip 10% 16V 100nF
SM662212001	5	Cap Cera .015uF 10% 25V X7R
SM662232001	8	10000pf 0603 capacitor
SM662241001	5	Cap Cera 22pF +/- 5% 100V Npo
SM662252001	5	Cap Cera .068uF 10% 16V X7R
SM662382001	5	Cap Cera 1000pF 10% 500V X7R
SM662412001	1	Cap Cera 0.47uF 10% 25V X7R
SM662432001	1	Cap Cera 4700pF 10% 50V X7R
SM666267227	22	Cap Tant 220UF 10V 20%
SM668010335	15	Cap,tant 3.3UF/10V 20% L/Esr
SM668016226	57	Cap tant 22UF/16V 20 % L Esr
SM668025106	14	Cap,tant 10UF/25V 20% L Esr
SM668025334	10	Cap,tant .33UF/25V 20% L/Esr

7.13 901764-00: WR 6050 500 MHz 5 GS/s 4 Ch Acquisition Board

Part Number	Qty	Description
309000010	1	Crystal Oscillator 10MHZ 9PPM
335970001	1	Probe Hook
402120004	1	Conn RT Angle Fem Bnc
416162005	1	Switch R/A PCB Mtg SPDT MOM
430500003	4	20DB Attenuator Relay DC-3GHZ
454000018	1	Hdr Sold Tail Male 18 Pin HI T
454004002	1	Conn Receptacle USB R/A 4 Pos
454016002	1	Conn Hdr Vert 16 Pos Wire-BD
454022001	1	HEADER VERT 22 POS WIRE BD
454117003	4	Friction Header Straight .1 CE
454312010	4	Hdr Sold Tail/Male 10
469040002	1	Metal Banana Jack/Binding Post
505000013	2	CPU Cooler for Intel P4
520000102	1	Spacer Nylon TO-8V
522632120	6	Standoff Hex 6-32X5/8 F/F
524632015	4	Standoff Hex 6-32 X 1/2 FF
550011106	10	Screw Pan HD M2X6 Blk W/Nylock
551620100	10	#2 Flat Washer S.steel/Black O
555465002	1	Washer Lock Split 1/4
561632405	16	Screw TX Pan #6-32UNC 5/16" S1
709614300	5	Bulkhead Receptical Female Bnc
709614301	5	BNC Lock Washer
709614302	5	BNC Nut
7093XXP01	5	Right Angle Recept. Connector
7093XXP41	5	Probe Holder
7093XXP91	5	Probe Ring Contact
901140-00	4	Chip Atten. 3dB .5% Trim Res
901251-00	1	THERMAL TAPE DIE-CUT 13X13mm
901257-00	1	HEATSINK CLIP PLASTIC
901336-00	1	Heatsink S65 MST/MTB
901436-00	1	S65 Front Card Panel Assy Update
901437-00	2	Heatsink Base - HAD
901439-00	2	S65 backbone
901440-00	1	Heatsink Base mst/mtb
901441-00	1	Heatsink clip mst-mtb
901467-00	6	Thermal Gap Pad Die Cut
901562-00	1	FE Heatsink - 30mm
901586-02	1	4ch 500MHz 5GS/s PCA
901609-00	1	EMI Shield
901622-00	1	EMI shield - 10 GHZ clock
901685-00	5	Upper front end EMI shield
901686-00	5	Lower front end EMI shield
901693-00	1	Gap pad MST die cut
901694-00	1	Gap pad HTB die cut

901764-00: WR 6050 500 MHz 5 GS/s 4 Ch Acquisition Board (con't)

Part Number	Qty	Description
901709-00	5	Malico 30mm heat sink assy
901790-00	2	S65 CLOCK EMI SHIELD 0.4 IN. H
901807-00	1	ALUM. SPACER
901835-00	1	CABLE S65 10GHz MTB COAX
901835-01	1	CABLE S65 10GHz CH1 COAX
901835-02	1	CABLE S65 10GHz CH3 COAX
901836-00	1	Waverunner Acq. PCB
CH599041022	1	Heat Sink Compound 251
HAD639C-02	2	Packaged MAD440E 10GS/s SiGe
HFE653B	5	Front End Amplifier
HTB645	1	Hybrid Pkgd Timebase Trigger
MAM439	6	Monolithic 8 Megabyte Dram Mem
MST429A	1	IC Smart Trigger Gate-Array
SM158021002	10	Cap Variable 0.5-2.5pF 250V
SM158070200	10	Cap Variable 4.5-20.0 PF
SM185457102	5	Res Vari Cermet 1 K
SM185457201	1	Res Vari Cermet 200 Ohms
SM185457503	5	Res Vari Cermet 50 K
SM200180032	1	IC 2-in OR Gate 74VHC1G32
SM200588014	1	Hex Schmitt-Trig Inv 74HCT14
SM201274033	1	IC Ecl Divide BY 4 MC10EL33
SM201570016	2	IC Ecl Diff Receiver 10EL16D
SM201774025	3	Diff Ecl-Ttl Transl 10ELT25
SM202057002	1	IC Triple 2-CH Analog Mux
SM202059003	1	ECL Diff Rec/Driv w/Enable Out
SM202100004	1	IC PLL Freq Synth 4106 6 GHz
SM202102001	1	IC ECL /PECL 1:5 DIFF CLK DRVR
SM202107002	1	100EP57 4:1 MUX
SM205129160	1	IC FLASH MEM 16 MBIT HY29LV160 TSOP-48
SM205200002	1	IC 8M x 8 Bit 133MHz SDRAM
SM205616001	5	IC 8-Bit Shift Reg 74LV594ADR
SM205625616	1	IC 256K X 16 CMOS SRAM
SM205715003	2	IC PAL FG456 Fine-Pitch BGA
SM206178125	1	IC Quad Bfr Line Drvr 3 State
SM206370024	3	IC Ttl TO Diff Ecl Transl MC10
SM207010002	3	IC CMOS 8 BIT LOW RES BUS SWITCH
SM207010011	2	IC Quad 10-Bit DAC LTC1664
SM207010014	1	16 Bit Buffer/Driver 3-State
SM207131660	1	IC Dac Octal 10BIT Serial Unip
SM207231654	4	IC Dual 14-Bit Serial Dac
SM207770442	5	IC Analog Switch DG442
SM207944351	5	OCTAL ANALOG MUX/DEMUX 74HCT4351
SM208400001	3	IC MMIC Amplifier 12GHz NBB-300
SM208400002	1	IC MMIC Amplifier 8GHz NBB-400

901764-00: WR 6050 500 MHz 5 GS/s 4 Ch Acquisition Board (con't)

Part Number	Qty	Description
SM208450686	5	IC Wideband OP Amp OPA686
SM208470353	8	IC Dual OP Amp LF353
SM208470705	10	IC OP Amp Picoamp Input AD705
SM208472022	7	Opamp, Dual, Low Pwr TLE2022C
SM208475460	5	IC OP Amp Sin-Sup RtoR Ins Amp
SM208476482	2	IC Dual OP Amp Rail TO Rail 64
SM208550004	8	IC Volt Reg Pos Adjust LDO
SM208550337	1	IC Volt Reg Adj LM337
SM208550821	1	Voltage Monitor MAX821
SM208556138	1	IC Volt Ref 4.096V 0.1% 25ppm
SM208701023	11	IC Temperature Sensor
SM208909850	1	DDS-125MHZ Cmos Synth AD9850
SM227110161	1	16 BIT MICROCONTROLLER C161PI
SM229020150	5	MLC Trans Volt Suppressor
SM232022824	1	Diode Array Schottky HSMS2824
SM232030001	10	Diode Array Schottky HSMS-282C
SM232442828	5	Diode Bridge HSMS2828
SM236030099	10	Diode SO-Pkg BAV99
SM252005303	10	Pin Diode Bar 63-03W
SM252023066	20	Pin Diode Bar 66
SM252023304	5	Dual Pin Diode Silicon Bar 63-
SM256232013	1	Diode Light Emitting Red
SM270050520	15	NPN 9GHZ Wideband Transistor
SM270130092	6	Transistor Npn BFR92A
SM270330848	2	Transistor Npn BC848C
SM275030550	5	Transistor Pnp BF550
SM275132907	1	Transistor Pnp 2907A
SM280122416	5	Trans. Jfet N MMBF4416/LC6A
SM280217505	2	Mosfet, Nchanel, 75A, 50V, D2P
SM281115003	4	P-CH Hdtmos Pwr E-Fet MTB50P03
SM289772003	5	Transistor Array 2003
SM300092390	1	Inductor Wound 2% 39 NH
SM300095151	2	Inductor Wound 150NH
SM300295082	28	Inductor 8.2 NH 5%
SM300600009	2	Inductor 9.3uH 7.2A Wound
SM301001001	19	BEAD FERRITE
SM301001002	6	Bead SHF 0.3A
SM301001016	4	Inductor Pwr Toroid 272uH .36A
SM301001017	3	Inductor Chip 10% 15uH 1210
SM301001018	1	Inductor Shielded 100uH 10%
SM301004001	70	Bead Ferrite 50 Ohms 3AMPS 120
SM311000005	1	Crystal Oscillator 16 MHz 3.3V
SM311000006	1	Voltage Controlled Oscillator 5 GHz
SM430530001	20	Relay Smd Dual Form C 5V
SM431030005	5	Relay SPDT HF 50 Ohm 4.5V

901764-00: WR 6050 500 MHz 5 GS/s 4 Ch Acquisition Board (con't)

Part Number	Qty	Description
SM433695250	2	PTC Resettable Device 2.5A
SM453005001	3	Header 1 x 5 Shrouded
SM454204040	2	Hdr Male 40 Pos Idc
SM507000002	2	Heatsink Surface Mount TO-263
SM651081102	8	Res Chip 0.1% 1 Kohm
SM652000005	10	Res RF 100 Ohm .25% 1/3W 1206
SM652041000	49	Res Zero ohms
SM652041011	25	Res Chip 1% 49.9 Ohms
SM652041200	11	Res 20 Ohms +/-1% 1/16W 0402 S
SM652061000	4	Res Chip 0 Ohm Jumper
SM652061000	11	Res Chip 0 Ohm Jumper
SM652061100	5	Res Chip 1% 10.0 Ohm .063W
SM652061100	10	Res Chip 1% 10.0 Ohm .063W
SM652061101	4	Res Chip 1% 100 Ohm .063W
SM652061101	5	Res Chip 1% 100 Ohm .063W
SM652061101	7	Res Chip 1% 100 Ohm .063W
SM652061101	10	Res Chip 1% 100 Ohm .063W
SM652061102	5	Res Chip 1% 1.0K Ohm .063W
SM652061102	16	Res Chip 1% 1.0K Ohm .063W
SM652061102	23	Res Chip 1% 1.0K Ohm .063W
SM652061103	7	Res Chip 1% 10K Ohm .063W
SM652061103	19	Res Chip 1% 10K Ohm .063W
SM652061105	1	Res Chip 1% 1.0M Ohm .063W
SM652061105	5	Res Chip 1% 1.0M Ohm .063W
SM652061106	5	Res Chip 1% 10M Ohm .063W
SM652061112	10	Res Chip 1% 1.1K Ohm .063W
SM652061121	15	Res Chip 1% 120 Ohm .063W
SM652061121	50	Res Chip 1% 120 Ohm .063W
SM652061154	5	Res Chip 1% 150K Ohm .063W
SM652061161	15	Res Chip 1% 160 Ohm .063W
SM652061200	1	Res Chip 1% 20.0 Ohm .063W
SM652061201	1	Res Chip 1% 200 Ohm .063W
SM652061201	5	Res Chip 1% 200 Ohm .063W
SM652061201	15	Res Chip 1% 200 Ohm .063W
SM652061203	11	Res Chip 1% 20K Ohm .063W
SM652061221	18	Res Chip 1% 220 Ohm .063W
SM652061222	2	Res Chip 1% 2.2K Ohm .063W
SM652061222	4	Res Chip 1% 2.2K Ohm .063W
SM652061222	5	Res Chip 1% 2.2K Ohm .063W
SM652061240	1	Res Chip 1% 24.0 Ohm .063W
SM652061240	5	Res Chip 1% 24.0 Ohm .063W
SM652061271	2	Res Chip 1% 270 Ohm .063W
SM652061271	2	Res Chip 1% 270 Ohm .063W
SM652061271	10	Res Chip 1% 270 Ohm .063W

901764-00: WR 6050 500 MHz 5 GS/s 4 Ch Acquisition Board (con't)

Part Number	Qty	Description
SM652061271	20	Res Chip 1% 270 Ohm .063W
SM652061273	5	Res Chip 1% 27K Ohm .063W
SM652061273	20	Res Chip 1% 27K Ohm .063W
SM652061330	5	Res Chip 1% 33.0 Ohm .063W
SM652061332	4	Res Chip 1% 3.3K Ohm .063W
SM652061332	5	Res Chip 1% 3.3K Ohm .063W
SM652061334	1	Res Chip 1% 330K Ohm .063W
SM652061361	3	Res Chip 1% 360 Ohm .063W
SM652061361	5	Res Chip 1% 360 Ohm .063W
SM652061361	15	Res Chip 1% 360 Ohm .063W
SM652061390	5	Res Chip 1% 39.0 Ohm .063W
SM652061390	35	Res Chip 1% 39.0 Ohm .063W
SM652061393	1	Res Chip 1% 39K Ohm .063W
SM652061393	5	Res Chip 1% 39K Ohm .063W
SM652061393	15	Res Chip 1% 39K Ohm .063W
SM652061394	5	Res Chip 1% 390K Ohm .063W
SM652061430	10	Res Chip 1% 43.2 Ohm .063W
SM652061431	1	Res Chip 1% 430 Ohm .063W
SM652061432	6	Res Chip 1% 4.3K Ohm .063W
SM652061471	5	Res Chip 1% 470 Ohm .063W
SM652061510	5	Res Chip 1% 51.0 Ohm .063W
SM652061510	12	Res Chip 1% 51.0 Ohm .063W
SM652061510	25	Res Chip 1% 51.0 Ohm .063W
SM652061511	2	Res Chip 1% 510 Ohm .063W
SM652061512	5	Res Chip 1% 5.1K Ohm .063W
SM652061513	5	Res Chip 1% 51K Ohm .063W
SM652061562	5	Res Chip 1% 5.6K Ohm .063W
SM652061680	5	Res Chip 1% 68.0 Ohm .063W
SM652061681	5	Res Chip 1% 681 Ohm .063W
SM652061751	1	Res Chip 1% 750 Ohm .063W
SM652061751	5	Res Chip 1% 750 Ohm .063W
SM652061824	5	Res Chip 1% 820K Ohm .063W
SM652061912	5	Res Chip 1% 9.1K Ohm .063W
SM652101101	2	Res Chip (E24) 1% 100 Ohm
SM652101302	1	Res Chip (E24) 1% 3 K
SM653041297	5	RES CHIP 1% 100 OHMS 0402
SM653101226	1	Res Chip 1% 18.2 Ohms
SM653101262	9	Res Chip 1% 43.2 Ohms
SM653101277	7	Res Chip 1% 61.9 Ohms
SM653101285	5	Res Chip 1 % 75.0 Ohms
SM653101297	18	Res Chip 1% 100 Ohms
SM653101322	17	Res Chip 1% 182 Ohms
SM653101326	7	Res Chip 1% 200 Ohms
SM653101334	8	Res Chip 1% 243 Ohms
SM653101347	1	Res Chip 1% 332 Ohms

901764-00: WR 6050 500 MHz 5 GS/s 4 Ch Acquisition Board (con't)

Part Number	Qty	Description
SM653101354	14	Res Chip 1% 392 Ohms
SM653101377	9	Res Chip 1% 681 Ohms
SM653101393	33	Res Chip 1% 1.00 K
SM653101397	1	Res Chip 1% 1.10 K
SM653101401	4	Res Chip 1% 1.21 K
SM653101410	13	Res Chip 1% 1.50 K
SM653101422	4	Res Chip 1% 2.00 K
SM653101422	12	Res Chip 1% 2.00 K
SM653101422	35	Res Chip 1% 2.00 K
SM653101426	9	Res Chip 1 % 2.21K
SM653101430	3	Res Chip 1% 2.43 K
SM653101435	2	Res Chip 1% 2.74 K
SM653101458	10	Res Chip 1 % 4.75 K
SM653101461	7	Res Chip 1% 5.11 K
SM653101469	1	Res Chip 1% 6.19 K
SM653101477	13	Res Chip 1% 7.50 K
SM653101489	4	Res Chip 1 % 10.0 K
SM653101489	21	Res Chip 1 % 10.0 K
SM653101506	5	Res Chip 1% 15.0 K
SM653101518	7	Res Chip 1% 20.0 K
SM653101539	6	Res Chip 1% 33.2 K
SM653101589	9	Res Chip 1% 110 K
SM654101000	11	Chip Jumper Zero Ohms
SM654101000	12	Chip Jumper Zero Ohms
SM655020002	10	RES CHIP 1% 174 OHMS
SM655020017	30	Res Thk Film 1% 1K Ohm 1/16W
SM655020025	18	Res Thk Film 1% 2.74 Ohm 1/16W
SM655030040	10	Res Thk Film +/-1% 5.11 Ohm .1W
SM655030042	5	Res Thk Film 1% 5.6M Ohm 1/16W
SM655040022	5	Res Chip .5% 50ppm 180K 150V
SM655040023	5	Res Chip .5% 50ppm 240K 150V
SM655040024	40	Res Chip .5% 50ppm 300K 150V
SM655040025	10	Res Chip .5% 50ppm 110K 150V
SM655040026	1	Res Thk Film 41.2 Ohm .5% 1/8W
SM655040027	2	Res Thk Film 20 Ohm .5% 1/8W
SM655080004	5	Res Thk Film 1 Ohm +/- 5% 1/2W
SM655080005	8	Res Thk Film 1% 105 Ohm 1/2W
SM655080009	1	Res Thk Film 0.5% 41.2 Ohm 1W
SM661010002	10	Cap Cera Chip 27PF +/- 5%
SM661011001	5	Cap Cera Chip 3.9pF 200V
SM661028100	1	Cap Cera Chip 1UF 10V
SM661028100	15	Cap Cera Chip 1UF 10V
SM661066102	5	Cap Cera Chip 10% 1000PF/50V
SM661066102	10	Cap Cera Chip 10% 1000PF/50V

901764-00: WR 6050 500 MHz 5 GS/s 4 Ch Acquisition Board (con't)

Part Number	Qty	Description
SM661066102	88	Cap Cera Chip 10% 1000PF/50V
SM661068104	5	Cap Cera Chip 0.1uF 0603
SM661068104	25	Cap Cera Chip 0.1uF 0603
SM661068104	120	Cap Cera Chip 0.1uF 0603
SM661073068	5	Cap Cera 6.8+/- 0.1PF 50V Npo
SM661073300	5	Cap Cera 30PF+/- 5% 50V Npo
SM661073331	3	Cap Cera 330PF+/- 5% 50V Npo
SM661073820	7	Cap Cera 82PF+/- 5% 50V Npo
SM661165102	3	Cap Cera Chip 1000PF
SM661207103	6	Cap Cera Chip 20% .01 UF
SM661207104	10	Cap Cera Chip 20 % .1 UF
SM661207104	223	Cap Cera Chip 20 % .1 UF
SM661207223	5	Cap Cera Chip 20% .022 UF
SM661255015	1	Cap Cera Chip 1.5 PF
SM661255121	3	Cap Cera Chip 5% 120 PF
SM661540056	10	Cap Cera Chip 5.6PF 500V
SM661540068	5	Cap Cera Chip 6.8PF 500V
SM662131003	47	Cap Cera Chip 5% 50V .01 UF
SM662137001	14	Cap Cera +/-.1% 50V 1.5pF NPO
SM662137002	13	Cap Cera +/-.25% 50V 2.2pF NPO
SM662151001	42	Cap Cera Chip 10% 16V 0.1 UF
SM662152001	18	Cap Cera Chip 10% 16V 100nF
SM662212001	5	Cap Cera .015uF 10% 25V X7R
SM662232001	8	10000pf 0603 capacitor
SM662241001	5	Cap Cera 22pF +/- 5% 100V Npo
SM662252001	5	Cap Cera .068uF 10% 16V X7R
SM662382001	5	Cap Cera 1000pF 10% 500V X7R
SM662432001	1	Cap Cera 4700pF 10% 50V X7R
SM662432002	1	Cap Cera Chip 0.22uF 10% 50V
SM666267227	22	Cap Tant 220UF 10V 20%
SM668010335	15	Cap,tant 3.3UF/10V 20% L/Esr
SM668016226	58	Cap tant 22UF/16V 20 % L Esr
SM668025106	19	Cap,tant 10UF/25V 20% L Esr
SM668025334	10	Cap,tant .33UF/25V 20% L/Esr

7.14 901765-00: WR 6100 1 GHz 5 GS/s 4 Ch Acquisition Board

Part Number	Qty	Description
309000010	1	Crystal Oscillator 10MHZ 9PPM
335970001	1	Probe Hook
402120004	1	Conn RT Angle Fem Bnc
416162005	1	Switch R/A PCB Mtg SPDT MOM
430500003	4	20DB Attenuator Relay DC-3GHZ
454000018	1	Hdr Sold Tail Male 18 Pin HI T
454004002	1	Conn Receptacle USB R/A 4 Pos
454016002	1	Conn Hdr Vert 16 Pos Wire-BD
454022001	1	HEADER VERT 22 POS WIRE BD
454117003	4	Friction Header Straight .1 CE
454312010	4	Hdr Sold Tail/Male 10
469040002	1	Metal Banana Jack/Binding Post
505000013	2	CPU Cooler for Intel P4
520000102	1	Spacer Nylon TO-8V
522632120	6	Standoff Hex 6-32X5/8 F/F
524632015	4	Standoff Hex 6-32 X 1/2 FF
550011106	10	Screw Pan HD M2X6 Blk W/Nylock
551620100	10	#2 Flat Washer S.steel/Black O
555465002	1	Washer Lock Split 1/4
561632405	16	Screw TX Pan #6-32UNC 5/16" S1
709614300	5	Bulkhead Receptical Female Bnc
709614301	5	BNC Lock Washer
709614302	5	BNC Nut
7093XXP01	5	Right Angle Recept. Connector
7093XXP41	5	Probe Holder
7093XXP91	5	Probe Ring Contact
901140-00	4	Chip Atten. 3dB .5% Trim Res
901251-00	1	THERMAL TAPE DIE-CUT 13X13mm
901257-00	1	HEATSINK CLIP PLASTIC
901336-00	1	Heatsink WaveRunner MST/MTB
901436-00	1	WaveRunner Front Card Panel Assy Update
901437-00	2	Heatsink Base - HAD
901439-00	2	WaveRunner backbone
901440-00	1	Heatsink Base mst/mtb
901441-00	1	Heatsink clip mst-mtb
901467-00	6	Thermal Gap Pad Die Cut
901562-00	1	FE Heatsink - 30mm
901586-03	1	4ch 1GHz 5GS/s PCA
901609-00	1	EMI Shield
901622-00	1	EMI shield - 10 GHZ clock
901685-00	5	Upper front end EMI shield
901686-00	5	Lower front end EMI shield
901693-00	1	Gap pad MST die cut

901765-00: WR 6100 1 GHz 5 GS/s 4 Ch Acquisition Board (con't)

Part Number	Qty	Description
901694-00	1	Gap pad HTB die cut
901709-00	5	Malico 30mm heat sink assy
901790-00	2	WaveRunner CLOCK EMI SHIELD 0.4 IN. H
901807-00	1	ALUM. SPACER
901835-00	1	CABLE WaveRunner 10GHz MTB COAX
901835-01	1	CABLE WaveRunner 10GHz CH1 COAX
901835-02	1	CABLE WaveRunner 10GHz CH3 COAX
901836-00	1	Waverunner Acq. PCB
CH599041022	1	Heat Sink Compound 251
HAD639C-02	2	Packaged MAD440E 10GS/s SiGe
HFE653B	5	Front End Amplifier
HTB645	1	Hybrid Pkgd Timebase Trigger
MAD440E	1	Monolithic 10GS/s SiGe 9bit AD
MAM439	6	Monolithic 8 Megabyte Dram Mem
MFE652B	1	Monolithic front-end amplifier
MST429A	1	IC Smart Trigger Gate-Array
SM158021002	10	Cap Variable 0.5-2.5pF 250V
SM158070200	10	Cap Variable 4.5-20.0 PF
SM185457102	5	Res Vari Cermet 1 K
SM185457201	1	Res Vari Cermet 200 Ohms
SM185457503	5	Res Vari Cermet 50 K
SM191260100	4	RES/Cap Network 10 Ohm 100 PF
SM200180032	1	IC 2-in OR Gate 74VHC1G32
SM200588014	1	Hex Schmitt-Trig Inv 74HCT14
SM201274033	1	IC Ecl Divide BY 4 MC10EL33
SM201570016	2	IC Ecl Diff Receiver 10EL16D
SM201774025	3	Diff Ecl-Ttl Transl 10ELT25
SM202057002	1	IC Triple 2-CH Analog Mux
SM202059003	1	ECL Diff Rec/Driv w/Enable Out
SM202100004	1	IC PLL Freq Synth 4106 6 GHz
SM202102001	1	IC ECL /PECL 1:5 DIFF CLK DRVR
SM202107002	1	100EP57 4:1 MUX
SM205129160	1	IC FLASH MEM 16 MBIT HY29LV160 TSOP-48
SM205200002	1	IC 8M x 8 Bit 133MHz SDRAM
SM205616001	5	IC 8-Bit Shift Reg 74LV594ADR
SM205625616	1	IC 256K X 16 CMOS SRAM
SM205715003	2	IC PAL FG456 Fine-Pitch BGA
SM206178125	1	IC Quad Bfr Line Drvr 3 State
SM206370024	3	IC Ttl TO Diff Ecl Transl MC10
SM207010002	3	IC CMOS 8 BIT LOW RES BUS SWITCH
SM207010011	2	IC Quad 10-Bit DAC LTC1664
SM207010014	1	16 Bit Buffer/Driver 3-State
SM207131660	1	IC Dac Octal 10BIT Serial Unip
SM207231654	4	IC Dual 14-Bit Serial Dac
SM207770442	5	IC Analog Switch DG442

901765-00: WR 6100 1 GHz 5 GS/s 4 Ch Acquisition Board (con't)

Part Number	Qty	Description
SM207944351	5	OCTAL ANALOG MUX/DEMUX 74HCT4351
SM208400001	3	IC MMIC Amplifier 12GHz NBB-300
SM208400002	1	IC MMIC Amplifier 8GHz NBB-400
SM208450686	5	IC Wideband OP Amp OPA686
SM208470353	8	IC Dual OP Amp LF353
SM208470705	10	IC OP Amp Picoamp Input AD705
SM208472022	7	Opamp, Dual, Low Pwr TLE2022C
SM208475460	5	IC OP Amp Sin-Sup RtoR Ins Amp
SM208476482	2	IC Dual OP Amp Rail TO Rail 64
SM208550004	8	IC Volt Reg Pos Adjust LDO
SM208550337	1	IC Volt Reg Adj LM337
SM208550821	1	Voltage Monitor MAX821
SM208556138	1	IC Volt Ref 4.096V 0.1% 25ppm
SM208701023	11	IC Temperature Sensor
SM208909850	1	DDS-125MHZ Cmos Synth AD9850
SM227110161	1	16 BIT MICROCONTROLLER C161PI
SM229020150	5	MLC Trans Volt Suppressor
SM232022824	1	Diode Array Schottky HSMS2824
SM232030001	10	Diode Array Schottky HSMS-282C
SM232442828	5	Diode Bridge HSMS2828
SM236030099	10	Diode SO-Pkg BAV99
SM252005303	10	Pin Diode Bar 63-03W
SM252023066	20	Pin Diode Bar 66
SM252023304	5	Dual Pin Diode Silicon Bar 63-
SM256232013	1	Diode Light Emitting Red
SM270050520	15	NPN 9GHZ Wideband Transistor
SM270130092	6	Transistor Npn BFR92A
SM270330848	2	Transistor Npn BC848C
SM275030550	5	Transistor Pnp BF550
SM275132907	1	Transistor Pnp 2907A
SM280122416	5	Trans. Jfet N MMBF4416/LC6A
SM280217505	2	Mosfet, Nchanel, 75A, 50V, D2P
SM281115003	4	P-CH Hdtmos Pwr E-Fet MTB50P03
SM289772003	5	Transistor Array 2003
SM300092390	1	Inductor Wound 2% 39 NH
SM300095151	2	Inductor Wound 150NH
SM300295082	28	Inductor 8.2 NH 5%
SM300600009	2	Inductor 9.3uH 7.2A Wound
SM301001001	19	BEAD FERRITE
SM301001002	6	Bead SHF 0.3A
SM301001016	4	Inductor Pwr Toroid 272uH .36A
SM301001017	3	Inductor Chip 10% 15uH 1210
SM301001018	1	Inductor Shielded 100uH 10%
SM301004001	70	Bead Ferrite 50 Ohms 3AMPS 120

901765-00: WR 6100 1 GHz 5 GS/s 4 Ch Acquisition Board (con't)

Part Number	Qty	Description
SM311000005	1	Crystal Oscillator 16 MHz 3.3V
SM311000006	1	Voltage Controlled Oscillator 5 GHz
SM430530001	20	Relay Smd Dual Form C 5V
SM431030005	5	Relay SPDT HF 50 Ohm 4.5V
SM433695250	2	PTC Resettable Device 2.5A
SM453005001	3	Header 1 x 5 Shrouded
SM454204040	2	Hdr Male 40 Pos Idc
SM507000002	2	Heatsink Surface Mount TO-263
SM651081102	8	Res Chip 0.1% 1 Kohm
SM652000005	10	Res RF 100 Ohm .25% 1/3W 1206
SM652041000	49	Res Zero ohms
SM652041011	25	Res Chip 1% 49.9 Ohms
SM652041200	11	Res 20 Ohms +/-1% 1/16W 0402 S
SM652061000	4	Res Chip 0 Ohm Jumper
SM652061000	11	Res Chip 0 Ohm Jumper
SM652061100	5	Res Chip 1% 10.0 Ohm .063W
SM652061100	10	Res Chip 1% 10.0 Ohm .063W
SM652061101	10	Res Chip 1% 100 Ohm .063W
SM652061101	7	Res Chip 1% 100 Ohm .063W
SM652061101	4	Res Chip 1% 100 Ohm .063W
SM652061101	5	Res Chip 1% 100 Ohm .063W
SM652061102	5	Res Chip 1% 1.0K Ohm .063W
SM652061102	16	Res Chip 1% 1.0K Ohm .063W
SM652061102	23	Res Chip 1% 1.0K Ohm .063W
SM652061103	7	Res Chip 1% 10K Ohm .063W
SM652061103	19	Res Chip 1% 10K Ohm .063W
SM652061105	1	Res Chip 1% 1.0M Ohm .063W
SM652061105	5	Res Chip 1% 1.0M Ohm .063W
SM652061106	5	Res Chip 1% 10M Ohm .063W
SM652061112	10	Res Chip 1% 1.1K Ohm .063W
SM652061121	15	Res Chip 1% 120 Ohm .063W
SM652061121	50	Res Chip 1% 120 Ohm .063W
SM652061131	5	Res Chip 1% 130 Ohm .063W
SM652061154	5	Res Chip 1% 150K Ohm .063W
SM652061161	15	Res Chip 1% 160 Ohm .063W
SM652061200	1	Res Chip 1% 20.0 Ohm .063W
SM652061201	5	Res Chip 1% 200 Ohm .063W
SM652061201	1	Res Chip 1% 200 Ohm .063W
SM652061201	15	Res Chip 1% 200 Ohm .063W
SM652061203	11	Res Chip 1% 20K Ohm .063W
SM652061221	18	Res Chip 1% 220 Ohm .063W
SM652061222	2	Res Chip 1% 2.2K Ohm .063W
SM652061222	4	Res Chip 1% 2.2K Ohm .063W
SM652061222	5	Res Chip 1% 2.2K Ohm .063W
SM652061240	1	Res Chip 1% 24.0 Ohm .063W

901765-00: WR 6100 1 GHz 5 GS/s 4 Ch Acquisition Board (con't)

Part Number	Qty	Description
SM652061240	5	Res Chip 1% 24.0 Ohm .063W
SM652061271	2	Res Chip 1% 270 Ohm .063W
SM652061271	2	Res Chip 1% 270 Ohm .063W
SM652061271	20	Res Chip 1% 270 Ohm .063W
SM652061271	10	Res Chip 1% 270 Ohm .063W
SM652061273	5	Res Chip 1% 27K Ohm .063W
SM652061273	20	Res Chip 1% 27K Ohm .063W
SM652061330	5	Res Chip 1% 33.0 Ohm .063W
SM652061332	5	Res Chip 1% 3.3K Ohm .063W
SM652061332	4	Res Chip 1% 3.3K Ohm .063W
SM652061334	1	Res Chip 1% 330K Ohm .063W
SM652061361	15	Res Chip 1% 360 Ohm .063W
SM652061361	5	Res Chip 1% 360 Ohm .063W
SM652061361	3	Res Chip 1% 360 Ohm .063W
SM652061390	35	Res Chip 1% 39.0 Ohm .063W
SM652061390	5	Res Chip 1% 39.0 Ohm .063W
SM652061393	5	Res Chip 1% 39K Ohm .063W
SM652061393	1	Res Chip 1% 39K Ohm .063W
SM652061393	15	Res Chip 1% 39K Ohm .063W
SM652061394	5	Res Chip 1% 390K Ohm .063W
SM652061430	10	Res Chip 1% 43.2 Ohm .063W
SM652061431	1	Res Chip 1% 430 Ohm .063W
SM652061432	6	Res Chip 1% 4.3K Ohm .063W
SM652061471	5	Res Chip 1% 470 Ohm .063W
SM652061510	12	Res Chip 1% 51.0 Ohm .063W
SM652061510	5	Res Chip 1% 51.0 Ohm .063W
SM652061510	25	Res Chip 1% 51.0 Ohm .063W
SM652061511	2	Res Chip 1% 510 Ohm .063W
SM652061512	5	Res Chip 1% 5.1K Ohm .063W
SM652061513	5	Res Chip 1% 51K Ohm .063W
SM652061562	5	Res Chip 1% 5.6K Ohm .063W
SM652061681	5	Res Chip 1% 681 Ohm .063W
SM652061751	5	Res Chip 1% 750 Ohm .063W
SM652061751	1	Res Chip 1% 750 Ohm .063W
SM652061824	5	Res Chip 1% 820K Ohm .063W
SM652061912	5	Res Chip 1% 9.1K Ohm .063W
SM652101101	2	Res Chip (E24) 1% 100 Ohm
SM652101302	1	Res Chip (E24) 1% 3 K
SM653001050	6	Res Chip 50OHM .2W +/-1%
SM653041297	5	RES CHIP 1% 100 OHMS 0402
SM653101226	1	Res Chip 1% 18.2 Ohms
SM653101262	9	Res Chip 1% 43.2 Ohms
SM653101277	7	Res Chip 1% 61.9 Ohms
SM653101285	5	Res Chip 1 % 75.0 Ohms

901765-00: WR 6100 1 GHz 5 GS/s 4 Ch Acquisition Board (con't)

Part Number	Qty	Description
SM653101297	18	Res Chip 1% 100 Ohms
SM653101322	17	Res Chip 1% 182 Ohms
SM653101326	7	Res Chip 1% 200 Ohms
SM653101334	8	Res Chip 1% 243 Ohms
SM653101347	1	Res Chip 1% 332 Ohms
SM653101354	14	Res Chip 1% 392 Ohms
SM653101377	9	Res Chip 1% 681 Ohms
SM653101393	33	Res Chip 1% 1.00 K
SM653101397	1	Res Chip 1% 1.10 K
SM653101401	4	Res Chip 1% 1.21 K
SM653101410	13	Res Chip 1% 1.50 K
SM653101422	35	Res Chip 1% 2.00 K
SM653101422	4	Res Chip 1% 2.00 K
SM653101422	12	Res Chip 1% 2.00 K
SM653101426	9	Res Chip 1 % 2.21K
SM653101430	3	Res Chip 1% 2.43 K
SM653101435	2	Res Chip 1% 2.74 K
SM653101458	10	Res Chip 1 % 4.75 K
SM653101461	7	Res Chip 1% 5.11 K
SM653101469	1	Res Chip 1% 6.19 K
SM653101477	13	Res Chip 1% 7.50 K
SM653101489	21	Res Chip 1 % 10.0 K
SM653101489	4	Res Chip 1 % 10.0 K
SM653101506	5	Res Chip 1% 15.0 K
SM653101518	7	Res Chip 1% 20.0 K
SM653101539	6	Res Chip 1% 33.2 K
SM653101589	9	Res Chip 1% 110 K
SM654101000	11	Chip Jumper Zero Ohms
SM654101000	12	Chip Jumper Zero Ohms
SM655020002	10	RES CHIP 1% 174 OHMS
SM655020017	30	Res Thk Film 1% 1K Ohm 1/16W
SM655020025	18	Res Thk Film 1% 2.74 Ohm 1/16W
SM655030040	10	Res Thk Film +/-1% 5.11 Ohm .1W
SM655030042	5	Res Thk Film 1% 5.6M Ohm 1/16W
SM655040022	5	Res Chip .5% 50ppm 180K 150V
SM655040023	5	Res Chip .5% 50ppm 240K 150V
SM655040024	40	Res Chip .5% 50ppm 300K 150V
SM655040025	10	Res Chip .5% 50ppm 110K 150V
SM655040026	1	Res Thk Film 41.2 Ohm .5% 1/8W
SM655040027	2	Res Thk Film 20 Ohm .5% 1/8W
SM655080004	5	Res Thk Film 1 Ohm +/- 5% 1/2W
SM655080005	8	Res Thk Film 1% 105 Ohm 1/2W
SM655080009	1	Res Thk Film 0.5% 41.2 Ohm 1W
SM661010002	10	Cap Cera Chip 27PF +/- 5%
SM661011001	5	Cap Cera Chip 3.9pF 200V

901765-00: WR 6100 1 GHz 5 GS/s 4 Ch Acquisition Board (con't)

Part Number	Qty	Description
SM661028100	15	Cap Cera Chip 1UF 10V
SM661028100	1	Cap Cera Chip 1UF 10V
SM661066102	5	Cap Cera Chip 10% 1000PF/50V
SM661066102	88	Cap Cera Chip 10% 1000PF/50V
SM661066102	10	Cap Cera Chip 10% 1000PF/50V
SM661068104	25	Cap Cera Chip 0.1uF 0603
SM661068104	120	Cap Cera Chip 0.1uF 0603
SM661068104	5	Cap Cera Chip 0.1uF 0603
SM661073068	5	Cap Cera 6.8+/- 0.1PF 50V Npo
SM661073300	5	Cap Cera 30PF+/- 5% 50V Npo
SM661073331	3	Cap Cera 330PF+/- 5% 50V Npo
SM661073820	7	Cap Cera 82PF+/- 5% 50V Npo
SM661165102	3	Cap Cera Chip 1000PF
SM661207103	6	Cap Cera Chip 20% .01 UF
SM661207104	10	Cap Cera Chip 20 % .1 UF
SM661207104	223	Cap Cera Chip 20 % .1 UF
SM661207223	5	Cap Cera Chip 20% .022 UF
SM661255015	1	Cap Cera Chip 1.5 PF
SM661255121	3	Cap Cera Chip 5% 120 PF
SM661540056	10	Cap Cera Chip 5.6PF 500V
SM661540068	5	Cap Cera Chip 6.8PF 500V
SM662131003	47	Cap Cera Chip 5% 50V .01 UF
SM662137001	14	Cap Cera +/-.1% 50V 1.5pF NPO
SM662151001	42	Cap Cera Chip 10% 16V 0.1 UF
SM662152001	18	Cap Cera Chip 10% 16V 100nF
SM662212001	5	Cap Cera .015uF 10% 25V X7R
SM662232001	8	10000pf 0603 capacitor
SM662241001	5	Cap Cera 22pF +/- 5% 100V Npo
SM662252001	5	Cap Cera .068uF 10% 16V X7R
SM662382001	5	Cap Cera 1000pF 10% 500V X7R
SM662432001	1	Cap Cera 4700pF 10% 50V X7R
SM662432002	1	Cap Cera Chip 0.22uF 10% 50V
SM666267227	22	Cap Tant 220UF 10V 20%
SM668010335	15	Cap,tant 3.3UF/10V 20% L/Esr
SM668016226	58	Cap tant 22UF/16V 20 % L Esr
SM668025106	19	Cap,tant 10UF/25V 20% L Esr
SM668025334	10	Cap,tant .33UF/25V 20% L/Esr

7.15 901768-00: Accessories

Part Number	Qty	Description
771000001	1	Optical Wheel Mouse
901335-00	1	End User License Agreement
901477-00	1	LeCroy Blue Cal Void Sticker
901779-00	1	WaveRunner shipping cover
901799-00	1	Protective Cover Logo Label
901891-00	1	WR6xxx CECERT
901926-00	1	CD and Case XStream DSO App SW
CALIB-DE1	1	Calibration Document Envelope
PP007-2	2	PP007 Passive Probe x2

7.16 901806-00: WR 6030 350 MHz 2.5 GS/s 4 Ch Acquisition Board

Part Number	Qty	Description
309000010	1	Crystal Oscillator 10MHZ 9PPM
335970001	1	Probe Hook
402120004	1	Conn RT Angle Fem Bnc
416162005	1	Switch R/A PCB Mtg SPDT MOM
430500003	4	20DB Attenuator Relay DC-3GHZ
454000018	1	Hdr Sold Tail Male 18 Pin HI T
454004002	1	Conn Receptacle USB R/A 4 Pos
454016002	1	Conn Hdr Vert 16 Pos Wire-BD
454022001	1	HEADER VERT 22 POS WIRE BD
454117003	4	Friction Header Straight .1 CE
454312010	4	Hdr Sold Tail/Male 10
469040002	1	Metal Banana Jack/Binding Post
505000013	2	CPU Cooler for Intel P4
520000102	1	Spacer Nylon TO-8V
522632120	6	Standoff Hex 6-32X5/8 F/F
524632015	4	Standoff Hex 6-32 X 1/2 FF
550011106	10	Screw Pan HD M2X6 Blk W/Nylock
551620100	10	#2 Flat Washer S.steel/Black O
555465002	1	Washer Lock Split 1/4
561632405	16	Screw TX Pan #6-32UNC 5/16" S1
709614300	5	Bulkhead Receptical Female Bnc
709614301	5	BNC Lock Washer
709614302	5	BNC Nut
7093XXP01	5	Right Angle Recept. Connector
7093XXP41	5	Probe Holder
7093XXP91	5	Probe Ring Contact
901140-00	4	Chip Atten. 3dB .5% Trim Res
901251-00	1	THERMAL TAPE DIE-CUT 13X13mm
901257-00	1	HEATSINK CLIP PLASTIC
901336-00	1	Heatsink S65 MST/MTB
901436-00	1	S65 Front Card Panel Assy Update

901806-00: WR 6030 350 MHz 2.5 GS/s 4 Ch Acquisition Board (con't)

Part Number	Qty	Description
901437-00	2	Heatsink Base - HAD
901439-00	2	S65 backbone
901440-00	1	Heatsink Base mst/mtb
901441-00	1	Heatsink clip mst-mtb
901467-00	6	Thermal Gap Pad Die Cut
901562-00	1	FE Heatsink - 30mm
901586-02	1	4ch 500MHz 5GS/s PCA
901609-00	1	EMI Shield
901622-00	1	EMI shield - 10 GHZ clock
901685-00	5	Upper front end EMI shield
901686-00	5	Lower front end EMI shield
901693-00	1	Gap pad MST die cut
901694-00	1	Gap pad HTB die cut
901709-00	5	Malico 30mm heat sink assy
901790-00	2	S65 CLOCK EMI SHIELD 0.4 IN. H
901807-00	1	ALUM. SPACER
901835-00	1	CABLE S65 10GHz MTB COAX
901835-01	1	CABLE S65 10GHz CH1 COAX
901835-02	1	CABLE S65 10GHz CH3 COAX
901836-00	1	Waverunner Acq. PCB
CH599041022	1	Heat Sink Compound 251
HAD639C-02	2	Packaged MAD440E 10GS/s SiGe
HFE653B	5	Front End Amplifier
HTB645	1	Hybrid Pkgd Timebase Trigger
MAM439	6	Monolithic 8 Megabyte Dram Mem
MST429A	1	IC Smart Trigger Gate-Array
SM158021002	10	Cap Variable 0.5-2.5pF 250V
SM158070200	10	Cap Variable 4.5-20.0 PF
SM185457102	5	Res Vari Cermet 1 K
SM185457201	1	Res Vari Cermet 200 Ohms
SM185457503	5	Res Vari Cermet 50 K
SM200180032	1	IC 2-in OR Gate 74VHC1G32
SM200588014	1	Hex Schmitt-Trig Inv 74HCT14
SM201274033	1	IC Ecl Divide BY 4 MC10EL33
SM201570016	2	IC Ecl Diff Receiver 10EL16D
SM201774025	3	Diff Ecl-Ttl Transl 10ELT25
SM202057002	1	IC Triple 2-CH Analog Mux
SM202059003	1	ECL Diff Rec/Driv w/Enable Out
SM202100004	1	IC PLL Freq Synth 4106 6 GHz
SM202102001	1	IC ECL /PECL 1:5 DIFF CLK DRVR
SM202107002	1	100EP57 4:1 MUX
SM205129160	1	IC FLASH MEM 16 MBIT HY29LV160 TSOP-48
SM205200002	1	IC 8M x 8 Bit 133MHz SDRAM
SM205616001	5	IC 8-Bit Shift Reg 74LV594ADR

901806-00: WR 6030 350 MHz 2.5 GS/s 4 Ch Acquisition Board (con't)

Part Number	Qty	Description
SM205625616	1	IC 256K X 16 CMOS SRAM
SM205715003	2	IC PAL FG456 Fine-Pitch BGA
SM206178125	1	IC Quad Bfr Line Drvr 3 State
SM206370024	3	IC Ttl TO Diff Ecl Transl MC10
SM207010002	3	IC CMOS 8 BIT LOW RES BUS SWITCH
SM207010011	2	IC Quad 10-Bit DAC LTC1664
SM207010014	1	16 Bit Buffer/Driver 3-State
SM207131660	1	IC Dac Octal 10BIT Serial Unip
SM207231654	4	IC Dual 14-Bit Serial Dac
SM207770442	5	IC Analog Switch DG442
SM207944351	5	OCTAL ANALOG MUX/DEMUX 74HCT4351
SM208400001	3	IC MMIC Amplifier 12GHz NBB-300
SM208400002	1	IC MMIC Amplifier 8GHz NBB-400
SM208450686	5	IC Wideband OP Amp OPA686
SM208470353	8	IC Dual OP Amp LF353
SM208470705	10	IC OP Amp Picoamp Input AD705
SM208472022	7	Opamp, Dual, Low Pwr TLE2022C
SM208475460	5	IC OP Amp Sin-Sup RtoR Ins Amp
SM208476482	2	IC Dual OP Amp Rail TO Rail 64
SM208550004	8	IC Volt Reg Pos Adjust LDO
SM208550337	1	IC Volt Reg Adj LM337
SM208550821	1	Voltage Monitor MAX821
SM208556138	1	IC Volt Ref 4.096V 0.1% 25ppm
SM208701023	11	IC Temperature Sensor
SM208909850	1	DDS-125MHZ Cmos Synth AD9850
SM227110161	1	16 BIT MICROCONTROLLER C161PI
SM229020150	5	MLC Trans Volt Suppressor
SM232022824	1	Diode Array Schottky HSMS2824
SM232030001	10	Diode Array Schottky HSMS-282C
SM232442828	5	Diode Bridge HSMS2828
SM236030099	10	Diode SO-Pkg BAV99
SM252005303	10	Pin Diode Bar 63-03W
SM252023066	20	Pin Diode Bar 66
SM252023304	5	Dual Pin Diode Silicon Bar 63-
SM256232013	1	Diode Light Emitting Red
SM270050520	15	NPN 9GHZ Wideband Transistor
SM270130092	6	Transistor Npn BFR92A
SM270330848	2	Transistor Npn BC848C
SM275030550	5	Transistor Pnp BF550
SM275132907	1	Transistor Pnp 2907A
SM280122416	5	Trans. Jfet N MMBF4416/LC6A
SM280217505	2	Mosfet, Nchanel, 75A, 50V, D2P
SM281115003	4	P-CH Hdtmos Pwr E-Fet MTB50P03
SM289772003	5	Transistor Array 2003
SM300092390	1	Inductor Wound 2% 39 NH

901806-00: WR 6030 350 MHz 2.5 GS/s 4 Ch Acquisition Board (con't)

Part Number	Qty	Description
SM300095151	2	Inductor Wound 150NH
SM300295082	28	Inductor 8.2 NH 5%
SM300600009	2	Inductor 9.3uH 7.2A Wound
SM301001001	19	BEAD FERRITE
SM301001002	6	Bead SHF 0.3A
SM301001016	4	Inductor Pwr Toroid 272uH .36A
SM301001017	3	Inductor Chip 10% 15uH 1210
SM301001018	1	Inductor Shielded 100uH 10%
SM301004001	70	Bead Ferrite 50 Ohms 3AMPS 120
SM311000005	1	Crystal Oscillator 16 MHz 3.3V
SM311000006	1	Voltage Controlled Oscillator 5 GHz
SM430530001	20	Relay Smd Dual Form C 5V
SM431030005	5	Relay SPDT HF 50 Ohm 4.5V
SM433695250	2	PTC Resettable Device 2.5A
SM453005001	3	Header 1 x 5 Shrouded
SM454204040	2	Hdr Male 40 Pos Idc
SM507000002	2	Heatsink Surface Mount TO-263
SM651081102	8	Res Chip 0.1% 1 Kohm
SM652000005	10	Res RF 100 Ohm .25% 1/3W 1206
SM652041000	49	Res Zero ohms
SM652041011	25	Res Chip 1% 49.9 Ohms
SM652041200	11	Res 20 Ohms +/-1% 1/16W 0402 S
SM652061000	4	Res Chip 0 Ohm Jumper
SM652061000	11	Res Chip 0 Ohm Jumper
SM652061100	5	Res Chip 1% 10.0 Ohm .063W
SM652061100	10	Res Chip 1% 10.0 Ohm .063W
SM652061101	4	Res Chip 1% 100 Ohm .063W
SM652061101	5	Res Chip 1% 100 Ohm .063W
SM652061101	7	Res Chip 1% 100 Ohm .063W
SM652061101	10	Res Chip 1% 100 Ohm .063W
SM652061102	5	Res Chip 1% 1.0K Ohm .063W
SM652061102	16	Res Chip 1% 1.0K Ohm .063W
SM652061102	23	Res Chip 1% 1.0K Ohm .063W
SM652061103	7	Res Chip 1% 10K Ohm .063W
SM652061103	19	Res Chip 1% 10K Ohm .063W
SM652061105	1	Res Chip 1% 1.0M Ohm .063W
SM652061105	5	Res Chip 1% 1.0M Ohm .063W
SM652061106	5	Res Chip 1% 10M Ohm .063W
SM652061112	10	Res Chip 1% 1.1K Ohm .063W
SM652061121	15	Res Chip 1% 120 Ohm .063W
SM652061121	50	Res Chip 1% 120 Ohm .063W
SM652061154	5	Res Chip 1% 150K Ohm .063W
SM652061161	15	Res Chip 1% 160 Ohm .063W
SM652061200	1	Res Chip 1% 20.0 Ohm .063W

901806-00: WR 6030 350 MHz 2.5 GS/s 4 Ch Acquisition Board (con't)

Part Number	Qty	Description
SM652061201	1	Res Chip 1% 200 Ohm .063W
SM652061201	5	Res Chip 1% 200 Ohm .063W
SM652061201	15	Res Chip 1% 200 Ohm .063W
SM652061203	11	Res Chip 1% 20K Ohm .063W
SM652061221	18	Res Chip 1% 220 Ohm .063W
SM652061222	2	Res Chip 1% 2.2K Ohm .063W
SM652061222	4	Res Chip 1% 2.2K Ohm .063W
SM652061222	5	Res Chip 1% 2.2K Ohm .063W
SM652061240	1	Res Chip 1% 24.0 Ohm .063W
SM652061240	5	Res Chip 1% 24.0 Ohm .063W
SM652061271	2	Res Chip 1% 270 Ohm .063W
SM652061271	2	Res Chip 1% 270 Ohm .063W
SM652061271	10	Res Chip 1% 270 Ohm .063W
SM652061271	20	Res Chip 1% 270 Ohm .063W
SM652061273	5	Res Chip 1% 27K Ohm .063W
SM652061273	20	Res Chip 1% 27K Ohm .063W
SM652061330	5	Res Chip 1% 33.0 Ohm .063W
SM652061332	4	Res Chip 1% 3.3K Ohm .063W
SM652061332	5	Res Chip 1% 3.3K Ohm .063W
SM652061334	1	Res Chip 1% 330K Ohm .063W
SM652061361	3	Res Chip 1% 360 Ohm .063W
SM652061361	5	Res Chip 1% 360 Ohm .063W
SM652061361	15	Res Chip 1% 360 Ohm .063W
SM652061390	5	Res Chip 1% 39.0 Ohm .063W
SM652061390	35	Res Chip 1% 39.0 Ohm .063W
SM652061393	1	Res Chip 1% 39K Ohm .063W
SM652061393	5	Res Chip 1% 39K Ohm .063W
SM652061393	15	Res Chip 1% 39K Ohm .063W
SM652061394	5	Res Chip 1% 390K Ohm .063W
SM652061430	10	Res Chip 1% 43.2 Ohm .063W
SM652061431	1	Res Chip 1% 430 Ohm .063W
SM652061432	6	Res Chip 1% 4.3K Ohm .063W
SM652061471	5	Res Chip 1% 470 Ohm .063W
SM652061510	5	Res Chip 1% 51.0 Ohm .063W
SM652061510	12	Res Chip 1% 51.0 Ohm .063W
SM652061510	25	Res Chip 1% 51.0 Ohm .063W
SM652061511	2	Res Chip 1% 510 Ohm .063W
SM652061512	5	Res Chip 1% 5.1K Ohm .063W
SM652061513	5	Res Chip 1% 51K Ohm .063W
SM652061562	5	Res Chip 1% 5.6K Ohm .063W
SM652061680	5	Res Chip 1% 68.0 Ohm .063W
SM652061681	5	Res Chip 1% 681 Ohm .063W
SM652061751	1	Res Chip 1% 750 Ohm .063W
SM652061751	5	Res Chip 1% 750 Ohm .063W
SM652061824	5	Res Chip 1% 820K Ohm .063W

901806-00: WR 6030 350 MHz 2.5 GS/s 4 Ch Acquisition Board (con't)

Part Number	Qty	Description
SM652061912	5	Res Chip 1% 9.1K Ohm .063W
SM652101101	2	Res Chip (E24) 1% 100 Ohm
SM652101302	1	Res Chip (E24) 1% 3 K
SM653041297	5	RES CHIP 1% 100 OHMS 0402
SM653101226	1	Res Chip 1% 18.2 Ohms
SM653101262	9	Res Chip 1% 43.2 Ohms
SM653101277	7	Res Chip 1% 61.9 Ohms
SM653101285	5	Res Chip 1 % 75.0 Ohms
SM653101297	18	Res Chip 1% 100 Ohms
SM653101322	17	Res Chip 1% 182 Ohms
SM653101326	7	Res Chip 1% 200 Ohms
SM653101334	8	Res Chip 1% 243 Ohms
SM653101347	1	Res Chip 1% 332 Ohms
SM653101354	14	Res Chip 1% 392 Ohms
SM653101377	9	Res Chip 1% 681 Ohms
SM653101393	33	Res Chip 1% 1.00 K
SM653101397	1	Res Chip 1% 1.10 K
SM653101401	4	Res Chip 1% 1.21 K
SM653101410	13	Res Chip 1% 1.50 K
SM653101422	4	Res Chip 1% 2.00 K
SM653101422	12	Res Chip 1% 2.00 K
SM653101422	35	Res Chip 1% 2.00 K
SM653101426	9	Res Chip 1 % 2.21K
SM653101430	3	Res Chip 1% 2.43 K
SM653101435	2	Res Chip 1% 2.74 K
SM653101458	10	Res Chip 1 % 4.75 K
SM653101461	7	Res Chip 1% 5.11 K
SM653101469	1	Res Chip 1% 6.19 K
SM653101477	13	Res Chip 1% 7.50 K
SM653101489	4	Res Chip 1 % 10.0 K
SM653101489	21	Res Chip 1 % 10.0 K
SM653101506	5	Res Chip 1% 15.0 K
SM653101518	7	Res Chip 1% 20.0 K
SM653101539	6	Res Chip 1% 33.2 K
SM653101589	9	Res Chip 1% 110 K
SM654101000	11	Chip Jumper Zero Ohms
SM654101000	12	Chip Jumper Zero Ohms
SM655020002	10	RES CHIP 1% 174 OHMS
SM655020017	30	Res Thk Film 1% 1K Ohm 1/16W
SM655020025	18	Res Thk Film 1% 2.74 Ohm 1/16W
SM655030040	10	Res Thk Film +/-1% 5.11 Ohm .1W
SM655030042	5	Res Thk Film 1% 5.6M Ohm 1/16W
SM655040022	5	Res Chip .5% 50ppm 180K 150V
SM655040023	5	Res Chip .5% 50ppm 240K 150V

901806-00: WR 6030 350 MHz 2.5 GS/s 4 Ch Acquisition Board (con't)

Part Number	Qty	Description
SM655040024	40	Res Chip .5% 50ppm 300K 150V
SM655040025	10	Res Chip .5% 50ppm 110K 150V
SM655040026	1	Res Thk Film 41.2 Ohm .5% 1/8W
SM655040027	2	Res Thk Film 20 Ohm .5% 1/8W
SM655080004	5	Res Thk Film 1 Ohm +/- 5% 1/2W
SM655080005	8	Res Thk Film 1% 105 Ohm 1/2W
SM655080009	1	Res Thk Film 0.5% 41.2 Ohm 1W
SM661010002	10	Cap Cera Chip 27PF +/- 5%
SM661011001	5	Cap Cera Chip 3.9pF 200V
SM661028100	15	Cap Cera Chip 1UF 10V
SM661066102	5	Cap Cera Chip 10% 1000PF/50V
SM661066102	10	Cap Cera Chip 10% 1000PF/50V
SM661066102	88	Cap Cera Chip 10% 1000PF/50V
SM661068104	5	Cap Cera Chip 0.1uF 0603
SM661068104	25	Cap Cera Chip 0.1uF 0603
SM661068104	120	Cap Cera Chip 0.1uF 0603
SM661073068	5	Cap Cera 6.8+/- 0.1PF 50V Npo
SM661073300	5	Cap Cera 30PF+/- 5% 50V Npo
SM661073331	3	Cap Cera 330PF+/- 5% 50V Npo
SM661073820	7	Cap Cera 82PF+/- 5% 50V Npo
SM661165102	3	Cap Cera Chip 1000PF
SM661207103	6	Cap Cera Chip 20% .01 UF
SM661207104	10	Cap Cera Chip 20 % .1 UF
SM661207104	223	Cap Cera Chip 20 % .1 UF
SM661207223	5	Cap Cera Chip 20% .022 UF
SM661255121	3	Cap Cera Chip 5% 120 PF
SM661540056	10	Cap Cera Chip 5.6PF 500V
SM661540068	5	Cap Cera Chip 6.8PF 500V
SM662131003	47	Cap Cera Chip 5% 50V .01 UF
SM662137001	14	Cap Cera +/-.1% 50V 1.5pF NPO
SM662137002	13	Cap Cera +/-.25% 50V 2.2pF NPO
SM662151001	42	Cap Cera Chip 10% 16V 0.1 UF
SM662152001	18	Cap Cera Chip 10% 16V 100nF
SM662212001	5	Cap Cera .015uF 10% 25V X7R
SM662232001	8	10000pf 0603 capacitor
SM662241001	5	Cap Cera 22pF +/- 5% 100V Npo
SM662252001	5	Cap Cera .068uF 10% 16V X7R
SM662382001	5	Cap Cera 1000pF 10% 500V X7R
SM662432001	1	Cap Cera 4700pF 10% 50V X7R
SM662432002	1	Cap Cera Chip 0.22uF 10% 50V
SM666267227	22	Cap Tant 220UF 10V 20%
SM668010335	15	Cap,tant 3.3UF/10V 20% L/Esr
SM668016226	58	Cap tant 22UF/16V 20 % L Esr
SM668025106	19	Cap,tant 10UF/25V 20% L Esr
SM668025334	10	Cap,tant .33UF/25V 20% L/Esr

7.17 901851-00: USB Hub

Part Number	Qty	Description
454014002	1	Conn Hdr R/A 14-Pos Wire-BD
454340002	4	Hdr Sold Tail/WW 2
901892-00	1	Waverunner HUB PCB
SM208550006	1	IC Volt Detector 4.5V TC54VC45
SM208580002	1	IC Reset M51957BFP
SM227470001	1	IC USB Hub Controller 1.1
SM227900002	1	IC 16-Bit Microcomputer USB
SM232550001	1	SCR/Diode ESD & OVP Array 6-Ch
SM270132222	2	Transistor Npn 2N2222A
SM275132907	2	Transistor Pnp 2907A
SM310000002	1	Crystal Resonator 6MHz
SM310716000	1	Crystal 16 MHz
SM311000010	1	Crystal Osc 6.0MHz 32pF
SM334010001	1	IC USB Touch Screen Contoller
SM453004002	1	Conn 4 Pos 1mm FFC FMS Series
SM453005001	3	Header 1 x 5 Shrouded
SM453026002	1	Conn .050" Hdr 26-Pos Male
SM652101152	1	Res Chip E24 1% 1.5 K
SM652101392	1	Res Chip (E24) 1% 3.9 K
SM652101472	21	Res Chip (E24) 1% 4.7 K
SM652101512	1	Res Chip (E24) 1% 5.1 K
SM653101230	10	Res Chip 1% 20.0 Ohms
SM653101330	1	Res Chip 1% 221 Ohms
SM653101393	2	Res Chip 1% 1.00 K
SM653101410	2	Res Chip 1% 1.50 K
SM653101439	1	Res Chip 1% 3.01 K
SM653101489	6	Res Chip 1 % 10.0 K
SM653101506	8	Res Chip 1% 15.0 K
SM654101000	1	Chip Jumper Zero Ohms
SM661073471	1	Cap Cera 470PF+/- 5% 50V Npo
SM661207103	1	Cap Cera Chip 20% .01 UF
SM661207104	10	Cap Cera Chip 20 % .1 UF
SM661540100	2	Cap Cera 10PF/500V Npo
SM662131003	4	Cap Cera Chip 5% 50V .01 UF
SM666267227	4	Cap Tant 220UF 10V 20%
SM668016226	2	Cap tant 22UF/16V 20 % L Esr

7.18 901853-00: CD R Assy

Part Number	Qty	Description
330000033	1	CD-ROM DRIVE 33.3MB
350480007	1	Gasket, EMI Fabric 3X3MMX3.9IN
561632604	6	Screw TX Pan #6-32 UNC 1/4" S3
563420003	4	SCREW TX PAN M2-0.4 X 3MM S1
563460006	2	SCREW TX PAN M2X0.4-6MM S1
900517-00	2	Retaining Spacer M2 2.85mm long
901504-00	1	CDROM Adapter PCA
454315004	1	Hdr Sold Tail/Male 4
454510104	1	Hdr Vert Male Shrouded 4 Pos
901502-00	1	WaveRunner CDROM Adapter PCB
901525-00	1	Cable Assy CDROM Drive
SM454204040	1	Hdr Male 40 Pos Idc
SM454520050	1	Conn Header 50 PIN Smt
901856-00	1	WaveRunner CD-ROM BRACKET
901857-00	1	WaveRunner CD-ROM EMI COVER
901858-00	1	CD-ROM Mounting Bracket

7.19 902029-00: WR6000 A Series, 2 Ch Front Frame Assy

Part Number	Qty	Description
902448-00	1	Display/Touchscreen Assy 8.4 I
258000010	1	LCD Backlight DC - AC Inverter
902375-00	1	S65 Sharp 2Ch Frnt Pnl Assy
902520-00	1	S65 Chassis Front Panel
901722-00	1	Elastomeric keymat - 2 channel
519260004	1	Shorty Snap-In Bushing ID .250
902206-00	1	Shield Backlight Inverter
901757-00	1	S65 2 Channel Front Frame Over
902579-00	1	S65 LVDS TTL Hub with Audio
575401007	4	Washer Flat Fiber #4
902558-00	1	2Ch Bezel w/ Fibre Washer
901445-00	1	S65 power button
901582-00	7	Knob small
901583-00	5	Knob medium
901584-00	2	Knob large
902359-00	1	S65 Sharp Backlight Cable
902432-00	1	Hub to LCD display cable
901700-00	1	INPUT OVERLAY
544220007	1	Spring Compression 0.34L
561440404	12	Screw TX Pan #4-40 UNC 1/4 in
563425006	10	SCREW TX PAN M2.5X0.4-6MM S1
594120004	3	Cable Tie With Screw Base
594120006	2	Tiewrap
901983-00	1	Cable Assy Audio

902029-00: WR6000 A Series, 2 Ch Front Frame Assy (con't)

Part Number	Qty	Description
592060001	1	3.5 Inch Cable Assy 26-Pos
561440406	3	Screw TX Pan #4-40 UNF 3/8" S1
519260003	2	Shorty Snap-In Bushing ID .500
530009005	3	Shield (RFI/EMI) Finger Stock
575100004	3	Washer Flat M2.5 6mmOD .5mmS
350187001	1	Gasket Ultra Soft Knit 13 in
561440401	4	Screw TX Pan #4-40 UNC 3/16"
902485-00	1	Speaker Assembly
551430100	4	Flat Washer M3
902431-00	1	DVO to Hub board cable

7.20 902030-00: WR6000 A Series, 4 Ch Front Frame Assy

Part Number	Qty	Description
902448-00	1	Display/Touchscreen Assy 8.4 I
902373-00	1	S65 Sharp 4Ch Front Pnl Assy
902520-00	1	S65 Chassis Front Panel
902579-00	1	S65 LVDS TTL Hub with Audio
902534-00	1	Bezel w/ Fibre Washer
902359-00	1	S65 Sharp Backlight Cable
902432-00	1	Hub to LCD display cable
901983-00	1	Cable Assy Audio
902485-00	1	Speaker Assembly
902431-00	1	DVO to Hub board cable
258000010	1	LCD Backlight DC - AC Inverter
901433-00	1	Elastomeric Keymat for Front P
519260004	1	Shorty Snap-In Bushing ID .250
902206-00	1	Shield Backlight Inverter
901489-00	1	WR6K 4 Ch Front Panel Overlay
575401007	4	Washer Flat Fiber #4
901445-00	1	S65 power button
901582-00	9	Knob small
901583-00	7	Knob medium
901584-00	2	Knob large
901700-00	1	INPUT OVERLAY
544220007	1	Spring Compression 0.34L
561440404	12	Screw TX Pan #4-40 UNC 1/4 in
563425006	9	SCREW TX PAN M2.5X0.4-6MM S1
594120004	3	Cable Tie With Screw Base
594120006	2	Tiewrap
592060001	1	3.5 Inch Cable Assy 26-Pos
561440406	3	Screw TX Pan #4-40 UNF 3/8" S1
519260003	2	Shorty Snap-In Bushing ID .500

902030-00: WR6000 A Series, 4 Ch Front Frame Assy (con't)

Part Number	Qty	Description
530009005	3	Shield (RFI/EMI) Finger Stock
575100004	3	Washer Flat M2.5 6mmOD .5mmS
350187001	1	Gasket Ultra Soft Knit 13 in
561440401	4	Screw TX Pan #4-40 UNC 3/16"
551430100	4	Flat Washer M3

7.21 902373-00: 4 Channel Encoder Board

Part Number	Qty	Description
425100007	5	Encoder 20mm Detent
425100009	4	Encoder 20mm Detent JOG
425100010	9	Encoder 20mm Detent JOG PB
902374-00	1	4-Ch Sharp Frnt Pnl PCB 4-Laye
SM190105001	1	Resistor Network 10K Ohm 5%
SM190105003	2	Resistor Network 100K Ohm 5%
SM202051011	2	IC 3-to-8 Line Decoder VHC138
SM202109001	1	IC 16-Bit IIC LED Driver PCA95
SM207630574	1	IC 8-Bit I/O Expander I2C Bus
SM253032820	59	Diode Schottky 2820
SM256000001	1	DIODE LED RED 2MM
SM256000004	1	DIODE LED BLUE 2MM
SM256000005	9	DIODE LED AQUA GREEN 2MM
SM256000006	1	DIODE LED SP YELLOW 2MM
SM453026002	1	Conn .050 inch Hdr 26-Pos Male
SM653101273	1	Res Chip 1% 56.2 Ohms
SM653101301	8	Res Chip 1% 110 Ohms
SM653101343	1	Res Chip 1% 301 Ohms
SM653101489	8	Res Chip 1 % 10.0 K
SM654101000	2	Chip Jumper Zero Ohms
SM654101000	2	Chip Jumper Zero Ohms
SM654101000	2	Chip Jumper Zero Ohms
SM661207104	4	Cap Cera Chip 20 % .1 UF
SM666487105	2	Cap Mold EIA Chip 1uF 10%

7.22 902375-00: 2 Channel Encoder Board

Part Number	Qty	Description
425100007	3	Encoder 20mm Detent
425100009	4	Encoder 20mm Detent JOG
425100010	7	Encoder 20mm Detent JOG PB
902376-00	1	Sharp 2Ch Frnt Pnl PCB 4-Layer
SM190105001	1	Resistor Network 10K Ohm 5%
SM190105003	2	Resistor Network 100K Ohm 5%
SM202051011	2	IC 3-to-8 Line Decoder VHC138
SM202109001	1	IC 16-Bit IIC LED Driver PCA95
SM207630574	1	IC 8-Bit I/O Expander I2C Bus
SM253032820	47	Diode Schottky 2820
SM256000001	1	DIODE LED RED 2MM
SM256000005	8	DIODE LED AQUA GREEN 2MM
SM256000006	1	DIODE LED SP YELLOW 2MM
SM453026002	1	Conn .050 inch Hdr 26-Pos Male
SM653101301	8	Res Chip 1% 110 Ohms
SM653101343	1	Res Chip 1% 301 Ohms
SM653101489	8	Res Chip 1 % 10.0 K
SM654101000	3	Chip Jumper Zero Ohms
SM654101000	2	Chip Jumper Zero Ohms
SM661207104	4	Cap Cera Chip 20 % .1 UF
SM666487105	2	Cap Mold EIA Chip 1uF 10%

7.23 902434-00: Top Cover Assy

Part Number	Qty	Description
530301022	1	Handle Assembly 9" 184F
562632404	6	Screw TX Flat #6-32UNC 1/4" S1
902430-00	1	WaveRunner Top Cover Standard
901487-00	4	WaveRunner Side Foot

7.24 902572-00: AGP/DVO Interface

Part Number	Qty	Description
902571-00	1	DVO Display Adapter PCB
SM205108132	1	IC Eeprom 32K Bit IIC Bus
SM207010002	1	IC CMOS 8 BIT LOW RES BUS SWIT
SM207010013	1	Display Driver DVO to LVDS TFT
SM208542915	1	1.5A Low-Dropout volt reg adj
SM280120605	2	Low Power Nmosfet
SM281126402	3	P-Channel Mosfet IRLML6402
SM301004001	2	Bead Ferrite 50 Ohms 3AMPS 120
SM311414318	1	Crystal Oscillator 14.31818MHZ
SM453005002	1	Header 1 x 5 Shrouded Side Ent
SM453020004	1	Conn Hdr R/A 20 Pos Wire-BD
SM652061102	2	Res Chip 1% 1.0K Ohm .063W
SM652061101	2	Res Chip 1% 100 Ohm .063W
SM652061102	3	Res Chip 1% 1.0K Ohm .063W
SM652061102	15	Res Chip 1% 1.0K Ohm .063W
SM652061510	2	Res Chip 1% 51.0 Ohm .063W
SM652101102	4	Res Chip (E24) 1% 1 K
SM652101222	4	Res Chip (E24) 1% 2.2 K
SM652101331	1	Res Chip (E24) 1% 330 Ohm
SM653101458	6	Res Chip 1 % 4.75 K
SM653101653	1	Res Thk Flm 1% 511K Ohm
SM654101000	2	Chip Jumper Zero Ohms
SM654101000	1	Chip Jumper Zero Ohms
SM655030036	2	Res Thk Film 1% 80.6 Ohm 1/16W
SM655040017	4	Res Chip 1.24K OHM 1% 1/10W 08
SM661028100	1	Cap Cera Chip 1UF 10V
SM661207103	4	Cap Cera Chip 20% .01 UF
SM661207104	14	Cap Cera Chip 20 % .1 UF
SM661255471	2	Cap Cera Chip 5 % 470 PF
SM668016226	5	Cap tant 22UF/16V 20 % L Esr
SM669080181	2	Chip Ferrite Bead

7.25 902579-00: USB Hub with Audio

Part Number	Qty	Description
454004003	1	Conn Header Vert 4-Pos Wire-BD
454014002	1	Conn Hdr R/A 14-Pos Wire-BD
454340002	4	Hdr Sold Tail/WW 2
902578-00	1	WaveRunner LVDS TTL Hub with Audio PC
SM207010027	1	IC LVDS FatLink Receiver
SM208400008	1	IC Mono 1.5W Stereo 250mW Amp
SM208550006	1	IC Volt Detector 4.5V TC54VC45
SM208580002	1	IC Reset M51957BFP
SM227470001	1	IC USB Hub Controller 1.1
SM227900002	1	IC 16-Bit Microcomputer USB
SM232550001	1	SCR/Diode ESD and OVP Array 6-
SM270132222	1	Transistor Npn 2N2222A
SM275132907	1	Transistor Pnp 2907A
SM301004001	2	Bead Ferrite 50 Ohms 3AMPS 120
SM310000002	1	Crystal Resonator 6MHz
SM310716000	1	Crystal 16 MHz
SM311000010	1	Crystal Osc 6.0MHz 32pF
SM334010001	1	IC USB Touch Screen Contoller
SM453004003	1	Conn FFC/FPC ZIF 4 Pos R/A
SM453005001	4	Header 1 x 5 Shrouded
SM453020004	1	Conn Hdr R/A 20 Pos Wire-BD
SM453026002	1	Conn .050 inch Hdr 26-Pos Male
SM453030002	1	Conn Hdr R/A 30-Pos Wire-BD
SM652061000	24	Res Chip 0 Ohm Jumper
SM652061101	4	Res Chip 1% 100 Ohm .063W
SM652101152	1	Res Chip E24 1% 1.5 K
SM652101392	1	Res Chip E24 1% 3.9 K
SM652101472	13	Res Chip E24 1% 4.7 K
SM652101512	1	Res Chip E24 1% 5.1 K
SM653101230	10	Res Chip 1% 20.0 Ohms
SM653101330	1	Res Chip 1% 221 Ohms
SM653101393	3	Res Chip 1% 1.00 K
SM653101410	3	Res Chip 1% 1.50 K
SM653101439	1	Res Chip 1% 3.01 K
SM653101489	6	Res Chip 1 % 10.0 K
SM653101506	8	Res Chip 1% 15.0 K
SM653101518	2	Res Chip 1% 20.0 K
SM653101535	2	Res Chip 1% 30.1 K
SM653101585	1	Res Chip 1% 100 K
SM654101000	1	Chip Jumper Zero Ohms
SM654101000	1	Chip Jumper Zero Ohms
SM661068104	7	Cap Cera Chip 0.1uF 0603
SM661073471	1	Cap Cera 470PF+/- 5% 50V Npo

902579-00: USB Hub with Audio (con't)

Part Number	Qty	Description
SM661207103	1	Cap Cera Chip 20% .01 UF
SM661207104	10	Cap Cera Chip 20 % .1 UF
SM661540100	2	Cap Cera 10PF/500V Npo
SM662111001	4	Cap Cera Chip 1.00 UF 16V
SM662131003	4	Cap Cera Chip 5% 50V .01 UF
SM662232001	9	10000pf 0603 capacitor
SM666267227	4	Cap Tant 220UF 10V 20%
SM668016226	4	Cap tant 22UF/16V 20 % L Esr
SM669080181	7	Chip Ferrite Bead

7.26 902600-00: WR 6030A 350 MHz 2.5 GS/s 4 Ch Acquisition Board

Part Number	Qty	Description
335970001	1	Probe Hook
402120004	1	Conn RT Angle Fem Bnc
416162005	1	Switch R/A PCB Mtg SPDT MOM
430500003	4	20DB Attenuator Relay DC-3GHZ
454000018	1	Hdr Sold Tail Male 18 Pin HI T
454004002	1	Conn Receptacle USB R/A 4 Pos
454016002	1	Conn Hdr Vert 16 Pos Wire-BD
454022001	1	HEADER VERT 22 POS WIRE BD
454040003	2	Conn Hdr Vert 40-Pos Male Shrd
454117003	4	Friction Header Straight .1 CE
454312010	4	Hdr Sold Tail/Male 10
469040002	1	Metal Banana Jack/Binding Post
522632120	6	Standoff Hex 6-32X5/8 F/F
524632015	4	Standoff Hex 6-32 X 1/2 FF
550011106	10	Screw Pan HD M2X6 Blk W/Nylock
551620100	10	#2 Flat Washer S.steel/Black O
555465002	1	Washer Lock Split 1/4
561632405	16	Screw TX Pan #6-32UNC 5/16" S1
590441024	0.07	Wire Teflon 7/32 Yel 24
594120006	2	Tiewrap
709614300	5	Bulkhead Receptical Female Bnc
709614301	5	BNC Lock Washer
709614302	5	BNC Nut
7093XXP01	5	Right Angle Recept. Connector
7093XXP41	5	Probe Holder
7093XXP91	5	Probe Ring Contact
901140-00	4	Chip Atten. 3dB .5% Trim Res
901336-00	1	Heatsink WaveRunner MST/MTB
901436-00	1	WaveRunner Front Card Panel Assy Upda
901437-00	2	Heatsink Base - HAD
901440-00	1	Heatsink Base mst/mtb

902600-00: WR 6030A 350 MHz 2.5 GS/s 4 Ch Acq Board (con't)

Part Number	Qty	Description
901441-00	1	Heatsink clip mst-mtb
901622-00	1	EMI shield - 10 GHZ clock
901685-00	5	Upper front end EMI shield
901686-00	5	Lower front end EMI shield
901693-00	1	Gap pad MST die cut
901694-00	1	Gap pad HTB die cut
901709-00	5	Malico 30mm heat sink assy
901790-00	2	WaveRunner CLOCK EMI SHIELD 0.4 IN. H
901807-00	1	ALUM. SPACER
901835-00	1	CABLE WaveRunner 10GHz MTB COAX
901835-01	1	CABLE WaveRunner 10GHz CH1 COAX
901835-02	1	CABLE WaveRunner 10GHz CH3 COAX
901882-00	1	Waverunner Acq. PCB
902138-00	2	Die cut GDS material with adhe
902463-00	2	WaveRunner Backbone
902528-00	6	Thermal Gap Pad Die-Cut
902530-00	2	Integrated Chip Cooler
CH599012012	0.1	5-Minute Epoxy
CH599041022	1	Heat Sink Compound 251
HAD639C-02	2	Packaged MAD440E 10GS/s SiGe
HFE653B	5	Front End Amplifier
HTB645	1	Hybrid Pkgd Timebase Trigger
MAM439	6	Monolithic 8 Megabyte Dram Mem
MST429A	1	IC Smart Trigger Gate-Array
SM158021002	10	Cap Variable 0.5-2.5pF 250V
SM158070200	10	Cap Variable 4.5-20.0 PF
SM185457102	5	Res Vari Cermet 1 K
SM185457201	1	Res Vari Cermet 200 Ohms
SM185457503	5	Res Vari Cermet 50 K
SM200180032	1	IC 2-in OR Gate 74VHC1G32
SM200588014	1	Hex Schmitt-Trig Inv 74HCT14
SM201274033	1	IC Ecl Divide BY 4 MC10EL33
SM201570016	2	IC Ecl Diff Receiver 10EL16D
SM201774025	3	Diff Ecl-Ttl Transl 10ELT25
SM202057002	1	IC Triple 2-CH Analog Mux
SM202059003	1	ECL Diff Rec/Driv w/Enable Out
SM202100004	1	IC PLL Freq Synth 4106 6 GHz
SM202102001	1	IC ECL /PECL 1:5 DIFF CLK DRVR
SM202107002	1	100EP57 4:1 MUX
SM205129160	1	IC FLASH MEM 16 MBIT HY29LV160
SM205200002	1	IC 8M x 8 Bit 133MHz SDRAM
SM205616001	5	IC 8-Bit Shift Reg 74LV594ADR
SM205625616	1	IC 256K X 16 CMOS SRAM

902600-00: WR 6030A 350 MHz 2.5 GS/s 4 Ch Acq Board (con't)

Part Number	Qty	Description
SM205715003	2	IC PAL FG456 Fine-Pitch BGA
SM206178125	1	IC Quad Bfr Line Drvr 3 State
SM206370024	3	IC Ttl TO Diff Ecl Transl MC10
SM207010002	3	IC CMOS 8 BIT LOW RES BUS SWIT
SM207010011	2	IC Quad 10-Bit DAC LTC1664
SM207010014	1	16 Bit Buffer/Driver 3-State
SM207131660	1	IC Dac Octal 10BIT Serial Unip
SM207231654	4	IC Dual 14-Bit Serial Dac
SM207770442	5	IC Analog Switch DG442
SM207944351	5	OCTAL ANALOG MUX/DEMUX 74HCT43
SM208400001	3	IC MMIC Amplifier 12GHz NBB-30
SM208400002	1	IC MMIC Amplifier 8GHz NBB-400
SM208470353	8	IC Dual OP Amp LF353
SM208470656	5	IC FET-Input OP Amp OPA656U
SM208470705	11	IC OP Amp Picoamp Input AD705
SM208472022	7	Opamp, Dual, Low Pwr TLE2022C
SM208475460	5	IC OP Amp Sin-Sup RtoR Ins Amp
SM208476482	2	IC Dual OP Amp Rail TO Rail 64
SM208550004	8	IC Volt Reg Pos Adjust LDO
SM208550337	1	IC Volt Reg Adj LM337
SM208550821	1	Voltage Monitor MAX821
SM208556138	1	IC Volt Ref 4.096V 0.1% 25ppm
SM208701023	11	IC Temperature Sensor
SM208909850	1	DDS-125MHZ Cmos Synth AD9850
SM227110161	1	16 BIT MICROCONTROLLER C161PI
SM229020150	5	MLC Trans Volt Suppressor
SM232022824	1	Diode Array Schottky HSMS2824
SM232030001	10	Diode Array Schottky HSMS-282C
SM232442828	5	Diode Bridge HSMS2828
SM236030099	11	Diode SO-Pkg BAV99
SM252005303	10	Pin Diode Bar 63-03W
SM252023066	20	Pin Diode Bar 66
SM252023304	5	Dual Pin Diode Silicon Bar 63-
SM256232013	1	Diode Light Emitting Red
SM270050520	15	NPN 9GHZ Wideband Transistor
SM270130092	6	Transistor Npn BFR92A
SM270330848	2	Transistor Npn BC848C
SM275030550	5	Transistor Pnp BF550
SM275132907	1	Transistor Pnp 2907A
SM280122416	5	Trans. Jfet N MMBF4416/LC6A
SM280217505	2	Mosfet Nchanel 75A 50V D2P
SM281115003	4	P-CH Hdtmos Pwr E-Fet MTB50P03
SM289772003	5	Transistor Array 2003
SM300092390	1	Inductor Wound 2% 39 NH

902600-00: WR 6030A 350 MHz 2.5 GS/s 4 Ch Acq Board (con't)

Part Number	Qty	Description
SM300600009	2	Inductor 9.3uH 7.2A Wound
SM300600012	2	Inductor 150nH 5% Wound
SM301001001	16	BEAD FERRITE
SM301001002	6	Bead SHF 0.3A
SM301001016	4	Inductor Pwr Toroid 272uH .36A
SM301001017	3	Inductor Chip 10% 15uH 1210
SM301001018	1	Inductor Shielded 100uH 10%
SM301004001	40	Bead Ferrite 50 Ohms 3AMPS 120
SM311000005	1	Crystal Oscillator 16 MHz 3.3V
SM311000006	1	Voltage Controlled Oscillator
SM311000013	1	Crystal Osc TCXO 10MHz
SM430530001	20	Relay Smd Dual Form C 5V
SM431030005	5	Relay SPDT HF 50 Ohm 4.5V
SM433695250	2	PTC Resettable Device 2.5A
SM453005001	3	Header 1 x 5 Shrouded
SM507000002	2	Heatsink Surface Mount TO-263
SM651081102	8	Res Chip 0.1% 1 Kohm
SM652000005	10	Res RF 100 Ohm .25% 1/3W 1206
SM652041000	49	Res Zero ohms
SM652041011	52	Res Chip 1% 49.9 Ohms
SM652041200	11	Res 20 Ohms +/-1% 1/16W 0402 S
SM652041750	1	Res 75 OHM +/-1% 1/16W
SM652061000	11	Res Chip 0 Ohm Jumper
SM652061000	10	Res Chip 0 Ohm Jumper
SM652061100	20	Res Chip 1% 10.0 Ohm .063W
SM652061100	10	Res Chip 1% 10.0 Ohm .063W
SM652061101	10	Res Chip 1% 100 Ohm .063W
SM652061101	12	Res Chip 1% 100 Ohm .063W
SM652061101	3	Res Chip 1% 100 Ohm .063W
SM652061102	5	Res Chip 1% 1.0K Ohm .063W
SM652061102	16	Res Chip 1% 1.0K Ohm .063W
SM652061102	23	Res Chip 1% 1.0K Ohm .063W
SM652061103	19	Res Chip 1% 10K Ohm .063W
SM652061103	6	Res Chip 1% 10K Ohm .063W
SM652061105	1	Res Chip 1% 1.0M Ohm .063W
SM652061105	5	Res Chip 1% 1.0M Ohm .063W
SM652061106	5	Res Chip 1% 10M Ohm .063W
SM652061112	10	Res Chip 1% 1.1K Ohm .063W
SM652061121	15	Res Chip 1% 120 Ohm .063W
SM652061121	50	Res Chip 1% 120 Ohm .063W
SM652061133	4	Res Chip 1% 13K Ohm .063W
SM652061154	5	Res Chip 1% 150K Ohm .063W
SM652061161	15	Res Chip 1% 160 Ohm .063W

902600-00: WR 6030A 350 MHz 2.5 GS/s 4 Ch Acq Board (con't)

Part Number	Qty	Description
SM652061200	1	Res Chip 1% 20.0 Ohm .063W
SM652061201	5	Res Chip 1% 200 Ohm .063W
SM652061201	14	Res Chip 1% 200 Ohm .063W
SM652061201	1	Res Chip 1% 200 Ohm .063W
SM652061203	11	Res Chip 1% 20K Ohm .063W
SM652061221	18	Res Chip 1% 220 Ohm .063W
SM652061222	2	Res Chip 1% 2.2K Ohm .063W
SM652061222	4	Res Chip 1% 2.2K Ohm .063W
SM652061222	5	Res Chip 1% 2.2K Ohm .063W
SM652061240	5	Res Chip 1% 24.0 Ohm .063W
SM652061240	1	Res Chip 1% 24.0 Ohm .063W
SM652061271	10	Res Chip 1% 270 Ohm .063W
SM652061271	2	Res Chip 1% 270 Ohm .063W
SM652061271	4	Res Chip 1% 270 Ohm .063W
SM652061271	20	Res Chip 1% 270 Ohm .063W
SM652061273	5	Res Chip 1% 27K Ohm .063W
SM652061273	20	Res Chip 1% 27K Ohm .063W
SM652061332	5	Res Chip 1% 3.3K Ohm .063W
SM652061332	4	Res Chip 1% 3.3K Ohm .063W
SM652061334	1	Res Chip 1% 330K Ohm .063W
SM652061361	3	Res Chip 1% 360 Ohm .063W
SM652061361	15	Res Chip 1% 360 Ohm .063W
SM652061361	5	Res Chip 1% 360 Ohm .063W
SM652061390	5	Res Chip 1% 39.0 Ohm .063W
SM652061390	41	Res Chip 1% 39.0 Ohm .063W
SM652061393	5	Res Chip 1% 39K Ohm .063W
SM652061393	1	Res Chip 1% 39K Ohm .063W
SM652061393	5	Res Chip 1% 39K Ohm .063W
SM652061394	5	Res Chip 1% 390K Ohm .063W
SM652061430	10	Res Chip 1% 43.2 Ohm .063W
SM652061431	1	Res Chip 1% 430 Ohm .063W
SM652061432	6	Res Chip 1% 4.3K Ohm .063W
SM652061471	5	Res Chip 1% 470 Ohm .063W
SM652061510	12	Res Chip 1% 51.0 Ohm .063W
SM652061510	25	Res Chip 1% 51.0 Ohm .063W
SM652061510	5	Res Chip 1% 51.0 Ohm .063W
SM652061511	6	Res Chip 1% 510 Ohm .063W
SM652061512	5	Res Chip 1% 5.1K Ohm .063W
SM652061513	5	Res Chip 1% 51K Ohm .063W
SM652061562	5	Res Chip 1% 5.6K Ohm .063W
SM652061680	5	Res Chip 1% 68.0 Ohm .063W
SM652061681	1	Res Chip 1% 681 Ohm .063W
SM652061681	5	Res Chip 1% 681 Ohm .063W
SM652061751	1	Res Chip 1% 750 Ohm .063W

902600-00: WR 6030A 350 MHz 2.5 GS/s 4 Ch Acq Board (con't)

Part Number	Qty	Description
SM652061751	5	Res Chip 1% 750 Ohm .063W
SM652061824	5	Res Chip 1% 820K Ohm .063W
SM652061912	5	Res Chip 1% 9.1K Ohm .063W
SM652069393	10	Res Chip (E24) .1% 39K
SM652101101	2	Res Chip (E24) 1% 100 Ohm
SM652101302	1	Res Chip (E24) 1% 3 K
SM652101395	5	Res Chip (E24) 1% 3.9 M
SM653041297	5	RES CHIP 1% 100 OHMS 0402
SM653101226	1	Res Chip 1% 18.2 Ohms
SM653101262	9	Res Chip 1% 43.2 Ohms
SM653101277	7	Res Chip 1% 61.9 Ohms
SM653101285	5	Res Chip 1 % 75.0 Ohms
SM653101297	19	Res Chip 1% 100 Ohms
SM653101322	17	Res Chip 1% 182 Ohms
SM653101326	7	Res Chip 1% 200 Ohms
SM653101334	8	Res Chip 1% 243 Ohms
SM653101347	1	Res Chip 1% 332 Ohms
SM653101354	16	Res Chip 1% 392 Ohms
SM653101377	7	Res Chip 1% 681 Ohms
SM653101393	33	Res Chip 1% 1.00 K
SM653101397	1	Res Chip 1% 1.10 K
SM653101401	4	Res Chip 1% 1.21 K
SM653101410	16	Res Chip 1% 1.50 K
SM653101422	33	Res Chip 1% 2.00 K
SM653101422	4	Res Chip 1% 2.00 K
SM653101422	12	Res Chip 1% 2.00 K
SM653101426	9	Res Chip 1 % 2.21K
SM653101430	3	Res Chip 1% 2.43 K
SM653101435	2	Res Chip 1% 2.74 K
SM653101458	10	Res Chip 1 % 4.75 K
SM653101461	8	Res Chip 1% 5.11 K
SM653101469	1	Res Chip 1% 6.19 K
SM653101477	13	Res Chip 1% 7.50 K
SM653101489	20	Res Chip 1 % 10.0 K
SM653101489	4	Res Chip 1 % 10.0 K
SM653101506	5	Res Chip 1% 15.0 K
SM653101518	7	Res Chip 1% 20.0 K
SM653101539	8	Res Chip 1% 33.2 K
SM653101589	9	Res Chip 1% 110 K
SM653185193	1	Res Thick Film 9.09 Ohms
SM654101000	9	Chip Jumper Zero Ohms
SM654101000	12	Chip Jumper Zero Ohms
SM655020002	10	RES CHIP 1% 174 OHMS

902600-00: WR 6030A 350 MHz 2.5 GS/s 4 Ch Acq Board (con't)

Part Number	Qty	Description
SM655020017	30	Res Thk Film 1% 1K Ohm 1/16W
SM655020025	18	Res Thk Film 1% 2.74 Ohm 1/16W
SM655020031	10	Res Thk Film 1% 8.25 Ohm 1/16W
SM655030040	10	Res Thk Film +/-1% 5.11 Ohm .1
SM655030042	5	Res Thk Film 1% 5.6M Ohm 1/16W
SM655040022	5	Res Chip .5% 50ppm 180K 150V
SM655040023	5	Res Chip .5% 50ppm 240K 150V
SM655040024	40	Res Chip .5% 50ppm 300K 150V
SM655040025	10	Res Chip .5% 50ppm 110K 150V
SM655040026	1	Res Thk Film 41.2 Ohm .5% 1/8W
SM655040027	2	Res Thk Film 20 Ohm .5% 1/8W
SM655063001	2	Res Thk Film 5% 1.5 Ohms 1/8W
SM655080004	5	Res Thk Film 1 Ohm +/- 5% 1/2W
SM655080005	8	Res Thk Film 1% 105 Ohm 1/2W
SM655080009	1	Res Thk Film 0.5% 41.2 Ohm 1W
SM661010002	10	Cap Cera Chip 27PF +/- 5%
SM661010003	10	Cap Cera Chip 10% 16V 33nF
SM661011001	5	Cap Cera Chip 3.9pF 200V
SM661028100	15	Cap Cera Chip 1UF 10V
SM661028100	1	Cap Cera Chip 1UF 10V
SM661066102	88	Cap Cera Chip 10% 1000PF/50V
SM661066102	17	Cap Cera Chip 10% 1000PF/50V
SM661068104	5	Cap Cera Chip 0.1uF 0603
SM661068104	120	Cap Cera Chip 0.1uF 0603
SM661068104	21	Cap Cera Chip 0.1uF 0603
SM661073020	5	Cap Cera 2.0+/- 0.1PF 50V Npo
SM661073056	5	Cap Cera 5.6+/- 0.1PF 50V Npo
SM661073300	5	Cap Cera 30PF+/- 5% 50V Npo
SM661073331	3	Cap Cera 330PF+/- 5% 50V Npo
SM661073820	7	Cap Cera 82PF+/- 5% 50V Npo
SM661165102	3	Cap Cera Chip 1000PF
SM661207103	6	Cap Cera Chip 20% .01 UF
SM661207104	10	Cap Cera Chip 20 % .1 UF
SM661207104	218	Cap Cera Chip 20 % .1 UF
SM661207223	5	Cap Cera Chip 20% .022 UF
SM661255015	1	Cap Cera Chip 1.5 PF
SM661255121	3	Cap Cera Chip 5% 120 PF
SM661540056	10	Cap Cera Chip 5.6PF 500V
SM661540068	5	Cap Cera Chip 6.8PF 500V
SM662131003	48	Cap Cera Chip 5% 50V .01 UF
SM662135002	28	Cap Cera +/-.1pF 50V 1.0pF NPO
SM662137003	14	Cap Cera +/-.25% 50V 8.2pF NPO
SM662151001	42	Cap Cera Chip 10% 16V 0.1 UF
SM662152001	18	Cap Cera Chip 10% 16V 100nF

902600-00: WR 6030A 350 MHz 2.5 GS/s 4 Ch Acq Board (con't)

Part Number	Qty	Description
SM662212001	5	Cap Cera .015uF 10% 25V X7R
SM662232001	8	10000pf 0603 capacitor
SM662241001	5	Cap Cera 22pF +/- 5% 100V Npo
SM662252001	5	Cap Cera .068uF 10% 16V X7R
SM662382001	5	Cap Cera 1000pF 10% 500V X7R
SM662432001	1	Cap Cera 4700pF 10% 50V X7R
SM662432002	1	Cap Cera Chip 0.22uF 10% 50V
SM662913001	63	Cap Cera Chip 10uF 20% 25V X5R
SM666267227	24	Cap Tant 220UF 10V 20%
SM668016226	48	Cap tant 22UF/16V 20 % L Esr
SM668025106	2	Cap,tant 10UF/25V 20% L Esr
SM669045002	28	Inductor 15nH 5%
SM669117001	12	Inductor Chip 2.2uH 20% 350mA
SM669854001	2	Inductor Chip 15uH 15% 2.97A

7.27 902601-00: WR 6051A 500 MHz 5 GS/s 2 Ch Acquisition Board

Part Number	Qty	Description
335970001	1	Probe Hook
402120004	1	Conn RT Angle Fem Bnc
416162005	1	Switch R/A PCB Mtg SPDT MOM
430500003	2	20DB Attenuator Relay DC-3GHZ
454000018	1	Hdr Sold Tail Male 18 Pin HI T
454004002	1	Conn Receptacle USB R/A 4 Pos
454016002	1	Conn Hdr Vert 16 Pos Wire-BD
454022001	1	HEADER VERT 22 POS WIRE BD
454040003	2	Conn Hdr Vert 40-Pos Male Shrd
454117003	3	Friction Header Straight .1 CE
454312010	4	Hdr Sold Tail/Male 10
469040002	1	Metal Banana Jack/Binding Post
522632120	6	Standoff Hex 6-32X5/8 F/F
524632015	4	Standoff Hex 6-32 X 1/2 FF
550011106	6	Screw Pan HD M2X6 Blk W/Nylock
551620100	6	#2 Flat Washer S.steel/Black O
555465002	1	Washer Lock Split 1/4
561632405	16	Screw TX Pan #6-32UNC 5/16" S1
590441024	0.07	Wire Teflon 7/32 Yel 24
594120006	2	Tiewrap
709614300	3	Bulkhead Receptical Female Bnc
709614301	3	BNC Lock Washer
709614302	3	BNC Nut
7093XXP01	3	Right Angle Recept. Connector
7093XXP41	3	Probe Holder
7093XXP91	3	Probe Ring Contact
901140-00	2	Chip Atten. 3dB .5% Trim Res
901336-00	1	Heatsink WaveRunner MST/MTB
901436-00	1	WaveRunner Front Card Panel Assy Upda
901437-00	1	Heatsink Base - HAD
901440-00	1	Heatsink Base mst/mtb
901441-00	1	Heatsink clip mst-mtb
901622-00	1	EMI shield - 10 GHZ clock
901685-00	3	Upper front end EMI shield
901686-00	3	Lower front end EMI shield
901693-00	1	Gap pad MST die cut
901694-00	1	Gap pad HTB die cut
901709-00	3	Malico 30mm heat sink assy
901790-00	2	WaveRunner CLOCK EMI SHIELD 0.4 IN. H
901807-00	1	ALUM. SPACER
901835-00	1	CABLE WaveRunner 10GHz MTB COAX
901835-01	1	CABLE WaveRunner 10GHz CH1 COAX
901882-00	1	Waverunner Acq. PCB
902138-00	1	Die cut GDS material with adhe

902601-00: WR 6051A 500 MHz 5 GS/s 2 Ch Acq Board (con't)

Part Number	Qty	Description
902463-00	2	WaveRunner Backbone
902528-00	3	Thermal Gap Pad Die-Cut
902530-00	1	Integrated Chip Cooler
CH599012012	0.1	5-Minute Epoxy
CH599041022	1	Heat Sink Compound 251
HAD639C-02	1	Packaged MAD440E 10GS/s SiGe
HFE653B	3	Front End Amplifier
HTB645	1	Hybrid Pkgd Timebase Trigger
MAM439	3	Monolithic 8 Megabyte Dram Mem
MST429A	1	IC Smart Trigger Gate-Array
SM158021002	6	Cap Variable 0.5-2.5pF 250V
SM158070200	6	Cap Variable 4.5-20.0 PF
SM185457102	3	Res Vari Cermet 1 K
SM185457201	1	Res Vari Cermet 200 Ohms
SM185457503	3	Res Vari Cermet 50 K
SM200180032	1	IC 2-in OR Gate 74VHC1G32
SM200588014	1	Hex Schmitt-Trig Inv 74HCT14
SM201274033	1	IC Ecl Divide BY 4 MC10EL33
SM201570016	2	IC Ecl Diff Receiver 10EL16D
SM201774025	3	Diff Ecl-Ttl Transl 10ELT25
SM202057002	1	IC Triple 2-CH Analog Mux
SM202059003	1	ECL Diff Rec/Driv w/Enable Out
SM202100004	1	IC PLL Freq Synth 4106 6 GHz
SM202102001	1	IC ECL /PECL 1:5 DIFF CLK DRVR
SM202107002	1	100EP57 4:1 MUX
SM205129160	1	IC FLASH MEM 16 MBIT HY29LV160
SM205200002	1	IC 8M x 8 Bit 133MHz SDRAM
SM205616001	3	IC 8-Bit Shift Reg 74LV594ADR
SM205625616	1	IC 256K X 16 CMOS SRAM
SM205715003	2	IC PAL FG456 Fine-Pitch BGA
SM206178125	1	IC Quad Bfr Line Drvr 3 State
SM206370024	3	IC Ttl TO Diff Ecl Transl MC10
SM207010002	3	IC CMOS 8 BIT LOW RES BUS SWIT
SM207010011	2	IC Quad 10-Bit DAC LTC1664
SM207010014	1	16 Bit Buffer/Driver 3-State
SM207131660	1	IC Dac Octal 10BIT Serial Unip
SM207231654	2	IC Dual 14-Bit Serial Dac
SM207770442	3	IC Analog Switch DG442
SM207944351	5	OCTAL ANALOG MUX/DEMUX 74HCT43
SM208400001	3	IC MMIC Amplifier 12GHz NBB-30
SM208400002	1	IC MMIC Amplifier 8GHz NBB-400
SM208470353	8	IC Dual OP Amp LF353
SM208470656	3	IC FET-Input OP Amp OPA656U

902601-00: WR 6051A 500 MHz 5 GS/s 2 Ch Acq Board (con't)

Part Number	Qty	Description
SM208470705	7	IC OP Amp Picoamp Input AD705
SM208472022	5	Opamp, Dual, Low Pwr TLE2022C
SM208475460	3	IC OP Amp Sin-Sup RtoR Ins Amp
SM208476482	2	IC Dual OP Amp Rail TO Rail 64
SM208550004	7	IC Volt Reg Pos Adjust LDO
SM208550337	1	IC Volt Reg Adj LM337
SM208550821	1	Voltage Monitor MAX821
SM208556138	1	IC Volt Ref 4.096V 0.1% 25ppm
SM208701023	7	IC Temperature Sensor
SM208909850	1	DDS-125MHZ Cmos Synth AD9850
SM227110161	1	16 BIT MICROCONTROLLER C161PI
SM229020150	3	MLC Trans Volt Suppressor
SM232022824	1	Diode Array Schottky HSMS2824
SM232030001	6	Diode Array Schottky HSMS-282C
SM232442828	3	Diode Bridge HSMS2828
SM236030099	9	Diode SO-Pkg BAV99
SM252005303	6	Pin Diode Bar 63-03W
SM252023066	12	Pin Diode Bar 66
SM252023304	3	Dual Pin Diode Silicon Bar 63-
SM256232013	1	Diode Light Emitting Red
SM270050520	9	NPN 9GHZ Wideband Transistor
SM270130092	6	Transistor Npn BFR92A
SM270330848	2	Transistor Npn BC848C
SM275030550	3	Transistor Pnp BF550
SM275132907	1	Transistor Pnp 2907A
SM280122416	3	Trans. Jfet N MMBF4416/LC6A
SM280217505	2	Mosfet Nchanel 75A 50V D2P
SM281115003	4	P-CH Hdtmos Pwr E-Fet MTB50P03
SM289772003	3	Transistor Array 2003
SM300092390	1	Inductor Wound 2% 39 NH
SM300295082	16	Inductor 8.2 NH 5%
SM300600009	2	Inductor 9.3uH 7.2A Wound
SM300600012	2	Inductor 150nH 5% Wound
SM301001001	16	BEAD FERRITE
SM301001002	6	Bead SHF 0.3A
SM301001016	4	Inductor Pwr Toroid 272uH .36A
SM301001017	3	Inductor Chip 10% 15uH 1210
SM301001018	1	Inductor Shielded 100uH 10%
SM301004001	34	Bead Ferrite 50 Ohms 3AMPS 120
SM311000005	1	Crystal Oscillator 16 MHz 3.3V
SM311000006	1	Voltage Controlled Oscillator
SM311000013	1	Crystal Osc TCXO 10MHz
SM430530001	12	Relay Smd Dual Form C 5V
SM431030005	3	Relay SPDT HF 50 Ohm 4.5V

902601-00: WR 6051A 500 MHz 5 GS/s 2 Ch Acq Board (con't)

Part Number	Qty	Description
SM433695250	2	PTC Resettable Device 2.5A
SM453005001	3	Header 1 x 5 Shrouded
SM507000002	2	Heatsink Surface Mount TO-263
SM651081102	8	Res Chip 0.1% 1 Kohm
SM652000005	6	Res RF 100 Ohm .25% 1/3W 1206
SM652041000	49	Res Zero ohms
SM652041011	36	Res Chip 1% 49.9 Ohms
SM652041200	7	Res 20 Ohms +/-1% 1/16W 0402 S
SM652041750	1	Res 75 OHM +/-1% 1/16W
SM652061000	6	Res Chip 0 Ohm Jumper
SM652061000	7	Res Chip 0 Ohm Jumper
SM652061100	6	Res Chip 1% 10.0 Ohm .063W
SM652061100	14	Res Chip 1% 10.0 Ohm .063W
SM652061101	6	Res Chip 1% 100 Ohm .063W
SM652061101	3	Res Chip 1% 100 Ohm .063W
SM652061101	8	Res Chip 1% 100 Ohm .063W
SM652061102	10	Res Chip 1% 1.0K Ohm .063W
SM652061102	23	Res Chip 1% 1.0K Ohm .063W
SM652061102	3	Res Chip 1% 1.0K Ohm .063W
SM652061103	11	Res Chip 1% 10K Ohm .063W
SM652061103	6	Res Chip 1% 10K Ohm .063W
SM652061105	3	Res Chip 1% 1.0M Ohm .063W
SM652061105	1	Res Chip 1% 1.0M Ohm .063W
SM652061106	3	Res Chip 1% 10M Ohm .063W
SM652061112	6	Res Chip 1% 1.1K Ohm .063W
SM652061121	48	Res Chip 1% 120 Ohm .063W
SM652061121	9	Res Chip 1% 120 Ohm .063W
SM652061133	4	Res Chip 1% 13K Ohm .063W
SM652061154	3	Res Chip 1% 150K Ohm .063W
SM652061161	9	Res Chip 1% 160 Ohm .063W
SM652061200	1	Res Chip 1% 20.0 Ohm .063W
SM652061201	8	Res Chip 1% 200 Ohm .063W
SM652061201	1	Res Chip 1% 200 Ohm .063W
SM652061201	3	Res Chip 1% 200 Ohm .063W
SM652061203	7	Res Chip 1% 20K Ohm .063W
SM652061221	18	Res Chip 1% 220 Ohm .063W
SM652061222	2	Res Chip 1% 2.2K Ohm .063W
SM652061222	2	Res Chip 1% 2.2K Ohm .063W
SM652061222	3	Res Chip 1% 2.2K Ohm .063W
SM652061240	3	Res Chip 1% 24.0 Ohm .063W
SM652061240	1	Res Chip 1% 24.0 Ohm .063W
SM652061271	12	Res Chip 1% 270 Ohm .063W
SM652061271	4	Res Chip 1% 270 Ohm .063W

902601-00: WR 6051A 500 MHz 5 GS/s 2 Ch Acq Board (con't)

Part Number	Qty	Description
SM652061271	6	Res Chip 1% 270 Ohm .063W
SM652061271	2	Res Chip 1% 270 Ohm .063W
SM652061273	12	Res Chip 1% 27K Ohm .063W
SM652061273	5	Res Chip 1% 27K Ohm .063W
SM652061332	2	Res Chip 1% 3.3K Ohm .063W
SM652061332	5	Res Chip 1% 3.3K Ohm .063W
SM652061334	1	Res Chip 1% 330K Ohm .063W
SM652061361	9	Res Chip 1% 360 Ohm .063W
SM652061361	3	Res Chip 1% 360 Ohm .063W
SM652061361	3	Res Chip 1% 360 Ohm .063W
SM652061390	25	Res Chip 1% 39.0 Ohm .063W
SM652061390	3	Res Chip 1% 39.0 Ohm .063W
SM652061393	3	Res Chip 1% 39K Ohm .063W
SM652061393	1	Res Chip 1% 39K Ohm .063W
SM652061393	3	Res Chip 1% 39K Ohm .063W
SM652061394	3	Res Chip 1% 390K Ohm .063W
SM652061430	6	Res Chip 1% 43.2 Ohm .063W
SM652061431	1	Res Chip 1% 430 Ohm .063W
SM652061432	4	Res Chip 1% 4.3K Ohm .063W
SM652061471	3	Res Chip 1% 470 Ohm .063W
SM652061510	1	Res Chip 1% 51.0 Ohm .063W
SM652061510	3	Res Chip 1% 51.0 Ohm .063W
SM652061510	15	Res Chip 1% 51.0 Ohm .063W
SM652061510	12	Res Chip 1% 51.0 Ohm .063W
SM652061511	6	Res Chip 1% 510 Ohm .063W
SM652061512	3	Res Chip 1% 5.1K Ohm .063W
SM652061513	5	Res Chip 1% 51K Ohm .063W
SM652061562	3	Res Chip 1% 5.6K Ohm .063W
SM652061680	3	Res Chip 1% 68.0 Ohm .063W
SM652061681	1	Res Chip 1% 681 Ohm .063W
SM652061681	3	Res Chip 1% 681 Ohm .063W
SM652061751	3	Res Chip 1% 750 Ohm .063W
SM652061751	1	Res Chip 1% 750 Ohm .063W
SM652061824	3	Res Chip 1% 820K Ohm .063W
SM652061912	3	Res Chip 1% 9.1K Ohm .063W
SM652069393	6	Res Chip (E24) .1% 39K
SM652101101	1	Res Chip (E24) 1% 100 Ohm
SM652101302	1	Res Chip (E24) 1% 3 K
SM652101395	3	Res Chip (E24) 1% 3.9 M
SM653041297	5	RES CHIP 1% 100 OHMS 0402
SM653101226	1	Res Chip 1% 18.2 Ohms
SM653101262	5	Res Chip 1% 43.2 Ohms
SM653101277	7	Res Chip 1% 61.9 Ohms
SM653101285	5	Res Chip 1 % 75.0 Ohms

902601-00: WR 6051A 500 MHz 5 GS/s 2 Ch Acq Board (con't)

Part Number	Qty	Description
SM653101297	18	Res Chip 1% 100 Ohms
SM653101322	17	Res Chip 1% 182 Ohms
SM653101326	7	Res Chip 1% 200 Ohms
SM653101334	7	Res Chip 1% 243 Ohms
SM653101347	1	Res Chip 1% 332 Ohms
SM653101354	16	Res Chip 1% 392 Ohms
SM653101377	7	Res Chip 1% 681 Ohms
SM653101393	33	Res Chip 1% 1.00 K
SM653101397	1	Res Chip 1% 1.10 K
SM653101401	4	Res Chip 1% 1.21 K
SM653101410	15	Res Chip 1% 1.50 K
SM653101422	33	Res Chip 1% 2.00 K
SM653101422	16	Res Chip 1% 2.00 K
SM653101426	9	Res Chip 1 % 2.21K
SM653101430	3	Res Chip 1% 2.43 K
SM653101435	2	Res Chip 1% 2.74 K
SM653101458	10	Res Chip 1 % 4.75 K
SM653101461	8	Res Chip 1% 5.11 K
SM653101469	1	Res Chip 1% 6.19 K
SM653101477	13	Res Chip 1% 7.50 K
SM653101489	20	Res Chip 1 % 10.0 K
SM653101489	2	Res Chip 1 % 10.0 K
SM653101506	5	Res Chip 1% 15.0 K
SM653101518	7	Res Chip 1% 20.0 K
SM653101539	8	Res Chip 1% 33.2 K
SM653101589	9	Res Chip 1% 110 K
SM653185193	1	Res Thick Film 9.09 Ohms
SM654101000	11	Chip Jumper Zero Ohms
SM654101000	11	Chip Jumper Zero Ohms
SM654101000	1	Chip Jumper Zero Ohms
SM655020002	6	RES CHIP 1% 174 OHMS
SM655020017	18	Res Thk Film 1% 1K Ohm 1/16W
SM655020025	10	Res Thk Film 1% 2.74 Ohm 1/16W
SM655020031	6	Res Thk Film 1% 8.25 Ohm 1/16W
SM655030040	6	Res Thk Film +/-1% 5.11 Ohm .1
SM655030042	3	Res Thk Film 1% 5.6M Ohm 1/16W
SM655040022	3	Res Chip .5% 50ppm 180K 150V
SM655040023	3	Res Chip .5% 50ppm 240K 150V
SM655040024	24	Res Chip .5% 50ppm 300K 150V
SM655040025	6	Res Chip .5% 50ppm 110K 150V
SM655040026	1	Res Thk Film 41.2 Ohm .5% 1/8W
SM655040027	2	Res Thk Film 20 Ohm .5% 1/8W
SM655063001	2	Res Thk Film 5% 1.5 Ohms 1/8W

902601-00: WR 6051A 500 MHz 5 GS/s 2 Ch Acq Board (con't)

Part Number	Qty	Description
SM655080004	3	Res Thk Film 1 Ohm +/- 5% 1/2W
SM655080005	8	Res Thk Film 1% 105 Ohm 1/2W
SM655080009	1	Res Thk Film 0.5% 41.2 Ohm 1W
SM661010002	6	Cap Cera Chip 27PF +/- 5%
SM661010003	6	Cap Cera Chip 10% 16V 33nF
SM661011001	3	Cap Cera Chip 3.9pF 200V
SM661028100	1	Cap Cera Chip 1UF 10V
SM661028100	9	Cap Cera Chip 1UF 10V
SM661066102	52	Cap Cera Chip 10% 1000PF/50V
SM661066102	13	Cap Cera Chip 10% 1000PF/50V
SM661068104	72	Cap Cera Chip 0.1uF 0603
SM661068104	3	Cap Cera Chip 0.1uF 0603
SM661068104	21	Cap Cera Chip 0.1uF 0603
SM661073020	3	Cap Cera 2.0+/- 0.1PF 50V Npo
SM661073056	3	Cap Cera 5.6+/- 0.1PF 50V Npo
SM661073300	3	Cap Cera 30PF+/- 5% 50V Npo
SM661073331	3	Cap Cera 330PF+/- 5% 50V Npo
SM661073820	7	Cap Cera 82PF+/- 5% 50V Npo
SM661165102	3	Cap Cera Chip 1000PF
SM661207103	6	Cap Cera Chip 20% .01 UF
SM661207104	6	Cap Cera Chip 20 % .1 UF
SM661207104	190	Cap Cera Chip 20 % .1 UF
SM661207223	3	Cap Cera Chip 20% .022 UF
SM661255121	3	Cap Cera Chip 5% 120 PF
SM661540056	6	Cap Cera Chip 5.6PF 500V
SM661540068	3	Cap Cera Chip 6.8PF 500V
SM662131003	32	Cap Cera Chip 5% 50V .01 UF
SM662135002	16	Cap Cera +/-.1pF 50V 1.0pF NPO
SM662137004	8	Cap Cera +/-.25% 50V 3.3pF NPO
SM662151001	42	Cap Cera Chip 10% 16V 0.1 UF
SM662152001	10	Cap Cera Chip 10% 16V 100nF
SM662212001	3	Cap Cera .015uF 10% 25V X7R
SM662232001	8	10000pf 0603 capacitor
SM662241001	3	Cap Cera 22pF +/- 5% 100V Npo
SM662252001	3	Cap Cera .068uF 10% 16V X7R
SM662382001	3	Cap Cera 1000pF 10% 500V X7R
SM662432001	1	Cap Cera 4700pF 10% 50V X7R
SM662432002	1	Cap Cera Chip 0.22uF 10% 50V
SM662913001	46	Cap Cera Chip 10uF 20% 25V X5R
SM666267227	18	Cap Tant 220UF 10V 20%
SM668016226	42	Cap tant 22UF/16V 20 % L Esr
SM668025106	2	Cap,tant 10UF/25V 20% L Esr
SM669117001	8	Inductor Chip 2.2uH 20% 350mA
SM669854001	2	Inductor Chip 15uH 15% 2.97A

7.28 902602-00: WR 6050A 500 MHz 5 GS/s 4 Ch Acquisition Board

Part Number	Qty	Description
335970001	1	Probe Hook
402120004	1	Conn RT Angle Fem Bnc
416162005	1	Switch R/A PCB Mtg SPDT MOM
430500003	4	20DB Attenuator Relay DC-3GHZ
454000018	1	Hdr Sold Tail Male 18 Pin HI T
454004002	1	Conn Receptacle USB R/A 4 Pos
454016002	1	Conn Hdr Vert 16 Pos Wire-BD
454022001	1	HEADER VERT 22 POS WIRE BD
454040003	2	Conn Hdr Vert 40-Pos Male Shrd
454117003	4	Friction Header Straight .1 CE
454312010	4	Hdr Sold Tail/Male 10
469040002	1	Metal Banana Jack/Binding Post
522632120	6	Standoff Hex 6-32X5/8 F/F
524632015	4	Standoff Hex 6-32 X 1/2 FF
550011106	10	Screw Pan HD M2X6 Blk W/Nylock
551620100	10	#2 Flat Washer S.steel/Black O
555465002	1	Washer Lock Split 1/4
561632405	16	Screw TX Pan #6-32UNC 5/16" S1
590441024	0.07	Wire Teflon 7/32 Yel 24
594120006	2	Tiewrap
709614300	5	Bulkhead Receptical Female Bnc
709614301	5	BNC Lock Washer
709614302	5	BNC Nut
7093XXP01	5	Right Angle Recept. Connector
7093XXP41	5	Probe Holder
7093XXP91	5	Probe Ring Contact
901140-00	4	Chip Atten. 3dB .5% Trim Res
901336-00	1	Heatsink WaveRunner MST/MTB
901436-00	1	WaveRunner Front Card Panel Assy Upda
901437-00	2	Heatsink Base - HAD
901440-00	1	Heatsink Base mst/mtb
901441-00	1	Heatsink clip mst-mtb
901622-00	1	EMI shield - 10 GHZ clock
901685-00	5	Upper front end EMI shield
901686-00	5	Lower front end EMI shield
901693-00	1	Gap pad MST die cut
901694-00	1	Gap pad HTB die cut
901709-00	5	Malico 30mm heat sink assy
901790-00	2	WaveRunner CLOCK EMI SHIELD 0.4 IN. H
901807-00	1	ALUM. SPACER
901835-00	1	CABLE WaveRunner 10GHz MTB COAX
901835-01	1	CABLE WaveRunner 10GHz CH1 COAX
901835-02	1	CABLE WaveRunner 10GHz CH3 COAX

902602-00: WR 6050A 500 MHz 5 GS/s 4 Ch Acq Board (con't)

Part Number	Qty	Description
901882-00	1	Waverunner Acq. PCB
902138-00	2	Die cut GDS material with adhe
902463-00	2	WaveRunner Backbone
902528-00	6	Thermal Gap Pad Die-Cut
902530-00	2	Integrated Chip Cooler
CH599012012	0.1	5-Minute Epoxy
CH599041022	1	Heat Sink Compound 251
HAD639C-02	2	Packaged MAD440E 10GS/s SiGe
HFE653B	5	Front End Amplifier
HTB645	1	Hybrid Pkgd Timebase Trigger
MAM439	6	Monolithic 8 Megabyte Dram Mem
MST429A	1	IC Smart Trigger Gate-Array
SM158021002	10	Cap Variable 0.5-2.5pF 250V
SM158070200	10	Cap Variable 4.5-20.0 PF
SM185457102	5	Res Vari Cermet 1 K
SM185457201	1	Res Vari Cermet 200 Ohms
SM185457503	5	Res Vari Cermet 50 K
SM200180032	1	IC 2-in OR Gate 74VHC1G32
SM200588014	1	Hex Schmitt-Trig Inv 74HCT14
SM201274033	1	IC Ecl Divide BY 4 MC10EL33
SM201570016	2	IC Ecl Diff Receiver 10EL16D
SM201774025	3	Diff Ecl-Ttl Transl 10ELT25
SM202057002	1	IC Triple 2-CH Analog Mux
SM202059003	1	ECL Diff Rec/Driv w/Enable Out
SM202100004	1	IC PLL Freq Synth 4106 6 GHz
SM202102001	1	IC ECL /PECL 1:5 DIFF CLK DRVR
SM202107002	1	100EP57 4:1 MUX
SM205129160	1	IC FLASH MEM 16 MBIT HY29LV160
SM205200002	1	IC 8M x 8 Bit 133MHz SDRAM
SM205616001	5	IC 8-Bit Shift Reg 74LV594ADR
SM205625616	1	IC 256K X 16 CMOS SRAM
SM205715003	2	IC PAL FG456 Fine-Pitch BGA
SM206178125	1	IC Quad Bfr Line Drvr 3 State
SM206370024	3	IC Ttl TO Diff Ecl Transl MC10
SM207010002	3	IC CMOS 8 BIT LOW RES BUS SWIT
SM207010011	2	IC Quad 10-Bit DAC LTC1664
SM207010014	1	16 Bit Buffer/Driver 3-State
SM207131660	1	IC Dac Octal 10BIT Serial Unip
SM207231654	4	IC Dual 14-Bit Serial Dac
SM207770442	5	IC Analog Switch DG442
SM207944351	5	OCTAL ANALOG MUX/DEMUX 74HCT43
SM208400001	3	IC MMIC Amplifier 12GHz NBB-30
SM208400002	1	IC MMIC Amplifier 8GHz NBB-400
SM208470353	8	IC Dual OP Amp LF353

902602-00: WR 6050A 500 MHz 5 GS/s 4 Ch Acq Board (con't)

Part Number	Qty	Description
SM208470656	5	IC FET-Input OP Amp OPA656U
SM208470705	11	IC OP Amp Picoamp Input AD705
SM208472022	7	Opamp, Dual, Low Pwr TLE2022C
SM208475460	5	IC OP Amp Sin-Sup RtoR Ins Amp
SM208476482	2	IC Dual OP Amp Rail TO Rail 64
SM208550004	8	IC Volt Reg Pos Adjust LDO
SM208550337	1	IC Volt Reg Adj LM337
SM208550821	1	Voltage Monitor MAX821
SM208556138	1	IC Volt Ref 4.096V 0.1% 25ppm
SM208701023	11	IC Temperature Sensor
SM208909850	1	DDS-125MHZ Cmos Synth AD9850
SM227110161	1	16 BIT MICROCONTROLLER C161PI
SM229020150	5	MLC Trans Volt Suppressor
SM232022824	1	Diode Array Schottky HSMS2824
SM232030001	10	Diode Array Schottky HSMS-282C
SM232442828	5	Diode Bridge HSMS2828
SM236030099	11	Diode SO-Pkg BAV99
SM252005303	10	Pin Diode Bar 63-03W
SM252023066	20	Pin Diode Bar 66
SM252023304	5	Dual Pin Diode Silicon Bar 63-
SM256232013	1	Diode Light Emitting Red
SM270050520	15	NPN 9GHZ Wideband Transistor
SM270130092	6	Transistor Npn BFR92A
SM270330848	2	Transistor Npn BC848C
SM275030550	5	Transistor Pnp BF550
SM275132907	1	Transistor Pnp 2907A
SM280122416	5	Trans. Jfet N MMBF4416/LC6A
SM280217505	2	Mosfet Nchanel 75A 50V D2P
SM281115003	4	P-CH Hdtmos Pwr E-Fet MTB50P03
SM289772003	5	Transistor Array 2003
SM300092390	1	Inductor Wound 2% 39 NH
SM300295082	28	Inductor 8.2 NH 5%
SM300600009	2	Inductor 9.3uH 7.2A Wound
SM300600012	2	Inductor 150nH 5% Wound
SM301001001	16	BEAD FERRITE
SM301001002	6	Bead SHF 0.3A
SM301001016	4	Inductor Pwr Toroid 272uH .36A
SM301001017	3	Inductor Chip 10% 15uH 1210
SM301001018	1	Inductor Shielded 100uH 10%
SM301004001	40	Bead Ferrite 50 Ohms 3AMPS 120
SM311000005	1	Crystal Oscillator 16 MHz 3.3V
SM311000006	1	Voltage Controlled Oscillator
SM311000013	1	Crystal Osc TCXO 10MHz

902602-00: WR 6050A 500 MHz 5 GS/s 4 Ch Acq Board (con't)

Part Number	Qty	Description
SM430530001	20	Relay Smd Dual Form C 5V
SM431030005	5	Relay SPDT HF 50 Ohm 4.5V
SM433695250	2	PTC Resettable Device 2.5A
SM453005001	3	Header 1 x 5 Shrouded
SM507000002	2	Heatsink Surface Mount TO-263
SM651081102	8	Res Chip 0.1% 1 Kohm
SM652000005	10	Res RF 100 Ohm .25% 1/3W 1206
SM652041000	49	Res Zero ohms
SM652041011	52	Res Chip 1% 49.9 Ohms
SM652041200	11	Res 20 Ohms +/-1% 1/16W 0402 S
SM652041750	1	Res 75 OHM +/-1% 1/16W
SM652061000	11	Res Chip 0 Ohm Jumper
SM652061000	10	Res Chip 0 Ohm Jumper
SM652061100	20	Res Chip 1% 10.0 Ohm .063W
SM652061100	10	Res Chip 1% 10.0 Ohm .063W
SM652061101	10	Res Chip 1% 100 Ohm .063W
SM652061101	12	Res Chip 1% 100 Ohm .063W
SM652061101	3	Res Chip 1% 100 Ohm .063W
SM652061102	5	Res Chip 1% 1.0K Ohm .063W
SM652061102	16	Res Chip 1% 1.0K Ohm .063W
SM652061102	23	Res Chip 1% 1.0K Ohm .063W
SM652061103	19	Res Chip 1% 10K Ohm .063W
SM652061103	6	Res Chip 1% 10K Ohm .063W
SM652061105	1	Res Chip 1% 1.0M Ohm .063W
SM652061105	5	Res Chip 1% 1.0M Ohm .063W
SM652061106	5	Res Chip 1% 10M Ohm .063W
SM652061112	10	Res Chip 1% 1.1K Ohm .063W
SM652061121	15	Res Chip 1% 120 Ohm .063W
SM652061121	50	Res Chip 1% 120 Ohm .063W
SM652061133	4	Res Chip 1% 13K Ohm .063W
SM652061154	5	Res Chip 1% 150K Ohm .063W
SM652061161	15	Res Chip 1% 160 Ohm .063W
SM652061200	1	Res Chip 1% 20.0 Ohm .063W
SM652061201	5	Res Chip 1% 200 Ohm .063W
SM652061201	14	Res Chip 1% 200 Ohm .063W
SM652061201	1	Res Chip 1% 200 Ohm .063W
SM652061203	11	Res Chip 1% 20K Ohm .063W
SM652061221	18	Res Chip 1% 220 Ohm .063W
SM652061222	2	Res Chip 1% 2.2K Ohm .063W
SM652061222	4	Res Chip 1% 2.2K Ohm .063W
SM652061222	5	Res Chip 1% 2.2K Ohm .063W
SM652061240	5	Res Chip 1% 24.0 Ohm .063W
SM652061240	1	Res Chip 1% 24.0 Ohm .063W
SM652061271	10	Res Chip 1% 270 Ohm .063W

902602-00: WR 6050A 500 MHz 5 GS/s 4 Ch Acq Board (con't)

Part Number	Qty	Description
SM652061271	2	Res Chip 1% 270 Ohm .063W
SM652061271	4	Res Chip 1% 270 Ohm .063W
SM652061271	20	Res Chip 1% 270 Ohm .063W
SM652061273	5	Res Chip 1% 27K Ohm .063W
SM652061273	20	Res Chip 1% 27K Ohm .063W
SM652061332	5	Res Chip 1% 3.3K Ohm .063W
SM652061332	4	Res Chip 1% 3.3K Ohm .063W
SM652061334	1	Res Chip 1% 330K Ohm .063W
SM652061361	3	Res Chip 1% 360 Ohm .063W
SM652061361	15	Res Chip 1% 360 Ohm .063W
SM652061361	5	Res Chip 1% 360 Ohm .063W
SM652061390	5	Res Chip 1% 39.0 Ohm .063W
SM652061390	41	Res Chip 1% 39.0 Ohm .063W
SM652061393	5	Res Chip 1% 39K Ohm .063W
SM652061393	1	Res Chip 1% 39K Ohm .063W
SM652061393	5	Res Chip 1% 39K Ohm .063W
SM652061394	5	Res Chip 1% 390K Ohm .063W
SM652061430	10	Res Chip 1% 43.2 Ohm .063W
SM652061431	1	Res Chip 1% 430 Ohm .063W
SM652061432	6	Res Chip 1% 4.3K Ohm .063W
SM652061471	5	Res Chip 1% 470 Ohm .063W
SM652061510	12	Res Chip 1% 51.0 Ohm .063W
SM652061510	25	Res Chip 1% 51.0 Ohm .063W
SM652061510	5	Res Chip 1% 51.0 Ohm .063W
SM652061511	6	Res Chip 1% 510 Ohm .063W
SM652061512	5	Res Chip 1% 5.1K Ohm .063W
SM652061513	5	Res Chip 1% 51K Ohm .063W
SM652061562	5	Res Chip 1% 5.6K Ohm .063W
SM652061680	5	Res Chip 1% 68.0 Ohm .063W
SM652061681	1	Res Chip 1% 681 Ohm .063W
SM652061681	5	Res Chip 1% 681 Ohm .063W
SM652061751	1	Res Chip 1% 750 Ohm .063W
SM652061751	5	Res Chip 1% 750 Ohm .063W
SM652061824	5	Res Chip 1% 820K Ohm .063W
SM652061912	5	Res Chip 1% 9.1K Ohm .063W
SM652069393	10	Res Chip (E24) .1% 39K
SM652101101	2	Res Chip (E24) 1% 100 Ohm
SM652101302	1	Res Chip (E24) 1% 3 K
SM652101395	5	Res Chip (E24) 1% 3.9 M
SM653041297	5	RES CHIP 1% 100 OHMS 0402
SM653101226	1	Res Chip 1% 18.2 Ohms
SM653101262	9	Res Chip 1% 43.2 Ohms
SM653101277	7	Res Chip 1% 61.9 Ohms
SM653101285	5	Res Chip 1 % 75.0 Ohms

902602-00: WR 6050A 500 MHz 5 GS/s 4 Ch Acq Board (con't)

Part Number	Qty	Description
SM653101297	19	Res Chip 1% 100 Ohms
SM653101322	17	Res Chip 1% 182 Ohms
SM653101326	7	Res Chip 1% 200 Ohms
SM653101334	8	Res Chip 1% 243 Ohms
SM653101347	1	Res Chip 1% 332 Ohms
SM653101354	16	Res Chip 1% 392 Ohms
SM653101377	7	Res Chip 1% 681 Ohms
SM653101393	33	Res Chip 1% 1.00 K
SM653101397	1	Res Chip 1% 1.10 K
SM653101401	4	Res Chip 1% 1.21 K
SM653101410	16	Res Chip 1% 1.50 K
SM653101422	33	Res Chip 1% 2.00 K
SM653101422	4	Res Chip 1% 2.00 K
SM653101422	12	Res Chip 1% 2.00 K
SM653101426	9	Res Chip 1 % 2.21K
SM653101430	3	Res Chip 1% 2.43 K
SM653101435	2	Res Chip 1% 2.74 K
SM653101458	10	Res Chip 1 % 4.75 K
SM653101461	8	Res Chip 1% 5.11 K
SM653101469	1	Res Chip 1% 6.19 K
SM653101477	13	Res Chip 1% 7.50 K
SM653101489	20	Res Chip 1 % 10.0 K
SM653101489	4	Res Chip 1 % 10.0 K
SM653101506	5	Res Chip 1% 15.0 K
SM653101518	7	Res Chip 1% 20.0 K
SM653101539	8	Res Chip 1% 33.2 K
SM653101589	9	Res Chip 1% 110 K
SM653185193	1	Res Thick Film 9.09 Ohms
SM654101000	9	Chip Jumper Zero Ohms
SM654101000	12	Chip Jumper Zero Ohms
SM655020002	10	RES CHIP 1% 174 OHMS
SM655020017	30	Res Thk Film 1% 1K Ohm 1/16W
SM655020025	18	Res Thk Film 1% 2.74 Ohm 1/16W
SM655020031	10	Res Thk Film 1% 8.25 Ohm 1/16W
SM655030040	10	Res Thk Film +/-1% 5.11 Ohm .1
SM655030042	5	Res Thk Film 1% 5.6M Ohm 1/16W
SM655040022	5	Res Chip .5% 50ppm 180K 150V
SM655040023	5	Res Chip .5% 50ppm 240K 150V
SM655040024	40	Res Chip .5% 50ppm 300K 150V
SM655040025	10	Res Chip .5% 50ppm 110K 150V
SM655040026	1	Res Thk Film 41.2 Ohm .5% 1/8W
SM655040027	2	Res Thk Film 20 Ohm .5% 1/8W
SM655063001	2	Res Thk Film 5% 1.5 Ohms 1/8W
SM655080004	5	Res Thk Film 1 Ohm +/- 5% 1/2W

902602-00: WR 6050A 500 MHz 5 GS/s 4 Ch Acq Board (con't)

Part Number	Qty	Description
SM655080005	8	Res Thk Film 1% 105 Ohm 1/2W
SM655080009	1	Res Thk Film 0.5% 41.2 Ohm 1W
SM661010002	10	Cap Cera Chip 27PF +/- 5%
SM661010003	10	Cap Cera Chip 10% 16V 33nF
SM661011001	5	Cap Cera Chip 3.9pF 200V
SM661028100	15	Cap Cera Chip 1UF 10V
SM661028100	1	Cap Cera Chip 1UF 10V
SM661066102	88	Cap Cera Chip 10% 1000PF/50V
SM661066102	17	Cap Cera Chip 10% 1000PF/50V
SM661068104	5	Cap Cera Chip 0.1uF 0603
SM661068104	120	Cap Cera Chip 0.1uF 0603
SM661068104	21	Cap Cera Chip 0.1uF 0603
SM661073020	5	Cap Cera 2.0+/- 0.1PF 50V Npo
SM661073056	5	Cap Cera 5.6+/- 0.1PF 50V Npo
SM661073300	5	Cap Cera 30PF+/- 5% 50V Npo
SM661073331	3	Cap Cera 330PF+/- 5% 50V Npo
SM661073820	7	Cap Cera 82PF+/- 5% 50V Npo
SM661165102	3	Cap Cera Chip 1000PF
SM661207103	6	Cap Cera Chip 20% .01 UF
SM661207104	10	Cap Cera Chip 20 % .1 UF
SM661207104	218	Cap Cera Chip 20 % .1 UF
SM661207223	5	Cap Cera Chip 20% .022 UF
SM661255015	1	Cap Cera Chip 1.5 PF
SM661255121	3	Cap Cera Chip 5% 120 PF
SM661540056	10	Cap Cera Chip 5.6PF 500V
SM661540068	5	Cap Cera Chip 6.8PF 500V
SM662131003	48	Cap Cera Chip 5% 50V .01 UF
SM662135002	28	Cap Cera +/-.1pF 50V 1.0pF NPO
SM662137004	14	Cap Cera +/-.25% 50V 3.3pF NPO
SM662151001	42	Cap Cera Chip 10% 16V 0.1 UF
SM662152001	18	Cap Cera Chip 10% 16V 100nF
SM662212001	5	Cap Cera .015uF 10% 25V X7R
SM662232001	8	10000pf 0603 capacitor
SM662241001	5	Cap Cera 22pF +/- 5% 100V Npo
SM662252001	5	Cap Cera .068uF 10% 16V X7R
SM662382001	5	Cap Cera 1000pF 10% 500V X7R
SM662432001	1	Cap Cera 4700pF 10% 50V X7R
SM662432002	1	Cap Cera Chip 0.22uF 10% 50V
SM662913001	63	Cap Cera Chip 10uF 20% 25V X5R
SM666267227	24	Cap Tant 220UF 10V 20%
SM668016226	48	Cap tant 22UF/16V 20 % L Esr
SM668025106	2	Cap,tant 10UF/25V 20% L Esr
SM669117001	12	Inductor Chip 2.2uH 20% 350mA
SM669854001	2	Inductor Chip 15uH 15% 2.97A

7.29 902603-00: WR 6100A 1 GHz 5 GS/s 4 Ch Acquisition Board

Part Number	Qty	Description
335970001	1	Probe Hook
402120004	1	Conn RT Angle Fem Bnc
416162005	1	Switch R/A PCB Mtg SPDT MOM
430500003	4	20DB Attenuator Relay DC-3GHZ
454000018	1	Hdr Sold Tail Male 18 Pin HI T
454004002	1	Conn Receptacle USB R/A 4 Pos
454016002	1	Conn Hdr Vert 16 Pos Wire-BD
454022001	1	HEADER VERT 22 POS WIRE BD
454040003	2	Conn Hdr Vert 40-Pos Male Shrd
454117003	4	Friction Header Straight .1 CE
454312010	4	Hdr Sold Tail/Male 10
469040002	1	Metal Banana Jack/Binding Post
522632120	6	Standoff Hex 6-32X5/8 F/F
524632015	4	Standoff Hex 6-32 X 1/2 FF
550011106	10	Screw Pan HD M2X6 Blk W/Nylock
551620100	10	#2 Flat Washer S.steel/Black O
555465002	1	Washer Lock Split 1/4
561632405	16	Screw TX Pan #6-32UNC 5/16" S1
590441024	0.07	Wire Teflon 7/32 Yel 24
594120006	2	Tiewrap
709614300	5	Bulkhead Receptical Female Bnc
709614301	5	BNC Lock Washer
709614302	5	BNC Nut
7093XXP01	5	Right Angle Recept. Connector
7093XXP41	5	Probe Holder
7093XXP91	5	Probe Ring Contact
901140-00	4	Chip Atten. 3dB .5% Trim Res
901336-00	1	Heatsink WaveRunner MST/MTB
901436-00	1	WaveRunner Front Card Panel Assy Upda
901437-00	2	Heatsink Base - HAD
901440-00	1	Heatsink Base mst/mtb
901441-00	1	Heatsink clip mst-mtb
901622-00	1	EMI shield - 10 GHZ clock
901685-00	5	Upper front end EMI shield
901686-00	5	Lower front end EMI shield
901693-00	1	Gap pad MST die cut
901694-00	1	Gap pad HTB die cut
901709-00	5	Malico 30mm heat sink assy
901790-00	2	WaveRunner CLOCK EMI SHIELD 0.4 IN. H
901807-00	1	ALUM. SPACER
901835-00	1	CABLE WaveRunner 10GHz MTB COAX
901835-01	1	CABLE WaveRunner 10GHz CH1 COAX
901835-02	1	CABLE WaveRunner 10GHz CH3 COAX
901882-00	1	Waverunner Acq. PCB

902603-00: WR 6100A 1 GHz 5 GS/s 4 Ch Acq Board (con't)

Part Number	Qty	Description
902138-00	2	Die cut GDS material with adhe
902463-00	2	WaveRunner Backbone
902528-00	6	Thermal Gap Pad Die-Cut
902530-00	2	Integrated Chip Cooler
CH599012012	0.1	5-Minute Epoxy
CH599041022	1	Heat Sink Compound 251
HAD639C-02	2	Packaged MAD440E 10GS/s SiGe
HFE653B	5	Front End Amplifier
HTB645	1	Hybrid Pkgd Timebase Trigger
MAM439	6	Monolithic 8 Megabyte Dram Mem
MST429A	1	IC Smart Trigger Gate-Array
Part Number	NetQty	ItemDesc
SM158021002	10	Cap Variable 0.5-2.5pF 250V
SM158070200	10	Cap Variable 4.5-20.0 PF
SM185457102	5	Res Vari Cermet 1 K
SM185457201	1	Res Vari Cermet 200 Ohms
SM185457503	5	Res Vari Cermet 50 K
SM200180032	1	IC 2-in OR Gate 74VHC1G32
SM200588014	1	Hex Schmitt-Trig Inv 74HCT14
SM201274033	1	IC Ecl Divide BY 4 MC10EL33
SM201570016	2	IC Ecl Diff Receiver 10EL16D
SM201774025	3	Diff Ecl-Ttl Transl 10ELT25
SM202057002	1	IC Triple 2-CH Analog Mux
SM202059003	1	ECL Diff Rec/Driv w/Enable Out
SM202100004	1	IC PLL Freq Synth 4106 6 GHz
SM202102001	1	IC ECL /PECL 1:5 DIFF CLK DRVR
SM202107002	1	100EP57 4:1 MUX
SM205129160	1	IC FLASH MEM 16 MBIT HY29LV160
SM205200002	1	IC 8M x 8 Bit 133MHz SDRAM
SM205616001	5	IC 8-Bit Shift Reg 74LV594ADR
SM205625616	1	IC 256K X 16 CMOS SRAM
SM205715003	2	IC PAL FG456 Fine-Pitch BGA
SM206178125	1	IC Quad Bfr Line Drvr 3 State
SM206370024	3	IC Ttl TO Diff Ecl Transl MC10
SM207010002	3	IC CMOS 8 BIT LOW RES BUS SWIT
SM207010011	2	IC Quad 10-Bit DAC LTC1664
SM207010014	1	16 Bit Buffer/Driver 3-State
SM207131660	1	IC Dac Octal 10BIT Serial Unip
SM207231654	4	IC Dual 14-Bit Serial Dac
SM207770442	5	IC Analog Switch DG442
SM207944351	5	OCTAL ANALOG MUX/DEMUX 74HCT43
SM208400001	3	IC MMIC Amplifier 12GHz NBB-30
SM208400002	1	IC MMIC Amplifier 8GHz NBB-400
SM208470353	8	IC Dual OP Amp LF353

902603-00: WR 6100A 1 GHz 5 GS/s 4 Ch Acq Board (con't)

Part Number	Qty	Description
SM208470656	5	IC FET-Input OP Amp OPA656U
SM208470705	11	IC OP Amp Picoamp Input AD705
SM208472022	7	Opamp, Dual, Low Pwr TLE2022C
SM208475460	5	IC OP Amp Sin-Sup RtoR Ins Amp
SM208476482	2	IC Dual OP Amp Rail TO Rail 64
SM208550004	8	IC Volt Reg Pos Adjust LDO
SM208550337	1	IC Volt Reg Adj LM337
SM208550821	1	Voltage Monitor MAX821
SM208556138	1	IC Volt Ref 4.096V 0.1% 25ppm
SM208701023	11	IC Temperature Sensor
SM208909850	1	DDS-125MHZ Cmos Synth AD9850
SM227110161	1	16 BIT MICROCONTROLLER C161PI
SM229020150	5	MLC Trans Volt Suppressor
SM232022824	1	Diode Array Schottky HSMS2824
SM232030001	10	Diode Array Schottky HSMS-282C
SM232442828	5	Diode Bridge HSMS2828
SM236030099	11	Diode SO-Pkg BAV99
SM252005303	10	Pin Diode Bar 63-03W
SM252023066	20	Pin Diode Bar 66
SM252023304	5	Dual Pin Diode Silicon Bar 63-
SM256232013	1	Diode Light Emitting Red
SM270050520	15	NPN 9GHZ Wideband Transistor
SM270130092	6	Transistor Npn BFR92A
SM270330848	2	Transistor Npn BC848C
SM275030550	5	Transistor Pnp BF550
SM275132907	1	Transistor Pnp 2907A
SM280122416	5	Trans. Jfet N MMBF4416/LC6A
SM280217505	2	Mosfet Nchanel 75A 50V D2P
SM281115003	4	P-CH Hdtmos Pwr E-Fet MTB50P03
SM289772003	5	Transistor Array 2003
SM300092390	1	Inductor Wound 2% 39 NH
SM300295082	28	Inductor 8.2 NH 5%
SM300600009	2	Inductor 9.3uH 7.2A Wound
SM300600012	2	Inductor 150nH 5% Wound
SM301001001	16	BEAD FERRITE
SM301001002	6	Bead SHF 0.3A
SM301001016	4	Inductor Pwr Toroid 272uH .36A
SM301001017	3	Inductor Chip 10% 15uH 1210
SM301001018	1	Inductor Shielded 100uH 10%
SM301004001	40	Bead Ferrite 50 Ohms 3AMPS 120
SM311000005	1	Crystal Oscillator 16 MHz 3.3V
SM311000006	1	Voltage Controlled Oscillator
SM311000013	1	Crystal Osc TCXO 10MHz
SM430530001	20	Relay Smd Dual Form C 5V
SM431030005	5	Relay SPDT HF 50 Ohm 4.5V

902603-00: WR 6100A 1 GHz 5 GS/s 4 Ch Acq Board (con't)

Part Number	Qty	Description
SM433695250	2	PTC Resettable Device 2.5A
SM453005001	3	Header 1 x 5 Shrouded
SM507000002	2	Heatsink Surface Mount TO-263
SM651081102	8	Res Chip 0.1% 1 Kohm
SM652000005	10	Res RF 100 Ohm .25% 1/3W 1206
SM652041000	49	Res Zero ohms
SM652041011	52	Res Chip 1% 49.9 Ohms
SM652041200	11	Res 20 Ohms +/-1% 1/16W 0402 S
SM652041750	1	Res 75 OHM +/-1% 1/16W
SM652061000	11	Res Chip 0 Ohm Jumper
SM652061000	10	Res Chip 0 Ohm Jumper
SM652061100	20	Res Chip 1% 10.0 Ohm .063W
SM652061100	10	Res Chip 1% 10.0 Ohm .063W
SM652061101	10	Res Chip 1% 100 Ohm .063W
SM652061101	12	Res Chip 1% 100 Ohm .063W
SM652061101	3	Res Chip 1% 100 Ohm .063W
SM652061102	5	Res Chip 1% 1.0K Ohm .063W
SM652061102	16	Res Chip 1% 1.0K Ohm .063W
SM652061102	23	Res Chip 1% 1.0K Ohm .063W
SM652061103	19	Res Chip 1% 10K Ohm .063W
SM652061103	6	Res Chip 1% 10K Ohm .063W
SM652061105	1	Res Chip 1% 1.0M Ohm .063W
SM652061105	5	Res Chip 1% 1.0M Ohm .063W
SM652061106	5	Res Chip 1% 10M Ohm .063W
SM652061112	10	Res Chip 1% 1.1K Ohm .063W
SM652061121	15	Res Chip 1% 120 Ohm .063W
SM652061121	50	Res Chip 1% 120 Ohm .063W
SM652061131	5	Res Chip 1% 130 Ohm .063W
SM652061133	4	Res Chip 1% 13K Ohm .063W
SM652061154	5	Res Chip 1% 150K Ohm .063W
SM652061161	15	Res Chip 1% 160 Ohm .063W
SM652061200	1	Res Chip 1% 20.0 Ohm .063W
SM652061201	5	Res Chip 1% 200 Ohm .063W
SM652061201	14	Res Chip 1% 200 Ohm .063W
SM652061201	1	Res Chip 1% 200 Ohm .063W
SM652061203	11	Res Chip 1% 20K Ohm .063W
SM652061221	18	Res Chip 1% 220 Ohm .063W
SM652061222	2	Res Chip 1% 2.2K Ohm .063W
SM652061222	4	Res Chip 1% 2.2K Ohm .063W
SM652061222	5	Res Chip 1% 2.2K Ohm .063W
SM652061240	5	Res Chip 1% 24.0 Ohm .063W
SM652061240	1	Res Chip 1% 24.0 Ohm .063W
SM652061271	10	Res Chip 1% 270 Ohm .063W
SM652061271	2	Res Chip 1% 270 Ohm .063W

902603-00: WR 6100A 1 GHz 5 GS/s 4 Ch Acq Board (con't)

Part Number	Qty	Description
SM652061271	4	Res Chip 1% 270 Ohm .063W
SM652061271	20	Res Chip 1% 270 Ohm .063W
SM652061273	5	Res Chip 1% 27K Ohm .063W
SM652061273	20	Res Chip 1% 27K Ohm .063W
SM652061332	5	Res Chip 1% 3.3K Ohm .063W
SM652061332	4	Res Chip 1% 3.3K Ohm .063W
SM652061334	1	Res Chip 1% 330K Ohm .063W
SM652061361	3	Res Chip 1% 360 Ohm .063W
SM652061361	15	Res Chip 1% 360 Ohm .063W
SM652061361	5	Res Chip 1% 360 Ohm .063W
SM652061390	5	Res Chip 1% 39.0 Ohm .063W
SM652061390	41	Res Chip 1% 39.0 Ohm .063W
SM652061393	5	Res Chip 1% 39K Ohm .063W
SM652061393	1	Res Chip 1% 39K Ohm .063W
SM652061393	5	Res Chip 1% 39K Ohm .063W
SM652061394	5	Res Chip 1% 390K Ohm .063W
SM652061430	10	Res Chip 1% 43.2 Ohm .063W
SM652061431	1	Res Chip 1% 430 Ohm .063W
SM652061432	6	Res Chip 1% 4.3K Ohm .063W
SM652061471	5	Res Chip 1% 470 Ohm .063W
SM652061510	12	Res Chip 1% 51.0 Ohm .063W
SM652061510	25	Res Chip 1% 51.0 Ohm .063W
SM652061510	5	Res Chip 1% 51.0 Ohm .063W
SM652061511	6	Res Chip 1% 510 Ohm .063W
SM652061512	5	Res Chip 1% 5.1K Ohm .063W
SM652061513	5	Res Chip 1% 51K Ohm .063W
SM652061562	5	Res Chip 1% 5.6K Ohm .063W
SM652061681	1	Res Chip 1% 681 Ohm .063W
SM652061681	5	Res Chip 1% 681 Ohm .063W
SM652061751	1	Res Chip 1% 750 Ohm .063W
SM652061751	5	Res Chip 1% 750 Ohm .063W
SM652061824	5	Res Chip 1% 820K Ohm .063W
SM652061912	5	Res Chip 1% 9.1K Ohm .063W
SM652069393	10	Res Chip (E24) .1% 39K
SM652101101	2	Res Chip (E24) 1% 100 Ohm
SM652101302	1	Res Chip (E24) 1% 3 K
SM652101395	5	Res Chip (E24) 1% 3.9 M
SM653041297	5	RES CHIP 1% 100 OHMS 0402
SM653101226	1	Res Chip 1% 18.2 Ohms
SM653101262	9	Res Chip 1% 43.2 Ohms
SM653101277	7	Res Chip 1% 61.9 Ohms
SM653101285	5	Res Chip 1 % 75.0 Ohms
SM653101297	19	Res Chip 1% 100 Ohms
SM653101322	17	Res Chip 1% 182 Ohms

902603-00: WR 6100A 1 GHz 5 GS/s 4 Ch Acq Board (con't)

Part Number	Qty	Description
SM653101326	7	Res Chip 1% 200 Ohms
SM653101334	8	Res Chip 1% 243 Ohms
SM653101347	1	Res Chip 1% 332 Ohms
SM653101354	16	Res Chip 1% 392 Ohms
SM653101377	7	Res Chip 1% 681 Ohms
SM653101393	33	Res Chip 1% 1.00 K
SM653101397	1	Res Chip 1% 1.10 K
SM653101401	4	Res Chip 1% 1.21 K
SM653101410	16	Res Chip 1% 1.50 K
SM653101422	33	Res Chip 1% 2.00 K
SM653101422	4	Res Chip 1% 2.00 K
SM653101422	12	Res Chip 1% 2.00 K
SM653101426	9	Res Chip 1 % 2.21K
SM653101430	3	Res Chip 1% 2.43 K
SM653101435	2	Res Chip 1% 2.74 K
SM653101458	10	Res Chip 1 % 4.75 K
SM653101461	8	Res Chip 1% 5.11 K
SM653101469	1	Res Chip 1% 6.19 K
SM653101477	13	Res Chip 1% 7.50 K
SM653101489	20	Res Chip 1 % 10.0 K
SM653101489	4	Res Chip 1 % 10.0 K
SM653101506	5	Res Chip 1% 15.0 K
SM653101518	7	Res Chip 1% 20.0 K
SM653101539	8	Res Chip 1% 33.2 K
SM653101589	9	Res Chip 1% 110 K
SM653185193	1	Res Thick Film 9.09 Ohms
SM654101000	9	Chip Jumper Zero Ohms
SM654101000	12	Chip Jumper Zero Ohms
SM655020002	10	RES CHIP 1% 174 OHMS
SM655020017	30	Res Thk Film 1% 1K Ohm 1/16W
SM655020025	18	Res Thk Film 1% 2.74 Ohm 1/16W
SM655020031	10	Res Thk Film 1% 8.25 Ohm 1/16W
SM655030040	10	Res Thk Film +/-1% 5.11 Ohm .1
SM655030042	5	Res Thk Film 1% 5.6M Ohm 1/16W
SM655040022	5	Res Chip .5% 50ppm 180K 150V
SM655040023	5	Res Chip .5% 50ppm 240K 150V
SM655040024	40	Res Chip .5% 50ppm 300K 150V
SM655040025	10	Res Chip .5% 50ppm 110K 150V
SM655040026	1	Res Thk Film 41.2 Ohm .5% 1/8W
SM655040027	2	Res Thk Film 20 Ohm .5% 1/8W
SM655063001	2	Res Thk Film 5% 1.5 Ohms 1/8W
SM655080004	5	Res Thk Film 1 Ohm +/- 5% 1/2W
SM655080005	8	Res Thk Film 1% 105 Ohm 1/2W
SM655080009	1	Res Thk Film 0.5% 41.2 Ohm 1W

902603-00: WR 6100A 1 GHz 5 GS/s 4 Ch Acq Board (con't)

Part Number	Qty	Description
SM661010002	10	Cap Cera Chip 27PF +/- 5%
SM661010003	10	Cap Cera Chip 10% 16V 33nF
SM661011001	5	Cap Cera Chip 3.9pF 200V
SM661028100	15	Cap Cera Chip 1UF 10V
SM661028100	1	Cap Cera Chip 1UF 10V
SM661066102	88	Cap Cera Chip 10% 1000PF/50V
SM661066102	17	Cap Cera Chip 10% 1000PF/50V
SM661068104	5	Cap Cera Chip 0.1uF 0603
SM661068104	120	Cap Cera Chip 0.1uF 0603
SM661068104	21	Cap Cera Chip 0.1uF 0603
SM661073020	5	Cap Cera 2.0+/- 0.1PF 50V Npo
SM661073056	5	Cap Cera 5.6+/- 0.1PF 50V Npo
SM661073300	5	Cap Cera 30PF+/- 5% 50V Npo
SM661073331	3	Cap Cera 330PF+/- 5% 50V Npo
SM661073820	7	Cap Cera 82PF+/- 5% 50V Npo
SM661165102	3	Cap Cera Chip 1000PF
SM661207103	6	Cap Cera Chip 20% .01 UF
SM661207104	10	Cap Cera Chip 20 % .1 UF
SM661207104	218	Cap Cera Chip 20 % .1 UF
SM661207223	5	Cap Cera Chip 20% .022 UF
SM661255015	1	Cap Cera Chip 1.5 PF
SM661255121	3	Cap Cera Chip 5% 120 PF
SM661540056	10	Cap Cera Chip 5.6PF 500V
SM661540068	5	Cap Cera Chip 6.8PF 500V
SM662131003	48	Cap Cera Chip 5% 50V .01 UF
SM662135002	42	Cap Cera +/-.1pF 50V 1.0pF NPO
SM662151001	42	Cap Cera Chip 10% 16V 0.1 UF
SM662152001	18	Cap Cera Chip 10% 16V 100nF
SM662212001	5	Cap Cera .015uF 10% 25V X7R
SM662232001	8	10000pf 0603 capacitor
SM662241001	5	Cap Cera 22pF +/- 5% 100V Npo
SM662252001	5	Cap Cera .068uF 10% 16V X7R
SM662382001	5	Cap Cera 1000pF 10% 500V X7R
SM662432001	1	Cap Cera 4700pF 10% 50V X7R
SM662432002	1	Cap Cera Chip 0.22uF 10% 50V
SM662913001	63	Cap Cera Chip 10uF 20% 25V X5R
SM666267227	24	Cap Tant 220UF 10V 20%
SM668016226	48	Cap tant 22UF/16V 20 % L Esr
SM668025106	2	Cap,tant 10UF/25V 20% L Esr
SM669117001	12	Inductor Chip 2.2uH 20% 350mA
SM669854001	2	Inductor Chip 15uH 15% 2.97A

7.30 902604-00: WR 6200A 2 GHz 5 GS/s 4 Ch Acquisition Board

Part Number	Qty	Description
335970001	1	Probe Hook
402120004	1	Conn RT Angle Fem Bnc
416162005	1	Switch R/A PCB Mtg SPDT MOM
430500003	4	20DB Attenuator Relay DC-3GHZ
454000018	1	Hdr Sold Tail Male 18 Pin HI T
454004002	1	Conn Receptacle USB R/A 4 Pos
454016002	1	Conn Hdr Vert 16 Pos Wire-BD
454022001	1	HEADER VERT 22 POS WIRE BD
454040003	2	Conn Hdr Vert 40-Pos Male Shrd
454117003	4	Friction Header Straight .1 CE
454312010	4	Hdr Sold Tail/Male 10
469040002	1	Metal Banana Jack/Binding Post
522632120	6	Standoff Hex 6-32X5/8 F/F
524632015	4	Standoff Hex 6-32 X 1/2 FF
550011106	10	Screw Pan HD M2X6 Blk W/Nylock
551620100	10	#2 Flat Washer S.steel/Black O
555465002	1	Washer Lock Split 1/4
561632405	16	Screw TX Pan #6-32UNC 5/16" S1
590441024	0.07	Wire Teflon 7/32 Yel 24
594120006	2	Tiewrap
709614300	5	Bulkhead Receptical Female Bnc
709614301	5	BNC Lock Washer
709614302	5	BNC Nut
7093XXP01	5	Right Angle Recept. Connector
7093XXP41	5	Probe Holder
7093XXP91	5	Probe Ring Contact
901140-00	4	Chip Atten. 3dB .5% Trim Res
901336-00	1	Heatsink WaveRunner MST/MTB
901436-00	1	WaveRunner Front Card Panel Assy Upda
901437-00	2	Heatsink Base - HAD
901440-00	1	Heatsink Base mst/mtb
901441-00	1	Heatsink clip mst-mtb
901622-00	1	EMI shield - 10 GHZ clock
901685-00	5	Upper front end EMI shield
901686-00	5	Lower front end EMI shield
901693-00	1	Gap pad MST die cut
901694-00	1	Gap pad HTB die cut
901709-00	5	Malico 30mm heat sink assy
901790-00	2	WaveRunner CLOCK EMI SHIELD 0.4 IN. H
901807-00	1	ALUM. SPACER
901835-00	1	CABLE WaveRunner 10GHz MTB COAX
901835-01	1	CABLE WaveRunner 10GHz CH1 COAX
901835-02	1	CABLE WaveRunner 10GHz CH3 COAX

902604-00: WR 6200A 2 GHz 5 GS/s 4 Ch Acq Board (con't)

Part Number	Qty	Description
901882-00	1	Waverunner Acq. PCB
902138-00	2	Die cut GDS material with adhe
902463-00	2	WaveRunner Backbone
902528-00	6	Thermal Gap Pad Die-Cut
902530-00	2	Integrated Chip Cooler
CH599012012	0.1	5-Minute Epoxy
CH599041022	1	Heat Sink Compound 251
HAD639C-02	2	Packaged MAD440E 10GS/s SiGe
HFE653B	5	Front End Amplifier
HTB645	1	Hybrid Pkgd Timebase Trigger
MAM439	6	Monolithic 8 Megabyte Dram Mem
MST429A	1	IC Smart Trigger Gate-Array
SM158021002	10	Cap Variable 0.5-2.5pF 250V
SM158070200	10	Cap Variable 4.5-20.0 PF
SM185457102	5	Res Vari Cermet 1 K
SM185457201	1	Res Vari Cermet 200 Ohms
SM185457503	5	Res Vari Cermet 50 K
SM200180032	1	IC 2-in OR Gate 74VHC1G32
SM200588014	1	Hex Schmitt-Trig Inv 74HCT14
SM201274033	1	IC Ecl Divide BY 4 MC10EL33
SM201570016	2	IC Ecl Diff Receiver 10EL16D
SM201774025	3	Diff Ecl-Ttl Transl 10ELT25
SM202057002	1	IC Triple 2-CH Analog Mux
SM202059003	1	ECL Diff Rec/Driv w/Enable Out
SM202100004	1	IC PLL Freq Synth 4106 6 GHz
SM202102001	1	IC ECL /PECL 1:5 DIFF CLK DRVR
SM202107002	1	100EP57 4:1 MUX
SM205129160	1	IC FLASH MEM 16 MBIT HY29LV160
SM205200002	1	IC 8M x 8 Bit 133MHz SDRAM
SM205616001	5	IC 8-Bit Shift Reg 74LV594ADR
SM205625616	1	IC 256K X 16 CMOS SRAM
SM205715003	2	IC PAL FG456 Fine-Pitch BGA
SM206178125	1	IC Quad Bfr Line Drvr 3 State
SM206370024	3	IC Ttl TO Diff Ecl Transl MC10
SM207010002	3	IC CMOS 8 BIT LOW RES BUS SWIT
SM207010011	2	IC Quad 10-Bit DAC LTC1664
SM207010014	1	16 Bit Buffer/Driver 3-State
SM207131660	1	IC Dac Octal 10BIT Serial Unip
SM207231654	4	IC Dual 14-Bit Serial Dac
SM207770442	5	IC Analog Switch DG442
SM207944351	5	OCTAL ANALOG MUX/DEMUX 74HCT43
SM208400001	3	IC MMIC Amplifier 12GHz NBB-30
SM208400002	1	IC MMIC Amplifier 8GHz NBB-400
SM208470353	8	IC Dual OP Amp LF353

902604-00: WR 6200A 2 GHz 5 GS/s 4 Ch Acq Board (con't)

Part Number	Qty	Description
SM208470656	5	IC FET-Input OP Amp OPA656U
SM208470705	11	IC OP Amp Picoamp Input AD705
SM208472022	7	Opamp, Dual, Low Pwr TLE2022C
SM208475460	5	IC OP Amp Sin-Sup RtoR Ins Amp
SM208476482	2	IC Dual OP Amp Rail TO Rail 64
SM208550004	8	IC Volt Reg Pos Adjust LDO
SM208550337	1	IC Volt Reg Adj LM337
SM208550821	1	Voltage Monitor MAX821
SM208556138	1	IC Volt Ref 4.096V 0.1% 25ppm
SM208701023	11	IC Temperature Sensor
SM208909850	1	DDS-125MHZ Cmos Synth AD9850
SM227110161	1	16 BIT MICROCONTROLLER C161PI
SM229020150	5	MLC Trans Volt Suppressor
SM232022824	1	Diode Array Schottky HSMS2824
SM232030001	10	Diode Array Schottky HSMS-282C
SM232442828	5	Diode Bridge HSMS2828
SM236030099	11	Diode SO-Pkg BAV99
SM252005303	10	Pin Diode Bar 63-03W
SM252023066	20	Pin Diode Bar 66
SM252023304	5	Dual Pin Diode Silicon Bar 63-
SM256232013	1	Diode Light Emitting Red
SM270050520	15	NPN 9GHZ Wideband Transistor
SM270130092	6	Transistor Npn BFR92A
SM270330848	2	Transistor Npn BC848C
SM275030550	5	Transistor Pnp BF550
SM275132907	1	Transistor Pnp 2907A
SM280122416	5	Trans. Jfet N MMBF4416/LC6A
SM280217505	2	Mosfet Nchanel 75A 50V D2P
SM281115003	4	P-CH Hdtmos Pwr E-Fet MTB50P03
SM289772003	5	Transistor Array 2003
SM300092390	1	Inductor Wound 2% 39 NH
SM300600009	2	Inductor 9.3uH 7.2A Wound
SM300600012	2	Inductor 150nH 5% Wound
SM301001001	16	BEAD FERRITE
SM301001002	6	Bead SHF 0.3A
SM301001016	4	Inductor Pwr Toroid 272uH .36A
SM301001017	3	Inductor Chip 10% 15uH 1210
SM301001018	1	Inductor Shielded 100uH 10%
SM301004001	40	Bead Ferrite 50 Ohms 3AMPS 120
SM311000005	1	Crystal Oscillator 16 MHz 3.3V
SM311000006	1	Voltage Controlled Oscillator
SM311000013	1	Crystal Osc TCXO 10MHz
SM430530001	20	Relay Smd Dual Form C 5V
SM431030005	5	Relay SPDT HF 50 Ohm 4.5V

902604-00: WR 6200A 2 GHz 5 GS/s 4 Ch Acq Board (con't)

Part Number	Qty	Description
SM433695250	2	PTC Resettable Device 2.5A
SM453005001	3	Header 1 x 5 Shrouded
SM507000002	2	Heatsink Surface Mount TO-263
SM651081102	8	Res Chip 0.1% 1 Kohm
SM652000005	10	Res RF 100 Ohm .25% 1/3W 1206
SM652041000	49	Res Zero ohms
SM652041011	52	Res Chip 1% 49.9 Ohms
SM652041200	11	Res 20 Ohms +/-1% 1/16W 0402 S
SM652041750	1	Res 75 OHM +/-1% 1/16W
SM652061000	11	Res Chip 0 Ohm Jumper
SM652061000	10	Res Chip 0 Ohm Jumper
SM652061100	20	Res Chip 1% 10.0 Ohm .063W
SM652061100	10	Res Chip 1% 10.0 Ohm .063W
SM652061101	10	Res Chip 1% 100 Ohm .063W
SM652061101	12	Res Chip 1% 100 Ohm .063W
SM652061101	3	Res Chip 1% 100 Ohm .063W
SM652061102	5	Res Chip 1% 1.0K Ohm .063W
SM652061102	16	Res Chip 1% 1.0K Ohm .063W
SM652061102	23	Res Chip 1% 1.0K Ohm .063W
SM652061103	19	Res Chip 1% 10K Ohm .063W
SM652061103	6	Res Chip 1% 10K Ohm .063W
SM652061105	1	Res Chip 1% 1.0M Ohm .063W
SM652061105	5	Res Chip 1% 1.0M Ohm .063W
SM652061106	5	Res Chip 1% 10M Ohm .063W
SM652061112	10	Res Chip 1% 1.1K Ohm .063W
SM652061121	15	Res Chip 1% 120 Ohm .063W
SM652061121	50	Res Chip 1% 120 Ohm .063W
SM652061131	5	Res Chip 1% 130 Ohm .063W
SM652061133	4	Res Chip 1% 13K Ohm .063W
SM652061154	5	Res Chip 1% 150K Ohm .063W
SM652061161	15	Res Chip 1% 160 Ohm .063W
SM652061200	1	Res Chip 1% 20.0 Ohm .063W
SM652061201	5	Res Chip 1% 200 Ohm .063W
SM652061201	14	Res Chip 1% 200 Ohm .063W
SM652061201	1	Res Chip 1% 200 Ohm .063W
SM652061203	11	Res Chip 1% 20K Ohm .063W
SM652061221	18	Res Chip 1% 220 Ohm .063W
SM652061222	2	Res Chip 1% 2.2K Ohm .063W
SM652061222	4	Res Chip 1% 2.2K Ohm .063W
SM652061222	5	Res Chip 1% 2.2K Ohm .063W
SM652061240	5	Res Chip 1% 24.0 Ohm .063W
SM652061240	1	Res Chip 1% 24.0 Ohm .063W
SM652061271	10	Res Chip 1% 270 Ohm .063W
SM652061271	2	Res Chip 1% 270 Ohm .063W

902604-00: WR 6200A 2 GHz 5 GS/s 4 Ch Acq Board (con't)

Part Number	Qty	Description
SM652061271	4	Res Chip 1% 270 Ohm .063W
SM652061271	20	Res Chip 1% 270 Ohm .063W
SM652061273	5	Res Chip 1% 27K Ohm .063W
SM652061273	20	Res Chip 1% 27K Ohm .063W
SM652061332	5	Res Chip 1% 3.3K Ohm .063W
SM652061332	4	Res Chip 1% 3.3K Ohm .063W
SM652061334	1	Res Chip 1% 330K Ohm .063W
SM652061361	3	Res Chip 1% 360 Ohm .063W
SM652061361	15	Res Chip 1% 360 Ohm .063W
SM652061361	5	Res Chip 1% 360 Ohm .063W
SM652061390	5	Res Chip 1% 39.0 Ohm .063W
SM652061390	41	Res Chip 1% 39.0 Ohm .063W
SM652061393	5	Res Chip 1% 39K Ohm .063W
SM652061393	1	Res Chip 1% 39K Ohm .063W
SM652061393	5	Res Chip 1% 39K Ohm .063W
SM652061394	5	Res Chip 1% 390K Ohm .063W
SM652061430	10	Res Chip 1% 43.2 Ohm .063W
SM652061431	1	Res Chip 1% 430 Ohm .063W
SM652061432	6	Res Chip 1% 4.3K Ohm .063W
SM652061471	5	Res Chip 1% 470 Ohm .063W
SM652061510	12	Res Chip 1% 51.0 Ohm .063W
SM652061510	25	Res Chip 1% 51.0 Ohm .063W
SM652061510	5	Res Chip 1% 51.0 Ohm .063W
SM652061511	6	Res Chip 1% 510 Ohm .063W
SM652061512	5	Res Chip 1% 5.1K Ohm .063W
SM652061513	5	Res Chip 1% 51K Ohm .063W
SM652061562	5	Res Chip 1% 5.6K Ohm .063W
SM652061681	1	Res Chip 1% 681 Ohm .063W
SM652061681	5	Res Chip 1% 681 Ohm .063W
SM652061751	1	Res Chip 1% 750 Ohm .063W
SM652061751	5	Res Chip 1% 750 Ohm .063W
SM652061824	5	Res Chip 1% 820K Ohm .063W
SM652061912	5	Res Chip 1% 9.1K Ohm .063W
SM652069393	10	Res Chip (E24) .1% 39K
SM652101101	2	Res Chip (E24) 1% 100 Ohm
SM652101302	1	Res Chip (E24) 1% 3 K
SM652101395	5	Res Chip (E24) 1% 3.9 M
SM653041297	5	RES CHIP 1% 100 OHMS 0402
SM653101226	1	Res Chip 1% 18.2 Ohms
SM653101262	9	Res Chip 1% 43.2 Ohms
SM653101277	7	Res Chip 1% 61.9 Ohms
SM653101285	5	Res Chip 1 % 75.0 Ohms
SM653101297	19	Res Chip 1% 100 Ohms

902604-00: WR 6200A 2 GHz 5 GS/s 4 Ch Acq Board (con't)

Part Number	Qty	Description
SM653101322	17	Res Chip 1% 182 Ohms
SM653101326	7	Res Chip 1% 200 Ohms
SM653101334	8	Res Chip 1% 243 Ohms
SM653101347	1	Res Chip 1% 332 Ohms
SM653101354	16	Res Chip 1% 392 Ohms
SM653101377	7	Res Chip 1% 681 Ohms
SM653101393	33	Res Chip 1% 1.00 K
SM653101397	1	Res Chip 1% 1.10 K
SM653101401	4	Res Chip 1% 1.21 K
SM653101410	16	Res Chip 1% 1.50 K
SM653101422	33	Res Chip 1% 2.00 K
SM653101422	4	Res Chip 1% 2.00 K
SM653101422	12	Res Chip 1% 2.00 K
SM653101426	9	Res Chip 1 % 2.21K
SM653101430	3	Res Chip 1% 2.43 K
SM653101435	2	Res Chip 1% 2.74 K
SM653101458	10	Res Chip 1 % 4.75 K
SM653101461	8	Res Chip 1% 5.11 K
SM653101469	1	Res Chip 1% 6.19 K
SM653101477	13	Res Chip 1% 7.50 K
SM653101489	20	Res Chip 1 % 10.0 K
SM653101489	4	Res Chip 1 % 10.0 K
SM653101506	5	Res Chip 1% 15.0 K
SM653101518	7	Res Chip 1% 20.0 K
SM653101539	8	Res Chip 1% 33.2 K
SM653101589	9	Res Chip 1% 110 K
SM653185193	1	Res Thick Film 9.09 Ohms
SM654101000	9	Chip Jumper Zero Ohms
SM654101000	12	Chip Jumper Zero Ohms
SM655020002	10	RES CHIP 1% 174 OHMS
SM655020017	30	Res Thk Film 1% 1K Ohm 1/16W
SM655020025	18	Res Thk Film 1% 2.74 Ohm 1/16W
SM655020031	10	Res Thk Film 1% 8.25 Ohm 1/16W
SM655030040	10	Res Thk Film +/-1% 5.11 Ohm .1
SM655030042	5	Res Thk Film 1% 5.6M Ohm 1/16W
SM655040022	5	Res Chip .5% 50ppm 180K 150V
SM655040023	5	Res Chip .5% 50ppm 240K 150V
SM655040024	40	Res Chip .5% 50ppm 300K 150V
SM655040025	10	Res Chip .5% 50ppm 110K 150V
SM655040026	1	Res Thk Film 41.2 Ohm .5% 1/8W
SM655040027	2	Res Thk Film 20 Ohm .5% 1/8W
SM655063001	2	Res Thk Film 5% 1.5 Ohms 1/8W
SM655080004	5	Res Thk Film 1 Ohm +/- 5% 1/2W
SM655080005	8	Res Thk Film 1% 105 Ohm 1/2W

902604-00: WR 6200A 2 GHz 5 GS/s 4 Ch Acq Board (con't)

Part Number	Qty	Description
SM655080009	1	Res Thk Film 0.5% 41.2 Ohm 1W
SM661010002	10	Cap Cera Chip 27PF +/- 5%
SM661010003	10	Cap Cera Chip 10% 16V 33nF
SM661011001	5	Cap Cera Chip 3.9pF 200V
SM661028100	15	Cap Cera Chip 1UF 10V
SM661028100	1	Cap Cera Chip 1UF 10V
SM661066102	88	Cap Cera Chip 10% 1000PF/50V
SM661066102	17	Cap Cera Chip 10% 1000PF/50V
SM661068104	5	Cap Cera Chip 0.1uF 0603
SM661068104	120	Cap Cera Chip 0.1uF 0603
SM661068104	21	Cap Cera Chip 0.1uF 0603
SM661073020	5	Cap Cera 2.0+/- 0.1PF 50V Npo
SM661073056	5	Cap Cera 5.6+/- 0.1PF 50V Npo
SM661073300	5	Cap Cera 30PF+/- 5% 50V Npo
SM661073331	3	Cap Cera 330PF+/- 5% 50V Npo
SM661073820	7	Cap Cera 82PF+/- 5% 50V Npo
SM661165102	3	Cap Cera Chip 1000PF
SM661207103	6	Cap Cera Chip 20% .01 UF
SM661207104	10	Cap Cera Chip 20 % .1 UF
SM661207104	218	Cap Cera Chip 20 % .1 UF
SM661207223	5	Cap Cera Chip 20% .022 UF
SM661255015	1	Cap Cera Chip 1.5 PF
SM661255121	3	Cap Cera Chip 5% 120 PF
SM661540056	10	Cap Cera Chip 5.6PF 500V
SM661540068	5	Cap Cera Chip 6.8PF 500V
SM662131003	48	Cap Cera Chip 5% 50V .01 UF
SM662135002	28	Cap Cera +/-.1pF 50V 1.0pF NPO
SM662151001	42	Cap Cera Chip 10% 16V 0.1 UF
SM662152001	18	Cap Cera Chip 10% 16V 100nF
SM662212001	5	Cap Cera .015uF 10% 25V X7R
SM662232001	8	10000pf 0603 capacitor
SM662241001	5	Cap Cera 22pF +/- 5% 100V Npo
SM662252001	5	Cap Cera .068uF 10% 16V X7R
SM662382001	5	Cap Cera 1000pF 10% 500V X7R
SM662432001	1	Cap Cera 4700pF 10% 50V X7R
SM662432002	1	Cap Cera Chip 0.22uF 10% 50V
SM662913001	63	Cap Cera Chip 10uF 20% 25V X5R
SM666267227	24	Cap Tant 220UF 10V 20%
SM668016226	48	Cap tant 22UF/16V 20 % L Esr
SM668025106	2	Cap,tant 10UF/25V 20% L Esr
SM669049003	28	Inductor 3.3nH +/-5%
SM669117001	12	Inductor Chip 2.2uH 20% 350mA
SM669854001	2	Inductor Chip 15uH 15% 2.97A

8. Mechanical Parts

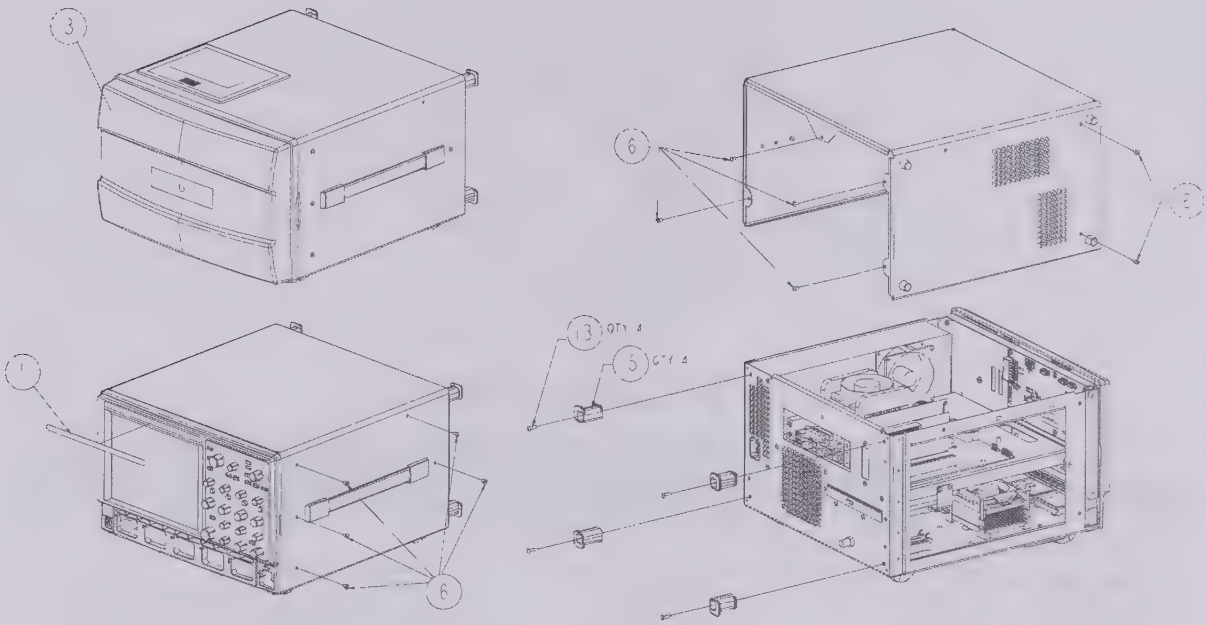

Figure 8-1: WaveRunner Top Cover Removal

Item	LeCroy Part Number	Qty	Description
13	901446-00	4	Rear Foot
15	561632408	4	Screw TX Pan #6-32 UNC 1/2" S1
1	901496-03	1	Front Panel Overlay WaveRunner 6200
1	901496-00	1	Front Panel Overlay WaveRunner 6100
1	901496-01	1	Front Panel Overlay WaveRunner 6050
1	901496-02	1	Front Panel Overlay WaveRunner 6051
1	901496-04	1	Front Panel Overlay WaveRunner 6030
1	902491-00	1	Front Panel Overlay WaveRunner 6100A
1	902491-01	1	Front Panel Overlay WaveRunner 6050A
1	902491-02	1	Front Panel Overlay WaveRunner 6051A
1	902491-03	1	Front Panel Overlay WaveRunner 6030A
1	902491-04	1	Front Panel Overlay WaveRunner 6200A
6	561632604	10	Screw TX Pan #6-32 UNC 1/4" S3

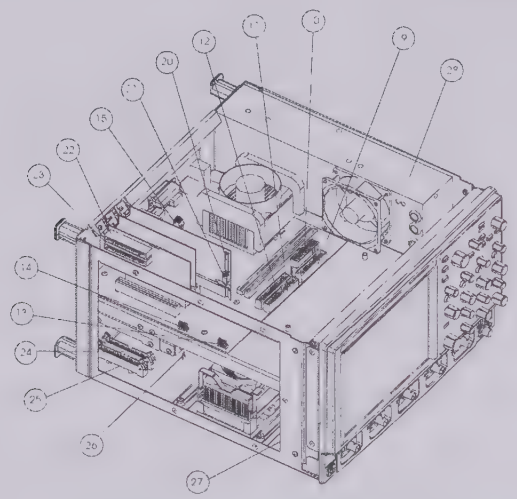

Figure 8-2 Cable Interconnections

	From		
Function	Item	Board	Connector
Front Panel keypad	1	Front Panel Encoder	U5
Front Panel keypad	2	USB Hub	P1
Power	3	USB Hub	P2
Trig/Ready LED Drive	4	USB Hub	J1
Inverter Power	5	Inverter	
Internal Printer	6	USB Hub	J23
USB 1 to 4	7	USB Hub	J3
Video	8	TFT	
Floppy Drive	9	Processor	FDD
Power	10	Processor	PS
Hard Drive	11	Processor	IDE
CD ROM Drive	12	Processor	SEC IDE
Power Switch	13	Processor	FRONT PANEL
USB Dual	14	Processor	FP USB
Power	15	Processor	J5C1
Power	16	Acquisition Board	J15
Power	17	Acquisition Board	J19
Power	18	Acquisition Board	J23
Front panel USB	19	Acquisition Board	J25
Video	20	DVO to LVDS Flat Panel	J1
Inverter Power	21	DVO to LVDS Flat Panel	J2
LVDS Data	22	PCI	J1
LVDS Data	23	PCI	J2
LVDS Data	24	Acquisition Board	J11
LVDS Data	25	Acquisition Board	J10
Trig/Ready LED Drive	26	Acquisition Board	J9000
Power Switch	27	Acquisition Board	J24
Rear Fan	Not shown	Fan	N/A
Hard Drive Power	Not shown	Not shown	
CD ROM Power	Not shown	Not shown	

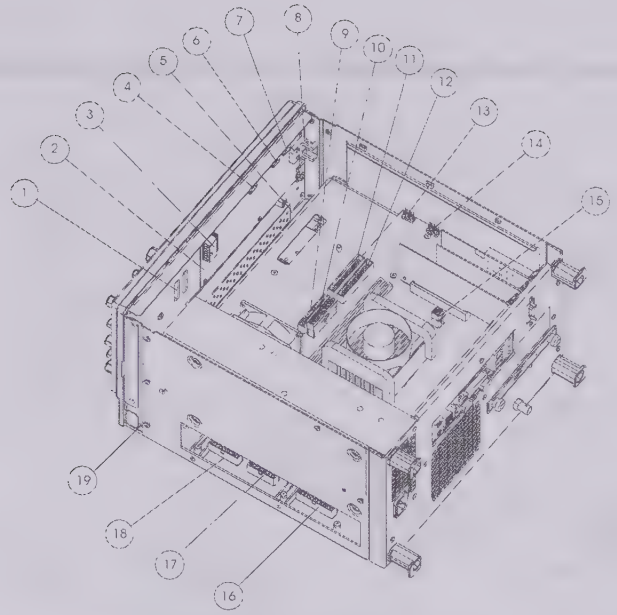

Figure 8-3 Cable Interconnections

	To		
Item	Board	Connector	Cable P/N
2	USB Hub	P1	592060001
1	Front Panel Encoder	U5	592060001
28	Power Supply	J3	N/A
26	Acquisition Board	J9000	901530-00
8	DVO to LVDS Flat Panel	J2	901524-00
Not shown	Internal Printer		
14	Processor Board	FP USB	901531-00
20	DVO to LVDS Flat Panel	J1	901527-00
N/A	Not used	N/A	N/A
28	Power Supply	J1	N/A
Not shown	Hard Drive		901526-00
Not shown	CD ROM Drive		901525-00
27	Acquisition Board	J10	901529-00
7 & 19	USB Hub, Acquisition Board	J3, J25	901531-00
28	Power Supply	J2	N/A
28	Power Supply	J5	N/A
28	Power Supply	J4	N/A
28	Power Supply	J6	N/A
14	Processor Board	FP USB	901531-00
8	TFT		901527-00
5	Inverter		901524-00
25	Acquisition Board	J10	901523-00
24	Acquisition Board	J11	901523-00
23	PCI	J2	901523-00
22	PCI	J1	901523-00
4	USB Hub	J1	901530-00
13	Processor Board	FRONT PANEL	901529-00
Not shown	Acquisition Board	J4	N/A
28	Power Supply	J7	N/A
28	Power Supply	J8	N/A

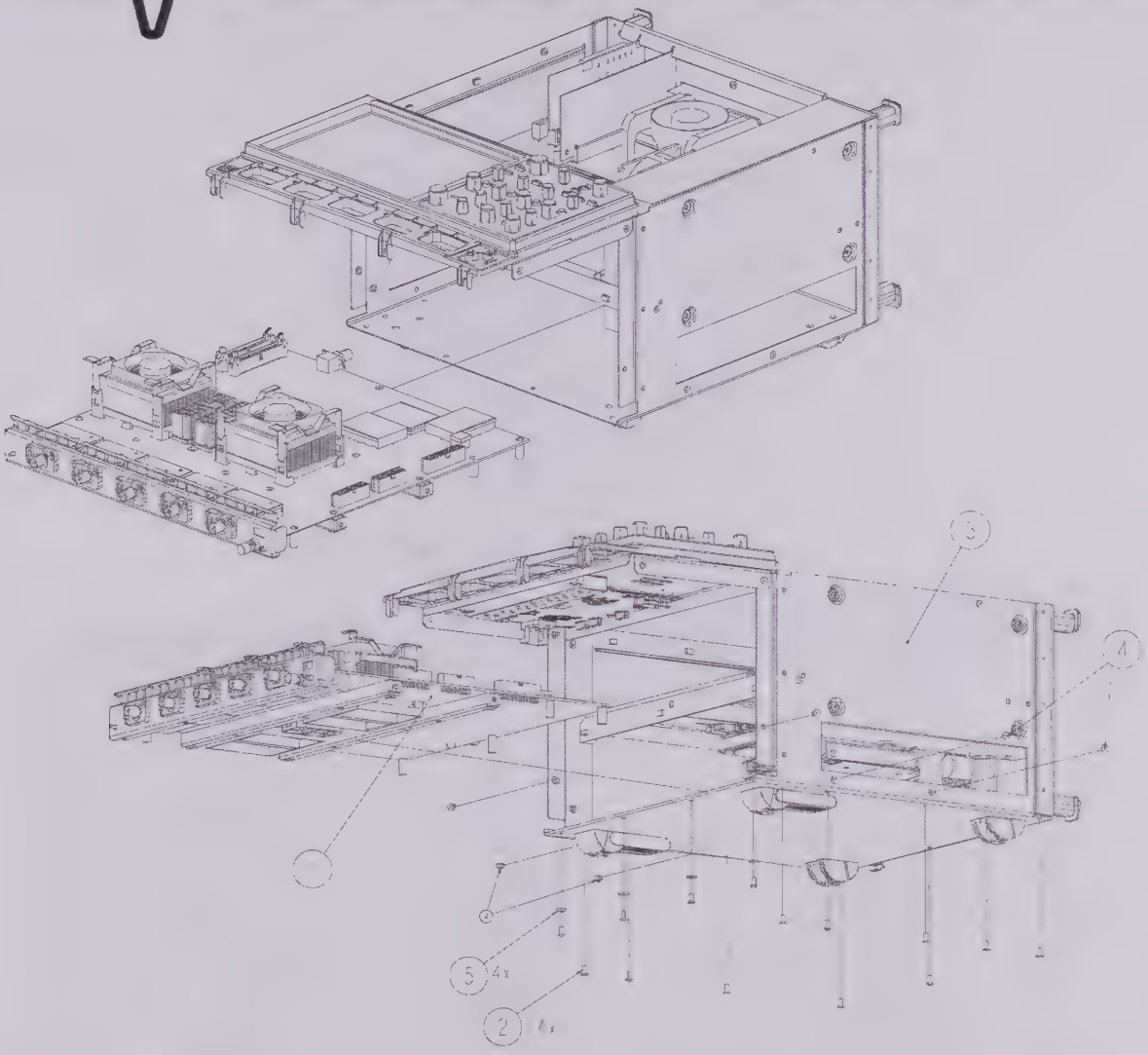

Figure 8-4 Bezel Open & Acquisition Board Installation

Item	LeCroy Part Number	Qty	Description
1	900888-00	1	2 GHz 5GS/s 4 Channel Acq System
1	901765-00	1	1 GHz 5GS/s 4 Channel Acq System
1	901764-00	1	500 MHz 5GS/s 4 Channel Acq System
1	901763-00	1	500 MHz 5GS/s 2 Channel Acq System
1	901806-00	1	350 MHz 2.5GS/s 4 Channel Acq System
1*	902600-00	1	350 MHz 2.5GS/s 4 Channel Acq System
1*	902601-00	1	500 MHz 5GS/s 2 Channel Acq System
1*	902602-00	1	500 MHz 5GS/s 4 Channel Acq System
1*	902603-00	1	1 GHz 5GS/s 4 Channel Acq System
1*	902604-00	1	2 GHz 5GS/s 4 Channel Acq System
2	561632405	14	Screw TX Pan #6-32UNC 5/16" S1
3	901277-00	1	Chassis Bottom
4	562632403	4	Screw TX Flat UCUT #6-32 3/16"
5	575610002	4	Washer Flat Reg OD Size 6

*used in WR6000 “A” series

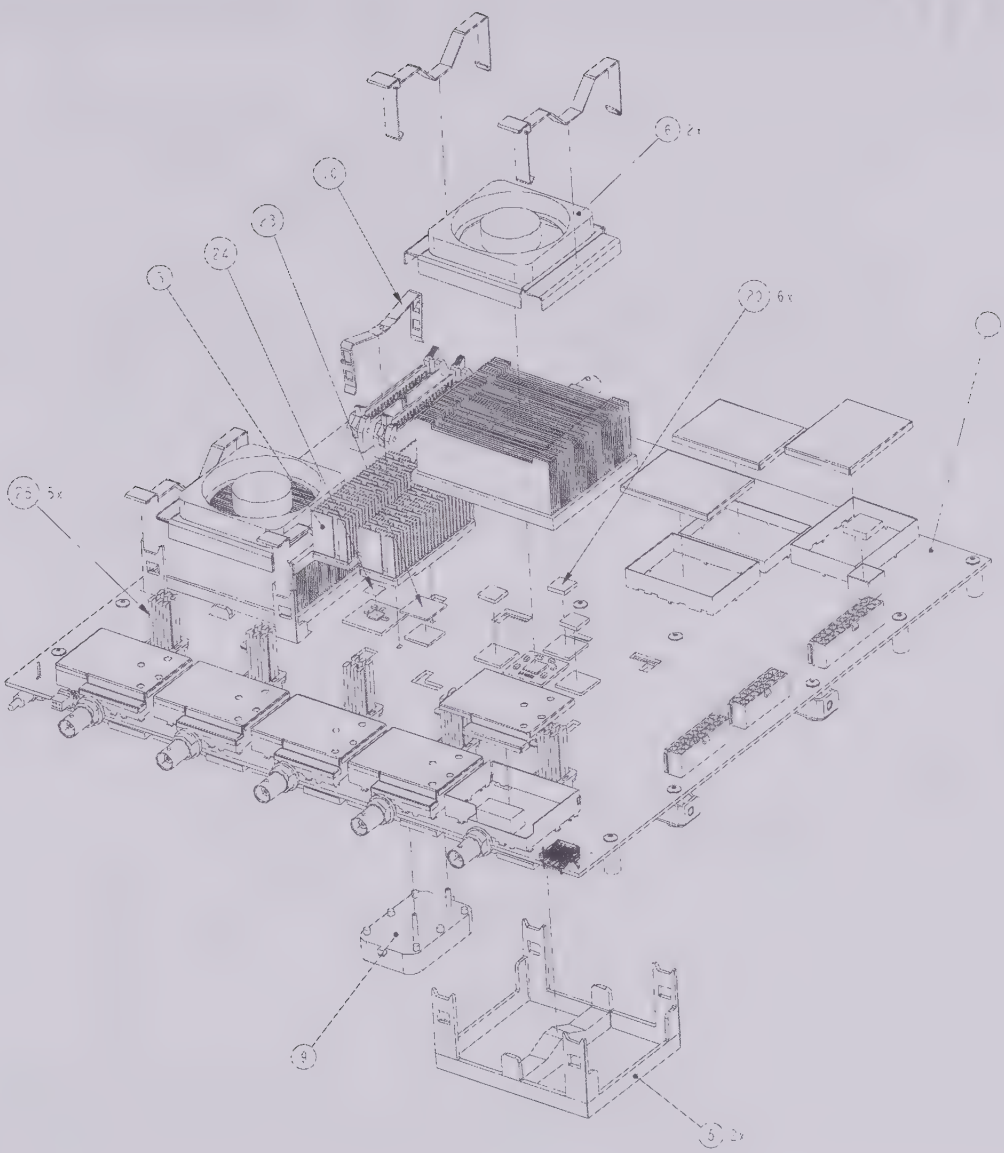

Figure 8-5 Acquisition Board Assembly (Top Side)

Item	LeCroy Part Number	Qty	Description
1		1	Printer Circuit Assembly
3	901336-00	1	Heatsink WAVERUNNER MST/MTB
5	901437-00	1	Heatsink Base - HAD
6	902530-00	1	Integrated Chip Cooler
9	901440-00	1	Heatsink Base mst/mtb
10	901441-00	1	Heatsink clip mst-mtb
20	902528-00	3	Thermal Gap Pad Die-Cut
23	901693-00	1	Gap pad MST die cut
24	901694-00	1	Gap pad HTB die cut
25	901709-00	3	Malico 30mm heat sink assy

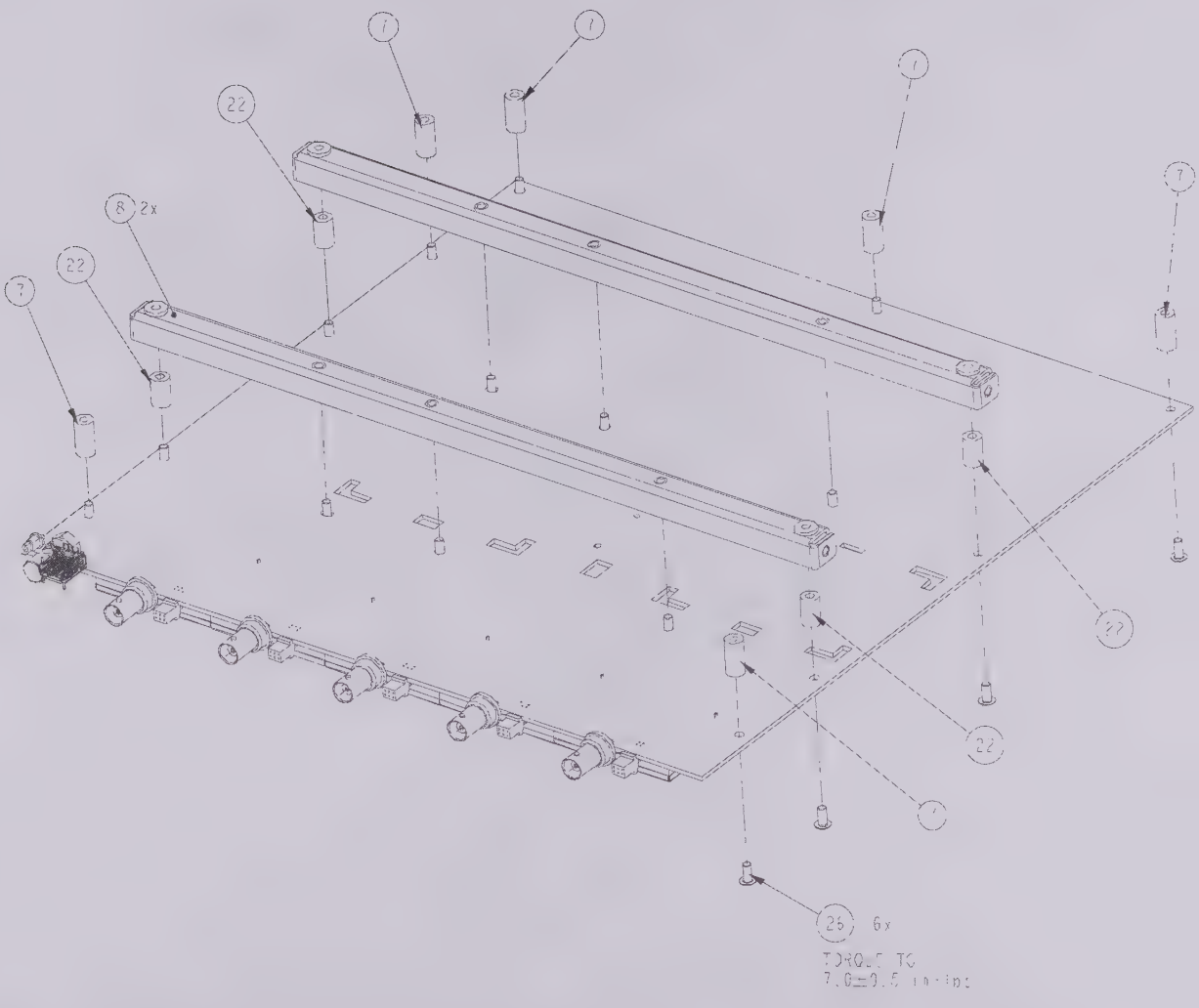

Figure 8-6 Acquisition Board Assembly (Bottom Side)

Item	LeCroy Part Number	Qty	Description
7	522632120	6	Standoff Hex 6-32X5/8 F/F
8	902463-00	2	WAVERUNNER Backbone
22	524632015	4	Standoff Hex 6-32 X 1/2 FF
26	561632405	16	Screw TX Pan #6-32UNC 5/16" S1

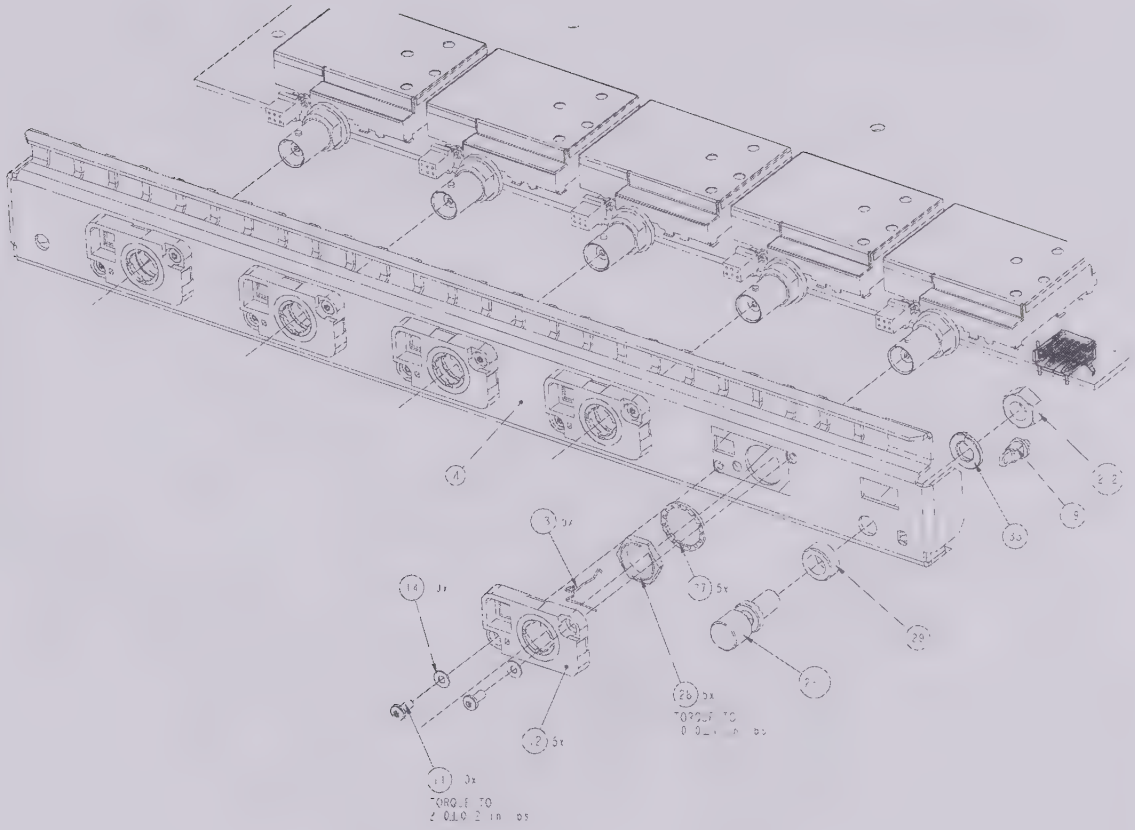

Figure 8-7 Acquisition Board Front Panel Assembly

Item	LeCroy Part Number	Qty	Description
2	469040002	1	Metal Banana Jack/Binding Post
4	901436-00	1	WAVERUNNER Front Card Panel Assy Upda
11	550011106	6	Screw Pan HD M2X6 Blk W/Nylock
12	7093XXP41	3	Probe Holder
13	7093XXP91	3	Probe Ring Contact
14	551620100	6	#2 Flat Washer S.steel/Black O
19	335970001	1	Probe Hook
27	709614301	3	BNC Lock Washer
28	709614302	3	BNC Nut
29	901807-00	1	ALUM. SPACER
33	555465002	1	Washer Lock Split 1/4

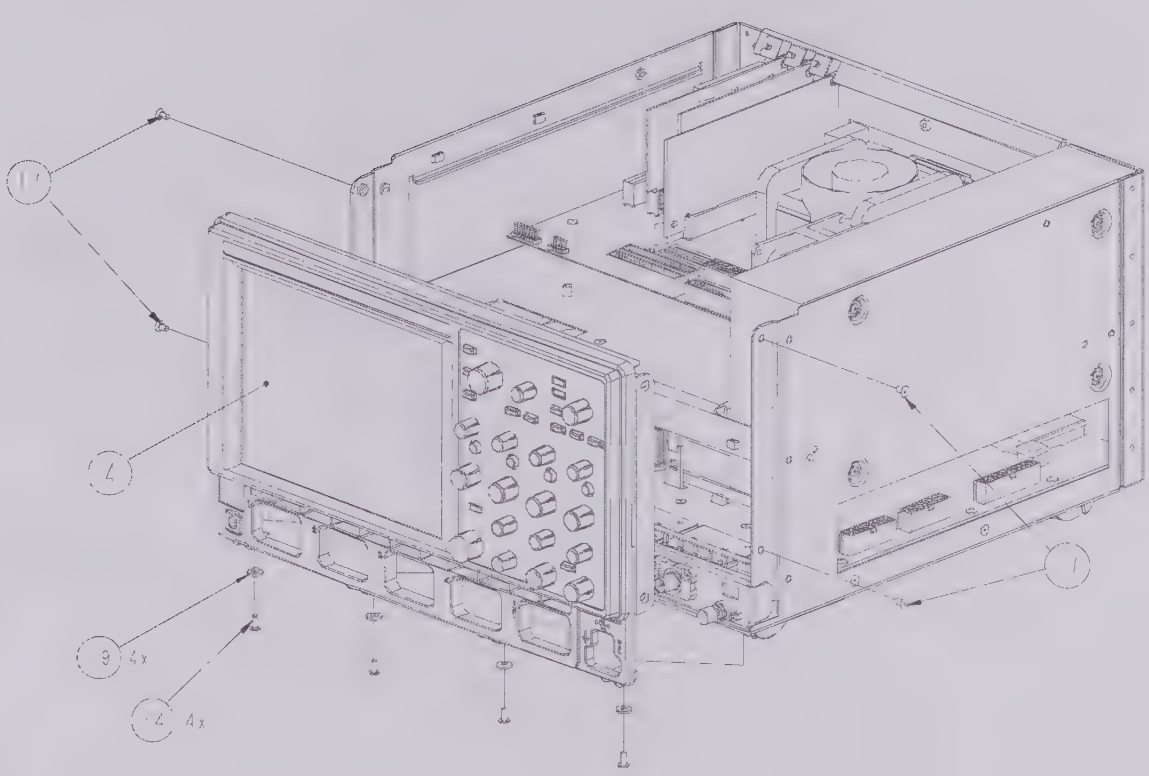

Figure 8-8 Front Frame Installation

Item	LeCroy Part Number	Qty	Description
4	See Fig 8-8 – 8-12	1	2 Channel Front Frame
4	See Fig 8-8 – 8-12	1	4 Channel Front Frame
14	561632405	4	Screw TX Pan #6-32UNC 5/16" S1
17	561632403	4	Screw TX Flat UCUT #6-32 3/16"
19	575610002	4	Washer Flat Reg OD Size 6

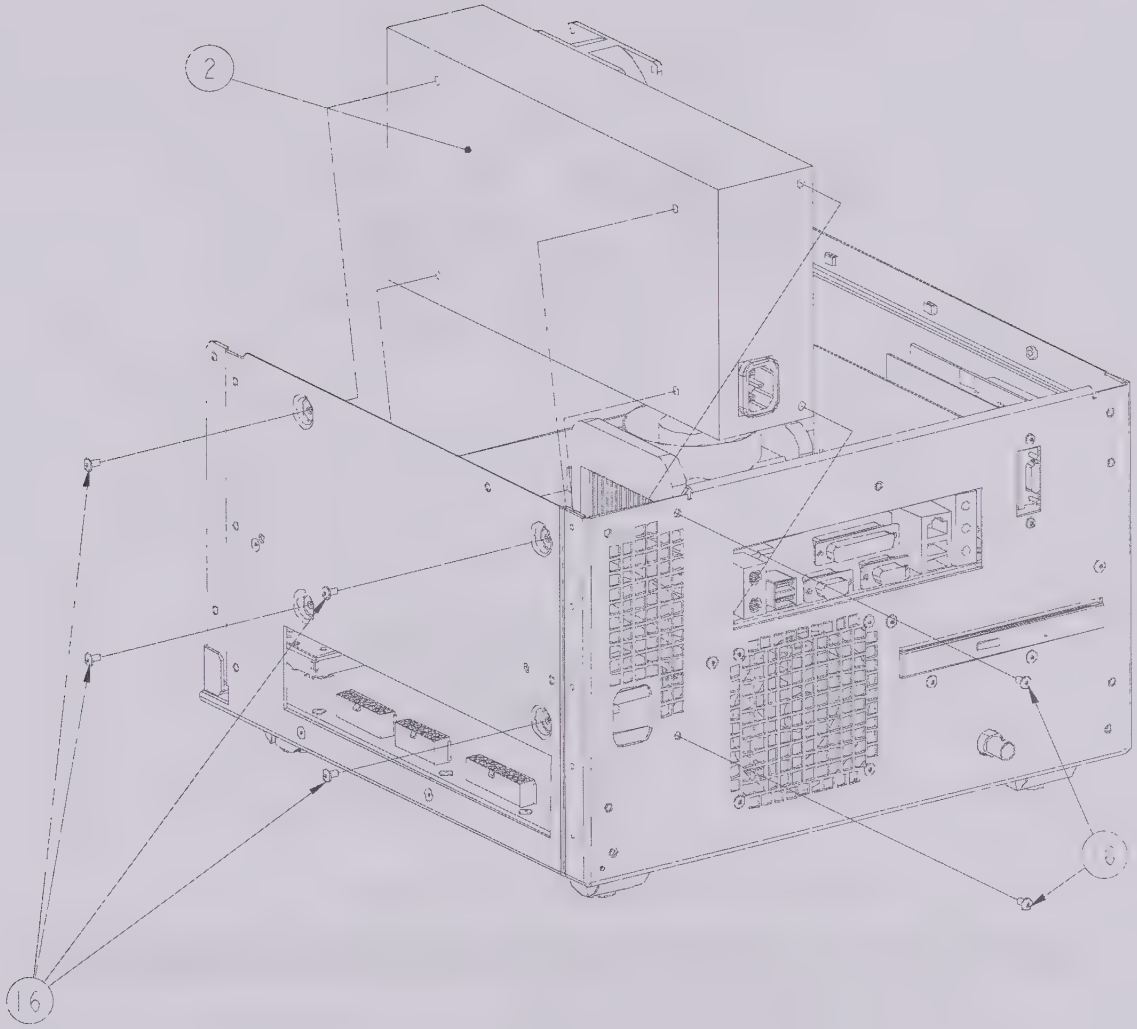

Figure 8-9 Power Supply Installation

Item	LeCroy Part Number	Qty	Description
2	900893-00	1	Waverunner Power Supply Module
16	561632604	6	Screw TX Pan #6-32 UNC 1/4" S3

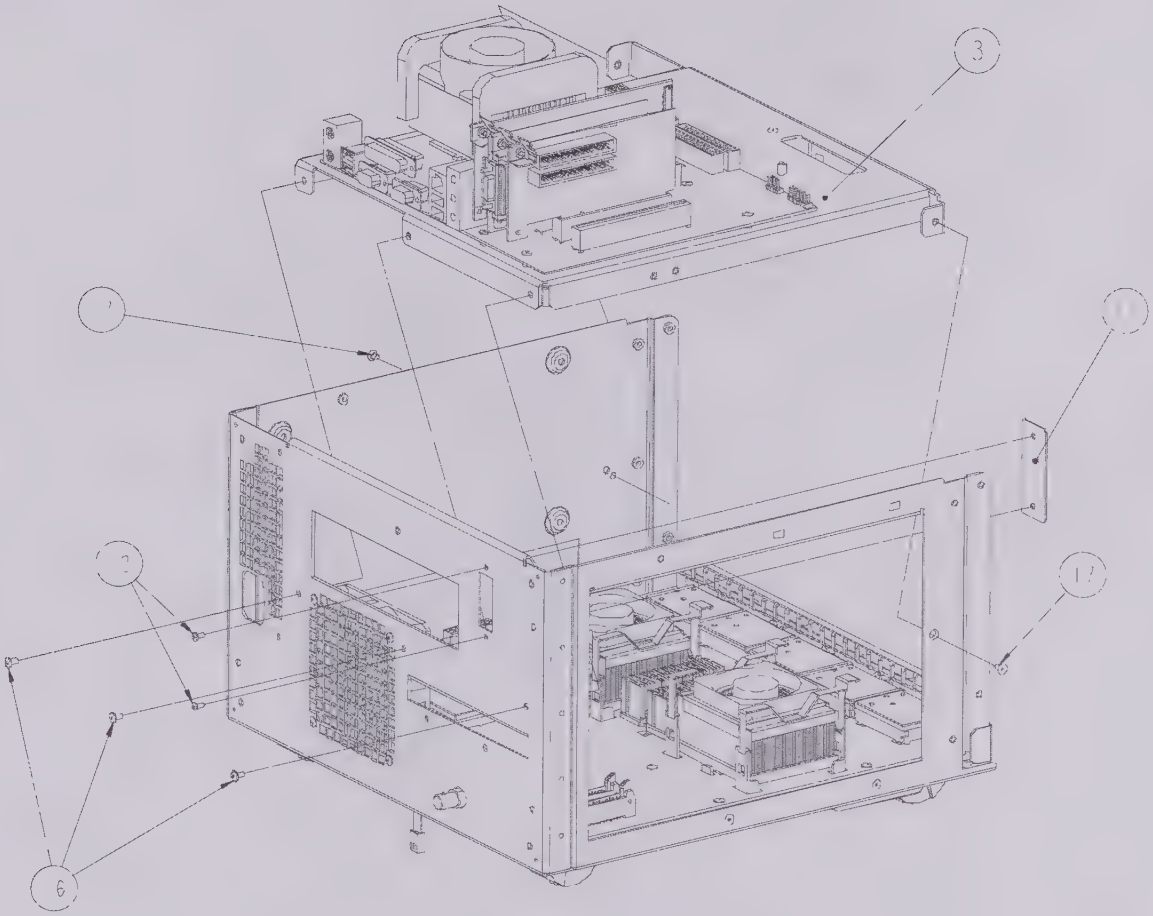

Figure 8-10 Processor Assembly Installation

Item	LeCroy Part Number	Qty	Description
3	See Fig 8-8	1	Complete Computer System Tray Assy
11	901880-00	1	GPIB Blanking Plate
12	561440040	2	Screw TX PAN 4# -40UNF 1/4IN
16	561632604	3	Screw TX Pan #6-32 UNC 1/4" S3
17	562632403	2	Screw TX Flat UCUT #6-32 3/16"

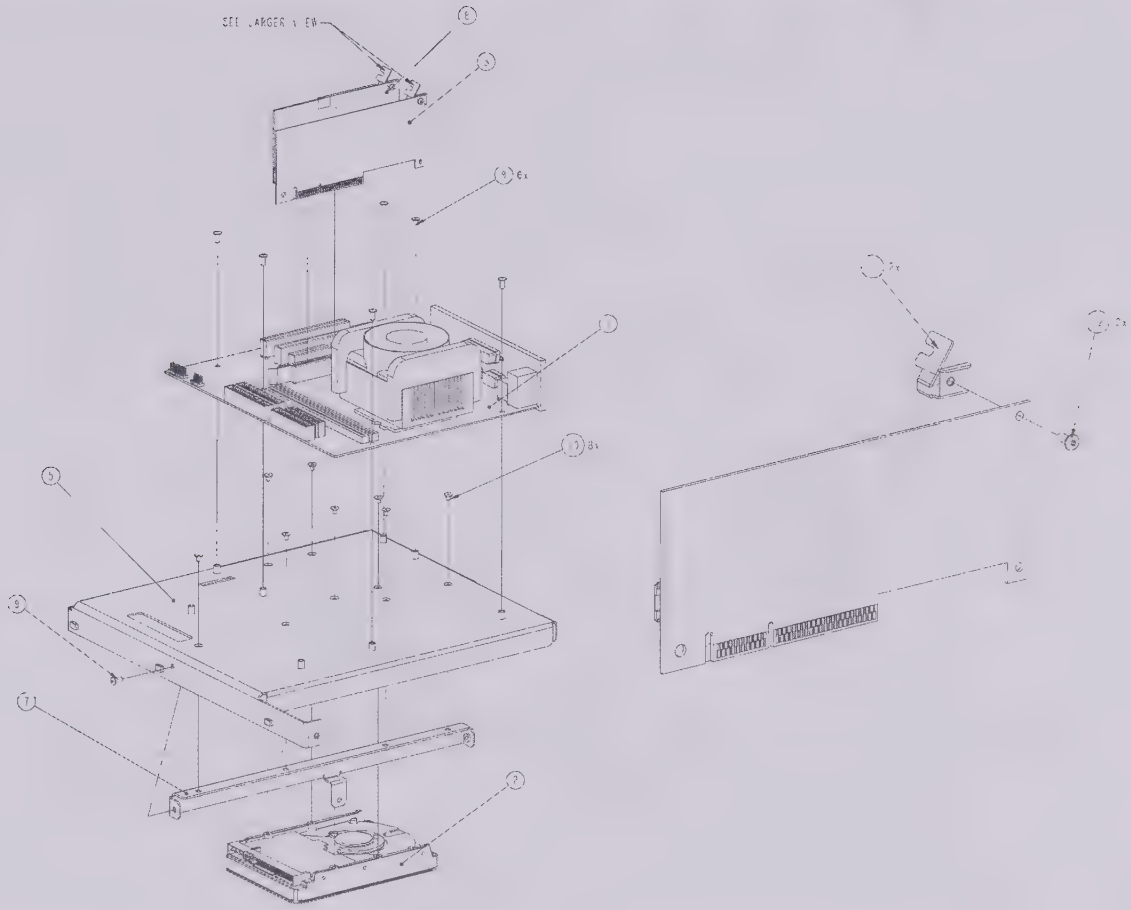

Figure 8-11 Processor Tray Assembly

Item	LeCroy Part Number	Qty	Description
1	334600003	1	Motherboard P4 uATX (shipped in units S/N LCRY0603Pxxxxx & LCRY0604Pxxxxx
	334600002	1	Motherboard P4 uATX (shipped in units S/N LCRY0601Pxxxxx & LCRY0602Pxxxxx
2	330000005	1	40Gb 7200 RPM Hard Drive
3	901949-00	1	AGP/DVO Interface
3*	902572-00	1	AGP/DVO Interface
5	901278-00	1	Motherboard Support Tray
7	901647-00	1	Stiffener Rib
8	900890-00	1	PCI Interface
9	561632405	7	Screw TX Pan #6-32UNC 5/16" S1
10	562632403	8	Screw TX Flat UCUT #6-32 3/16"
	227500017	1	Celeron 1.7GHz for MotherBoard 334600002
	227500020	1	Celeron 2.0GHz for MotherBoard 334600003
	902530-00	1	Integrated Cooler
	334740001	1	256MB
	334740002	1	512MB

*used in WaveRunner 6000 A series

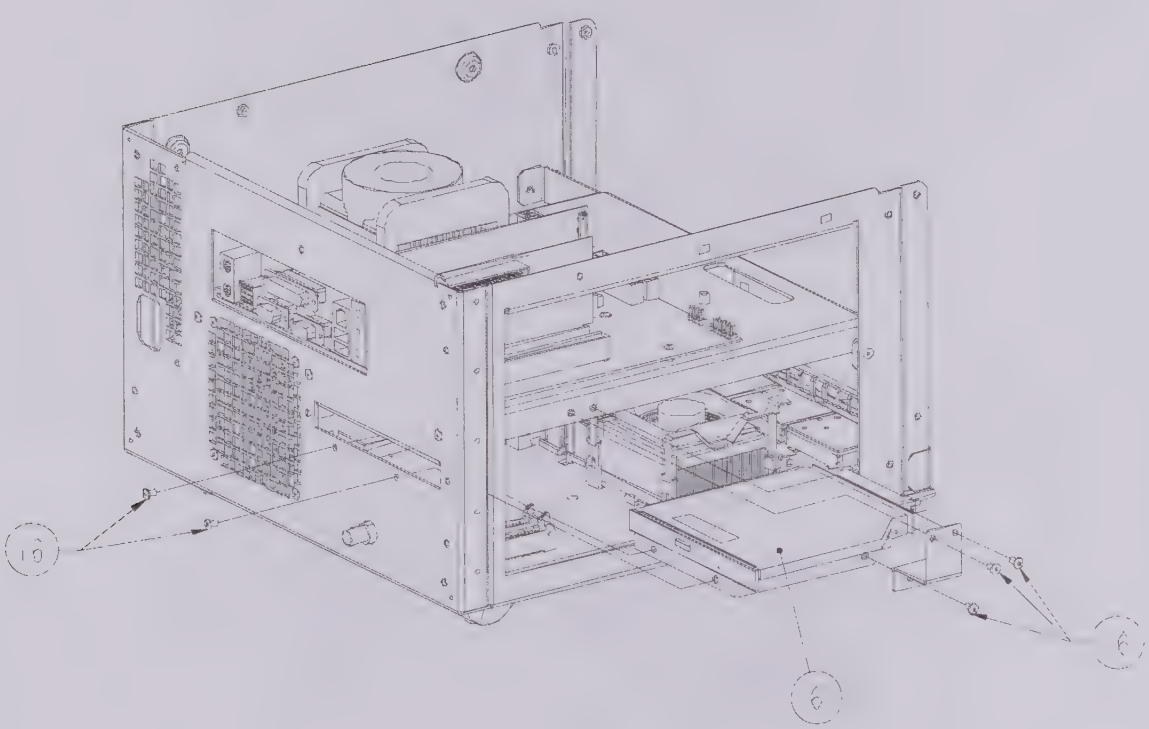

Figure 8-12 CD ROM Drive Assembly Installation

Item	LeCroy Part Number	Qty	Description
6	See Fig 8-10	1	CD Reader Assy
6	See Fig 8-10	1	CD R/W Option
16	561632604	5	Screw TX Pan #6-32 UNC 1/4" S3

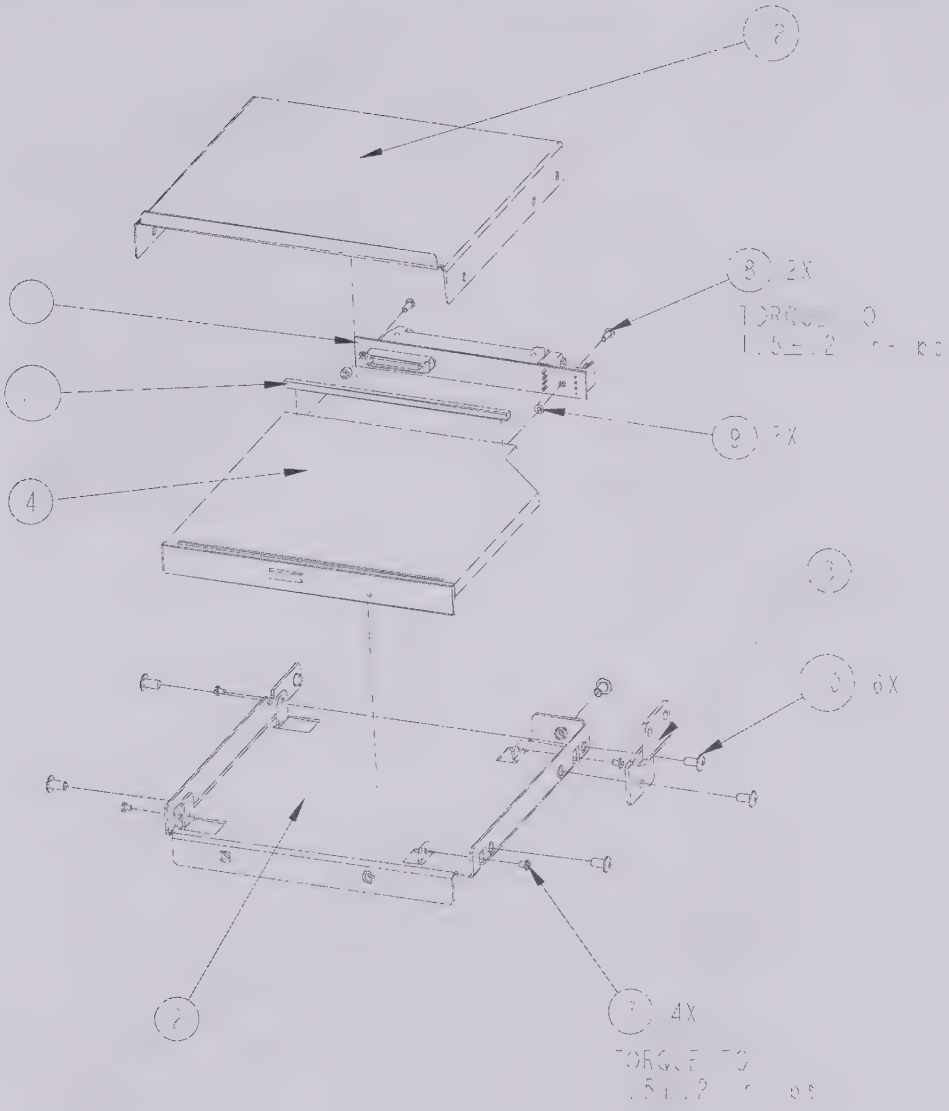

Figure 8-13 CD ROM Assembly

Item	LeCroy Part Number	Qty	Description
1	901504-00	1	CDROM Adapter PCA
2	901856-00	1	CD-ROM BRACKET
3	901858-00	1	CD-ROM Mounting Bracket
4	330000033	1	CD-R Drive
4	335830015	1	CD-R/W Drive 24x Speed Half-Ht
7	563420003	4	SCREW TX PAN M2-0.4 X 3MM S1
8	563460006	2	SCREW TX PAN M2X0.4-6MM S1
9	900517-00	2	Retaining Spacer M2 2.85mm Ion
10	561632604	6	Screw TX Pan #6-32 UNC 1/4" S3
11	350480007	1	Gasket, EMI Fabric 3X3MMX3.9IN
12	901857-00	1	CD-ROM EMI COVER

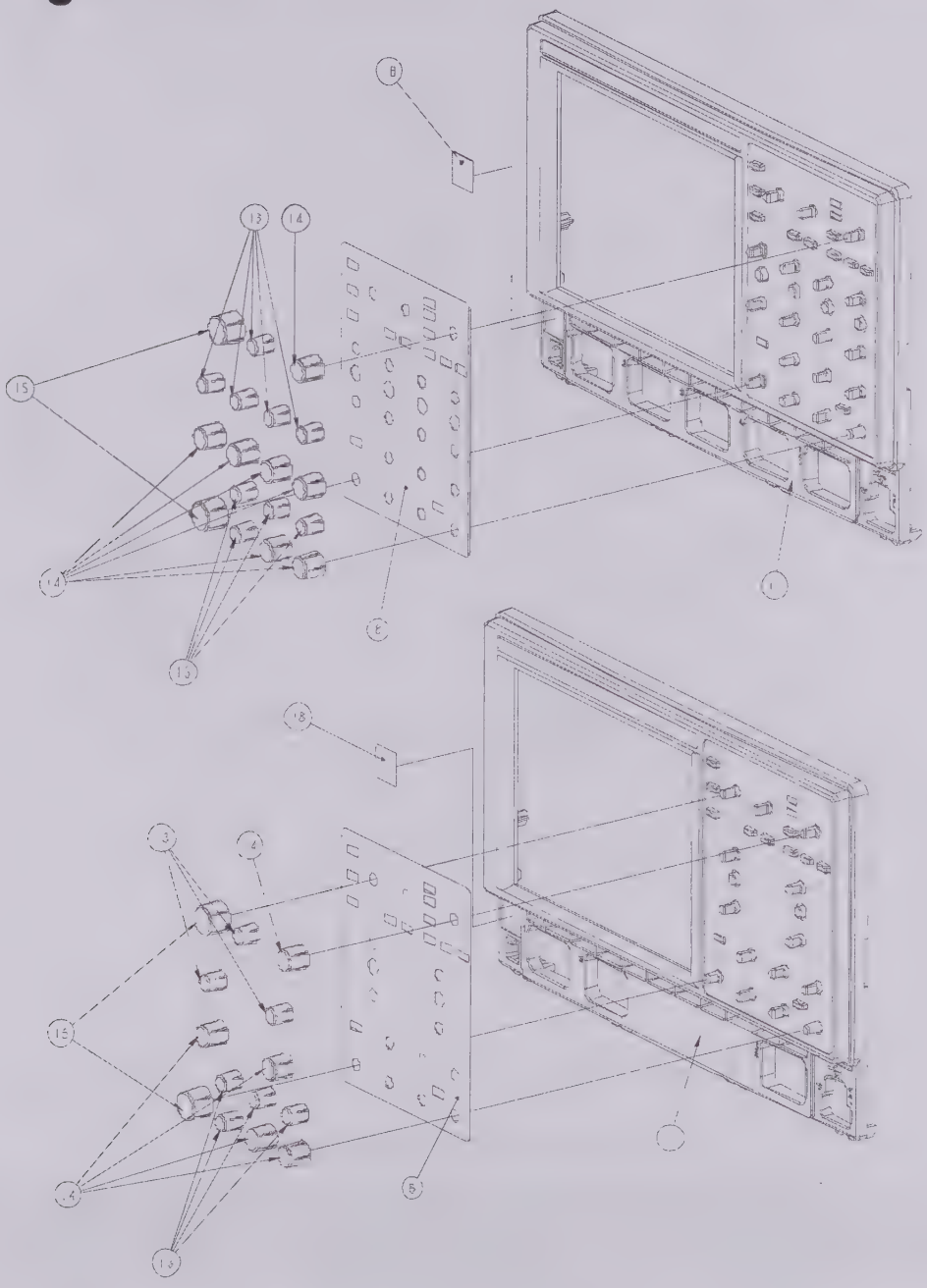

Figure 8-14 Two and Four Channel Front Panel Assembly

Item	LeCroy Part Number	Qty	Description
8	901489-00	1	WaveRunner 4 channel Front Panel Overlay
9	901756-00	1	WaveRunner 2 channel Bezel
10	901757-00	1	WaveRunner 2 channel Front Panel Overlay
11	901444-00	1	WaveRunner 4 channel Bezel
13	901582-00	7	Knob small
14	901583-00	5	Knob medium
15	901584-00	2	Knob large
18	901700-00	1	WaveRunner Input Overlay

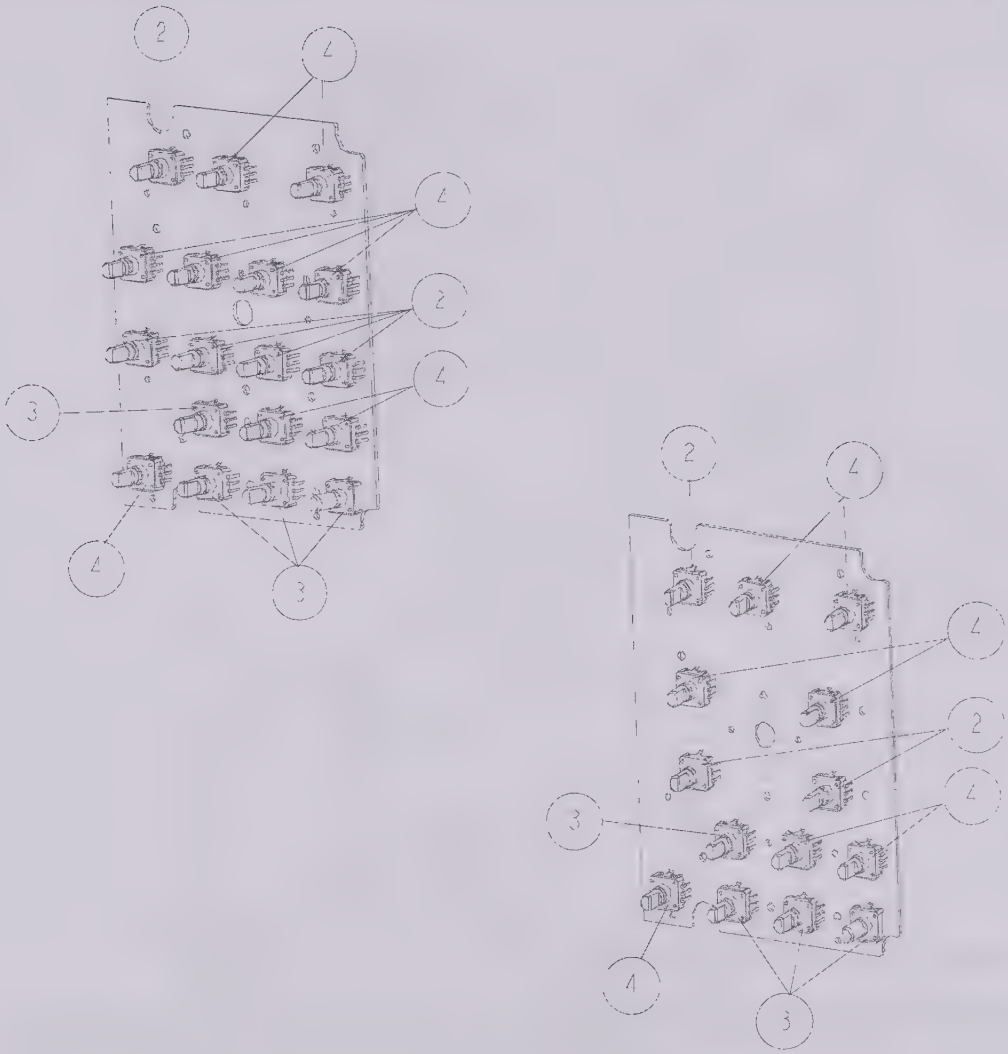

Figure 8-15 Two and Four Channel Front Panel Encoders

Item	LeCroy Part Number	Qty	Description
2	425100007	8	Encoder 20mm Detent
3	425100009	8	Encoder 20mm Detent Jog
4	425100010	16	Encoder 20mm Detent Jog Push Button

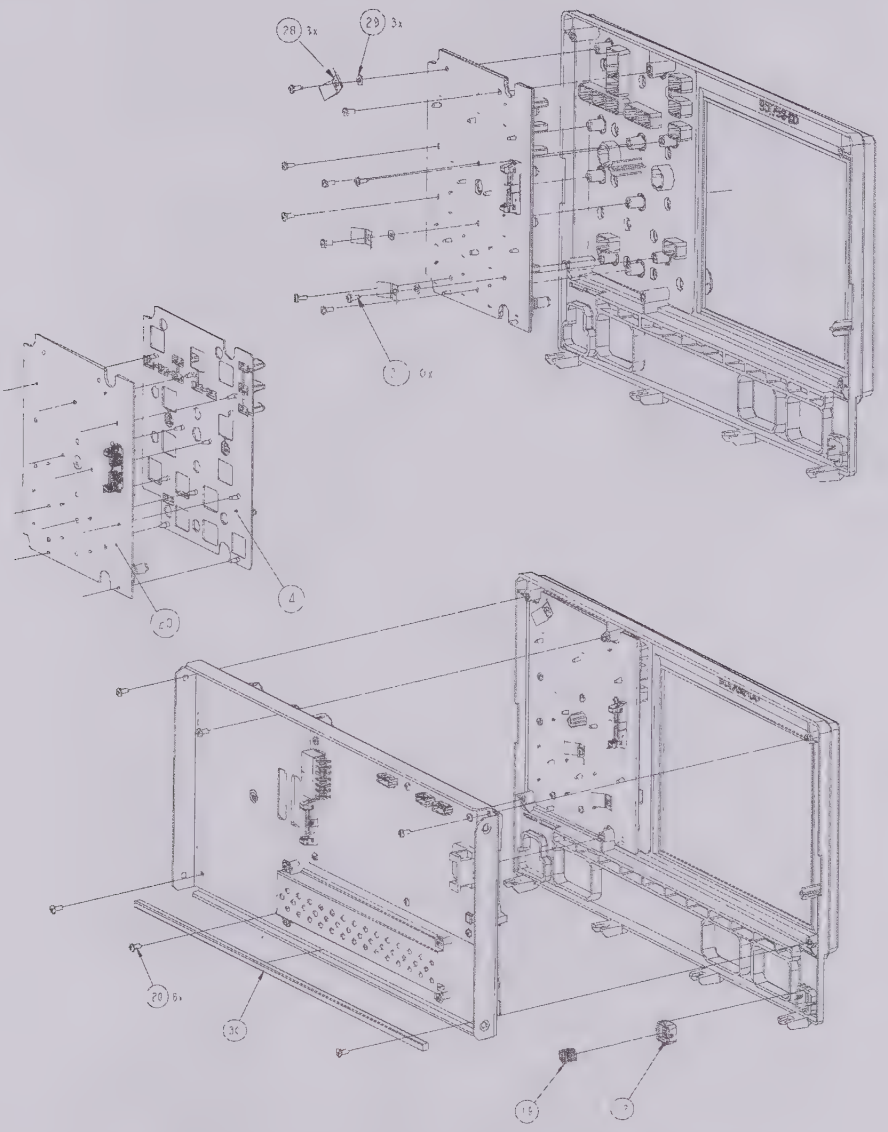

Figure 8-16 Two Channel Keypad Installation (Non "A") version

Item	LeCroy Part Number	Qty	Description
3	901740-00	1	Front Panel Assembly
4	See Figure 8-16	1	Front chassis panel assembly
5	901722-00	1	Elastomeric Keymat for 2 Channel Front Panel
11	901756-00	1	2 Channel Bezel
12	901445-00	1	Power button
19	544220007	1	Spring Compression 0.34L
20	561440404	8	Screw TX Pan #4-40 UNC 1/4 in
21	563425006	9	Screw TX Pan M2.5X0.4-6MM S1
28	530009005	3	Shield (RFI/EMI) Finger Stock
29	575100004	3	Washer Flat M2.5 6mmOD .5mmS
30	350187001	1	Gasket Ultra Soft Knit 13 in

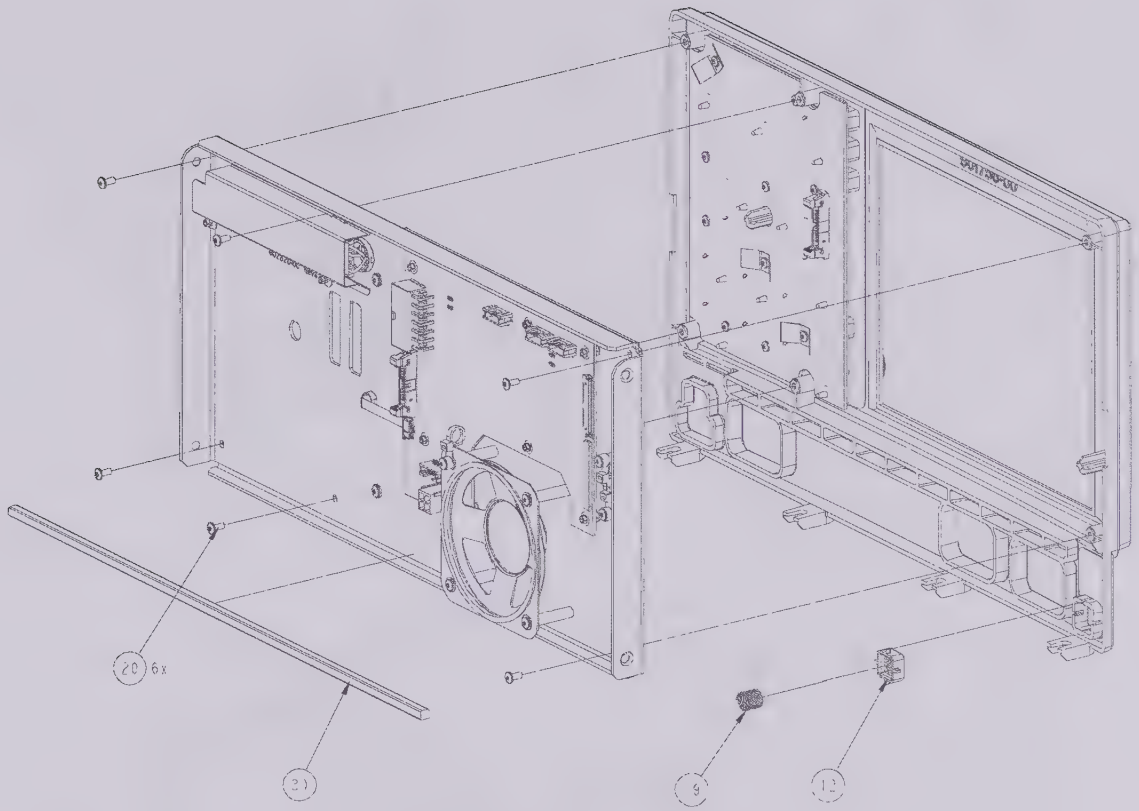

Figure 8-17 Two Channel Keypad Installation ("A") version

Item	LeCroy Part Number	Qty	Description
3	901740-00	1	Front Panel Assembly
4	See Figure 8-16	1	Front chassis panel assembly
5	901722-00	1	Elastomeric Keymat for 2 Channel Front Panel
11	901756-00	1	2 Channel Bezel
12	901445-00	1	Power button
19	544220007	1	Spring Compression 0.34L
20	561440404	8	Screw TX Pan #4-40 UNC 1/4 in
21	563425006	9	Screw TX Pan M2.5X0.4-6MM S1
28	530009005	3	Shield (RFI/EMI) Finger Stock
29	575100004	3	Washer Flat M2.5 6mmOD .5mmS
30	350187001	1	Gasket Ultra Soft Knit 13 in

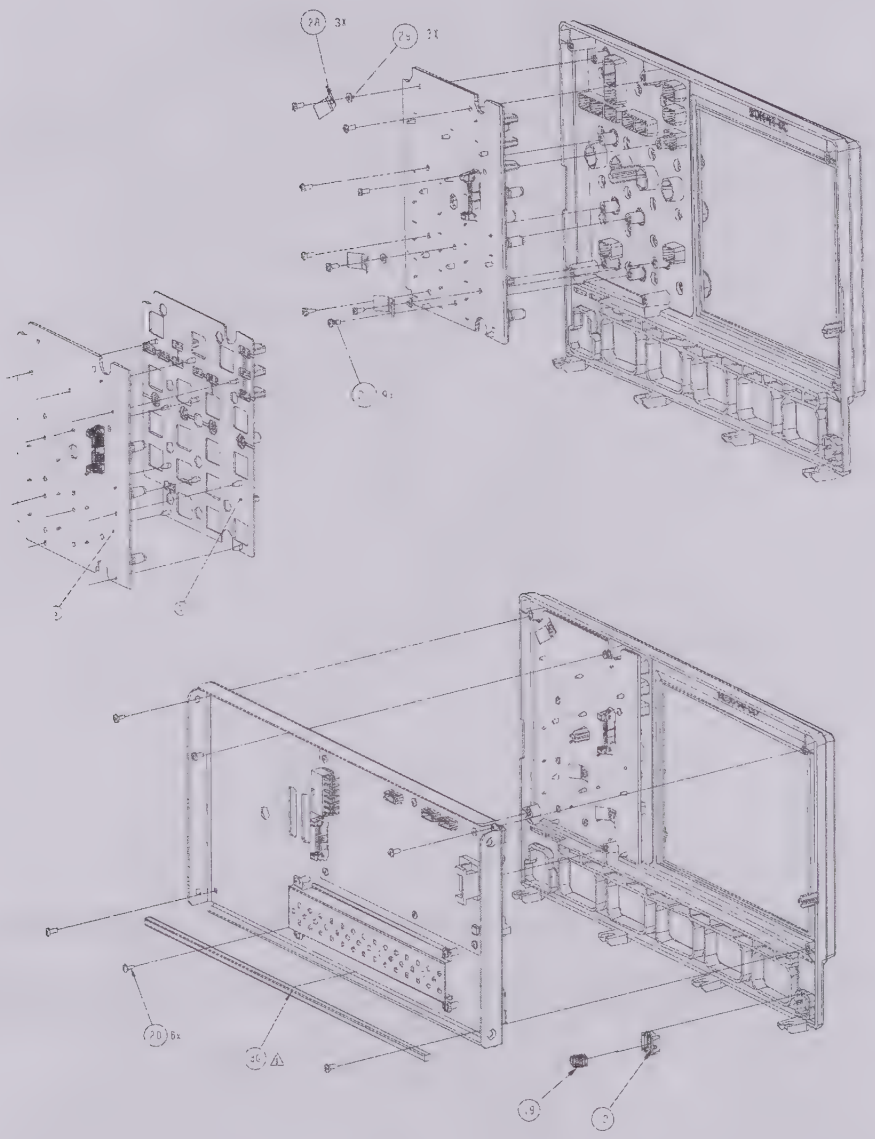

Figure 8-18 Four Channel Keypad Installation (Non "A" Version)

Item	LeCroy Part Number	Qty	Description
3	900896-00	1	Front Panel Assembly
4	See Figure 8-16	1	Front chassis panel assembly
5	901433-00	1	Elastomeric Keymat for Front Panel
11	901444-00	1	4 Channel Bezel
12	901445-00	1	Power button
19	544220007	1	Spring Compression 0.34L
20	561440404	8	Screw TX Pan #4-40 UNC 1/4 in
21	563425006	9	Screw TX Pan M2.5X0.4-6MM S1
28	530009005	3	Shield (RFI/EMI) Finger Stock
29	575100004	3	Washer Flat M2.5 6mmOD .5mmS
30	350187001	1	Gasket Ultra Soft Knit 13 in

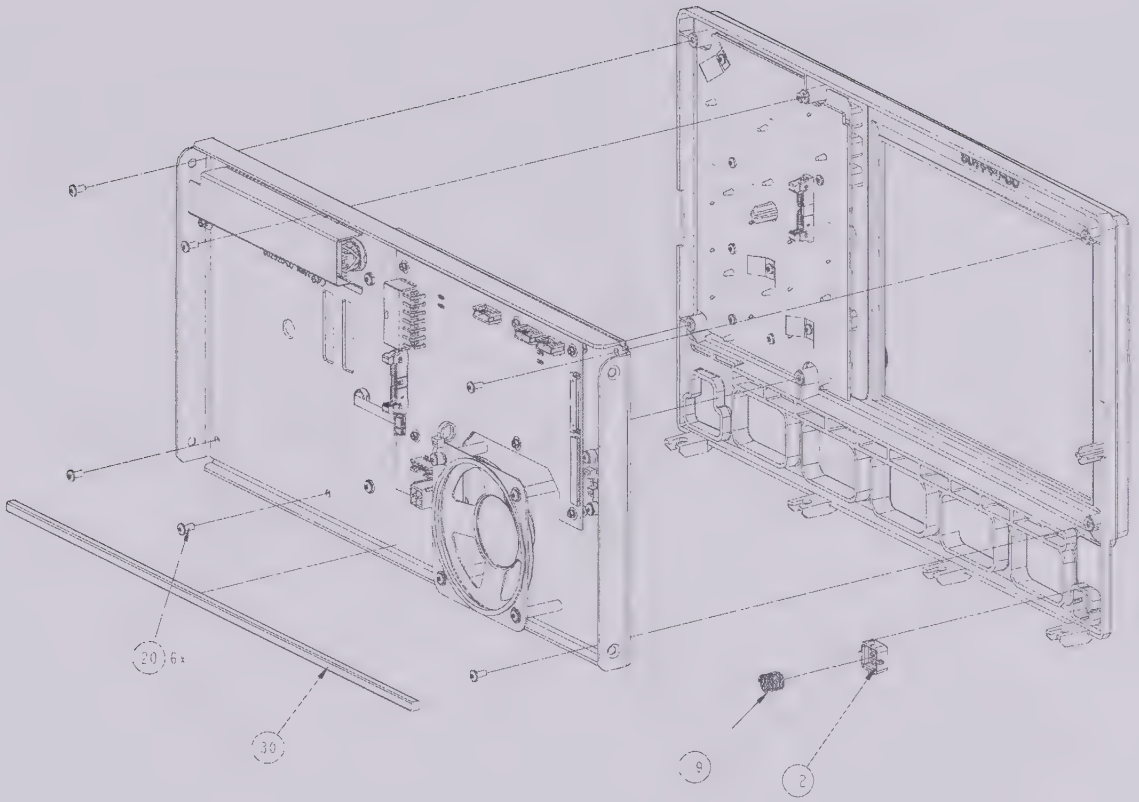

Figure 8-19 Four Channel Keypad Installation ("A" Version)

Item	LeCroy Part Number	Qty	Description
3	900896-00	1	Front Panel Assembly
4	See Figure 8-16	1	Front chassis panel assembly
5	901433-00	1	Elastomeric Keymat for Front Panel
11	901444-00	1	4 Channel Bezel
12	901445-00	1	Power button
19	544220007	1	Spring Compression 0.34L
20	561440404	8	Screw TX Pan #4-40 UNC 1/4 in
21	563425006	9	Screw TX Pan M2.5X0.4-6MM S1
28	530009005	3	Shield (RFI/EMI) Finger Stock
29	575100004	3	Washer Flat M2.5 6mmOD .5mmS
30	350187001	1	Gasket Ultra Soft Knit 13 in

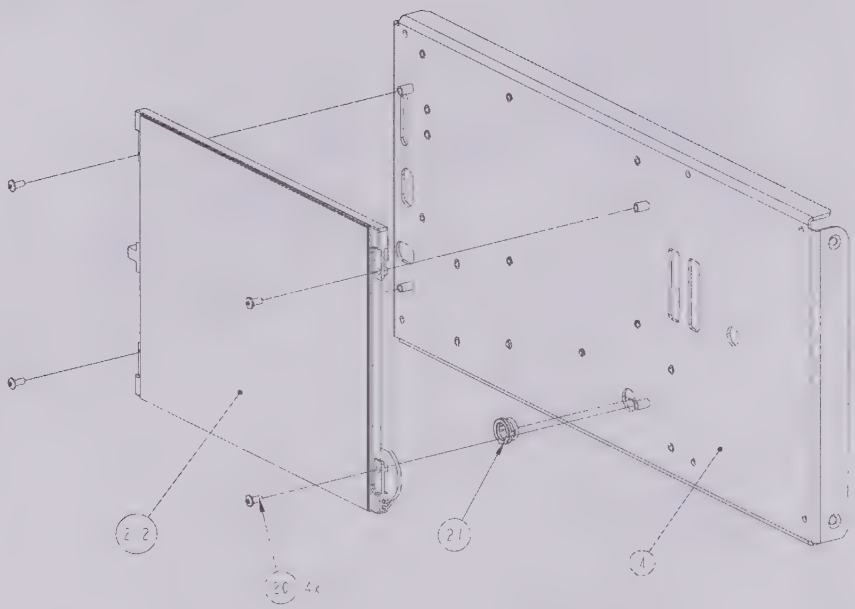

Figure 8-20 TFT Installation (Non "A" Version)

Item	LeCroy Part Number	Qty	Description
2	258000008	1	TFT & Touchscreen Assembly
4	901279-00	1	Front Chassis Panel Assembly
20	561440404	4	Screw TX PAN 4# -40UNF 1/4IN
27	519260001	1	Shorty Bushing ID .312 OD 7/16

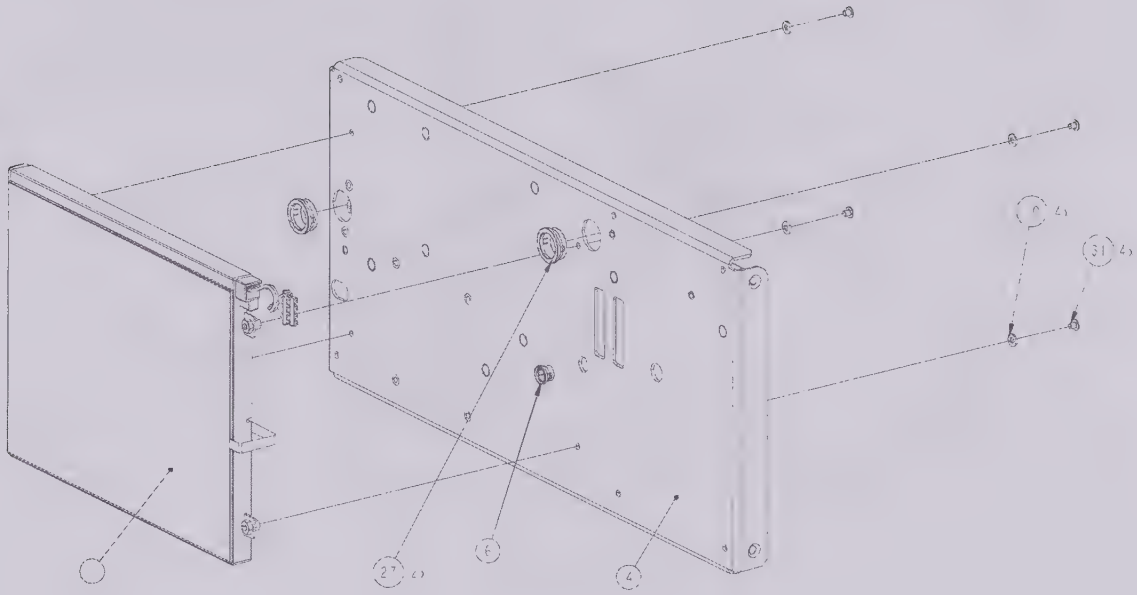

Figure 8-21 TFT Installation ("A" Version)

Item	LeCroy Part Number	Qty	Description
2	902448-00	1	TFT & Touchscreen Assembly ("A" Version)
4	902520-00	1	Front Chassis Panel Assembly
6	519260004	1	Shorty Bushing ID .250
20	561440404	4	Screw TX PAN 4# -40UNF 1/4IN
27	519260003	2	Shorty Bushing ID .500

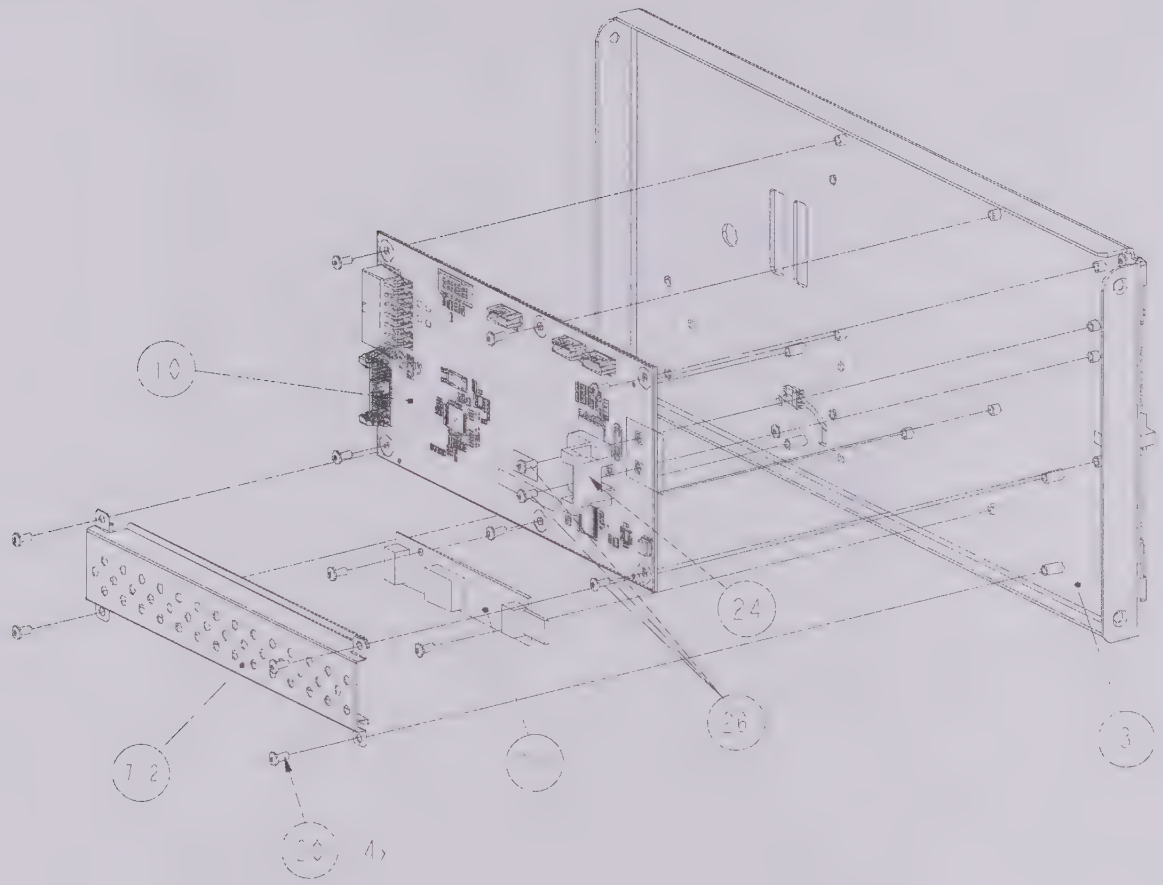

Figure 8-22 USB Hub and TFT Inverter Installation (Non "A" Version)

Item	LeCroy Part Number	Qty	Description
3	900896-00	1	Front Chassis Panel Assembly
7-1	258000007	1	Backlight Inverter
7-2	901459-00	1	Shield – Backlight Inverter
10	901851-00	1	USB Hub Board
16	901524-00	1	Cable Assy BL Power
17	901570-00	1	Cable Assy LCD Display
20	561440404	11	SCREW TX PAN 4# -40UNF 1/4IN
22	594120004	1	Cable Tie With Screw Base
24	594120010	1	Cable Tie R/A Mount 1/8" Dia
26	561440406	3	Screw TX Pan #4-40 UNF 3/8" S1

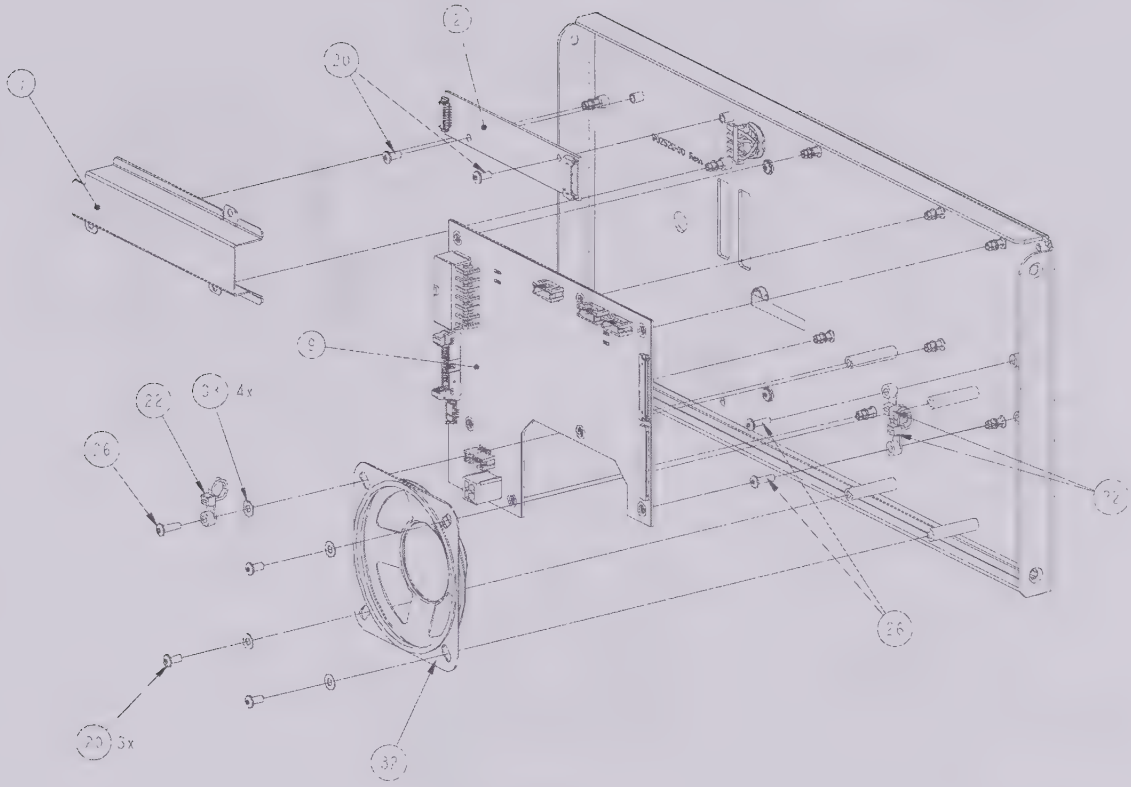

Figure 8-23 USB Hub and TFT Inverter Installation ("A" Version)

Item	LeCroy Part Number	Qty	Description
3	900896-00	1	Front Chassis Panel Assembly
7-1	258000007	1	Backlight Inverter
7-2	901459-00	1	Shield – Backlight Inverter
10	901851-00	1	USB Hub Board
16	901524-00	1	Cable Assy BL Power
17	901570-00	1	Cable Assy LCD Display
20	561440404	11	SCREW TX PAN 4# -40UNF 1/4IN
22	594120004	1	Cable Tie With Screw Base
24	594120010	1	Cable Tie R/A Mount 1/8" Dia
26	561440406	3	Screw TX Pan #4-40 UNF 3/8" S1

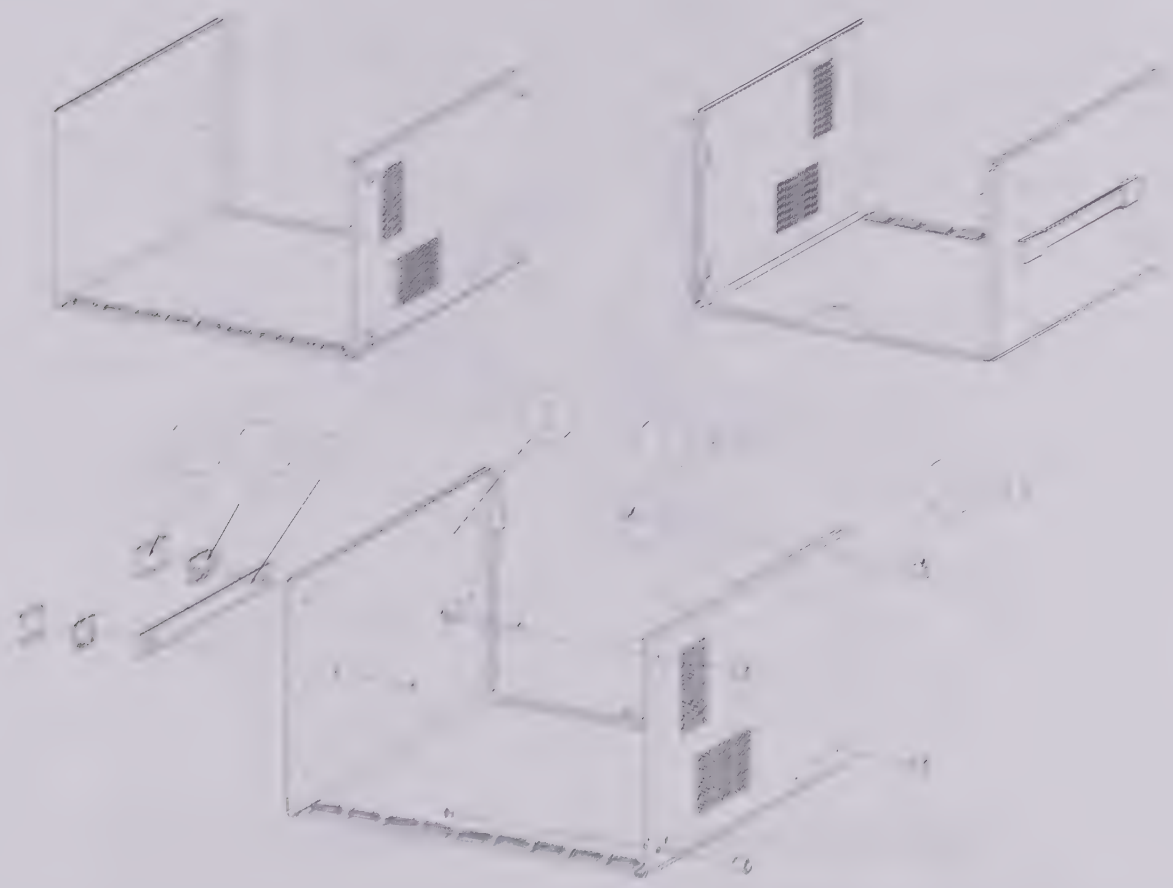

Figure 8-24 Top Cover Assembly

Item	LeCroy Part Number	Qty	Description
1	530301022	1	Handle Assembly 9" 184F
2	562632404	6	Screw TX Flat #6-32UNC 1/4" S1
3	901280-00	1	WaveRunner Chassis Top
4	901487-00	4	WaveRunner Side Foot

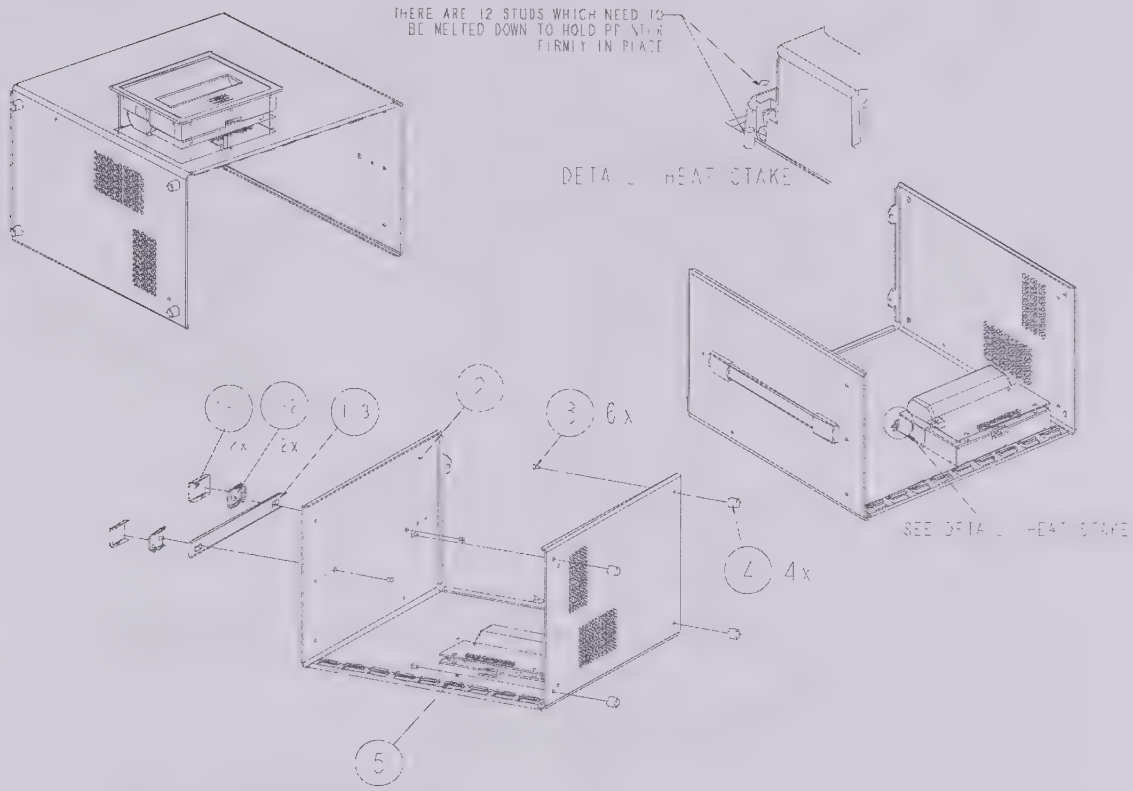

Figure 8-25 Graphics Printer Cover Assembly

Item	LeCroy Part Number	Qty	Description
1	530301022	1	Handle Assembly 9" 184F
2	901695-00	1	WaveRunner Top Cover for Printer
3	562632404	6	Screw TX Flat #6-32UNC 1/4" S1
4	901487-00	4	WaveRunner Side Foot
5	901642-00	1	WaveRunner Printer Assembly

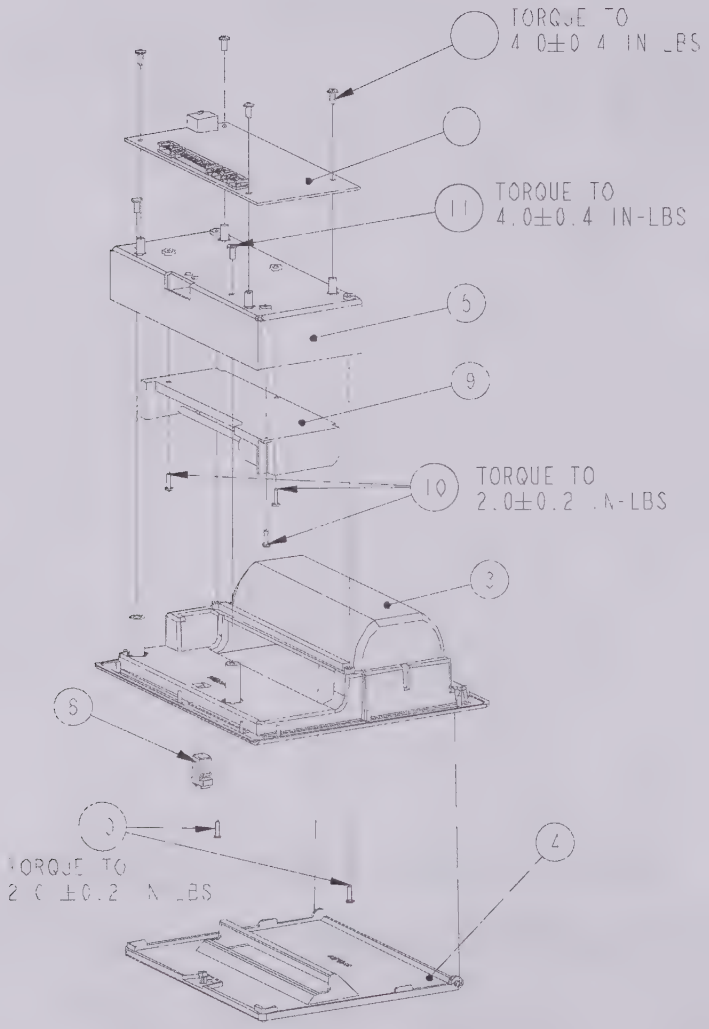

Figure 8-26 Graphics Printer Assembly

Item	LeCroy Part Number	Qty	Description
1	902259-00	1	WaveRunner6K Printer Controller PCA
2	901528-00	1	Cable Assy Printer
3	901702-00	1	WaveRunner6K PRINTER HOUSING
4	901703-00	1	WaveRunner6K PRINTER COVER
5	901704-00	1	WaveRunner6K PRINTER SUPPORT
6	350480006	1	Gasket, EMI Fab 4x4mmx5.12inch
7	350480005	8	Gasket, EMI Fab 1x3mmx2.36inch
8	530408001	1	Latch TL-304-1
9	325030001	1	Thermal Printer Mech 24V Drive
10	563620008	5	Screw TX Pan M2x0.4-8mm S3
11	561440404	6	Screw TX Pan #4-40 UNC 1/4 in
12	334000402	1	Thermal Paper For Seiko Printe
13	589200001	1	Thermal Head Cable, Printer
14	594120006	2	Tiewrap

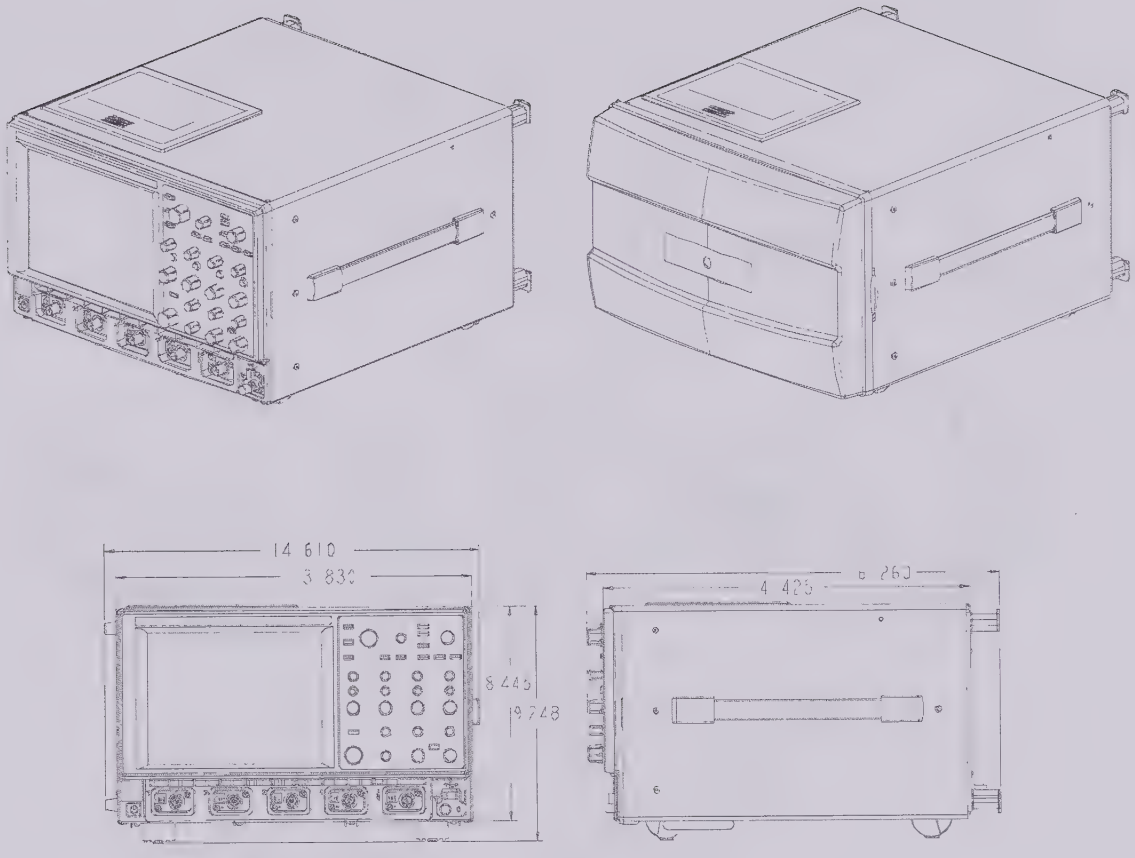

Figure 8-27 Dimensions

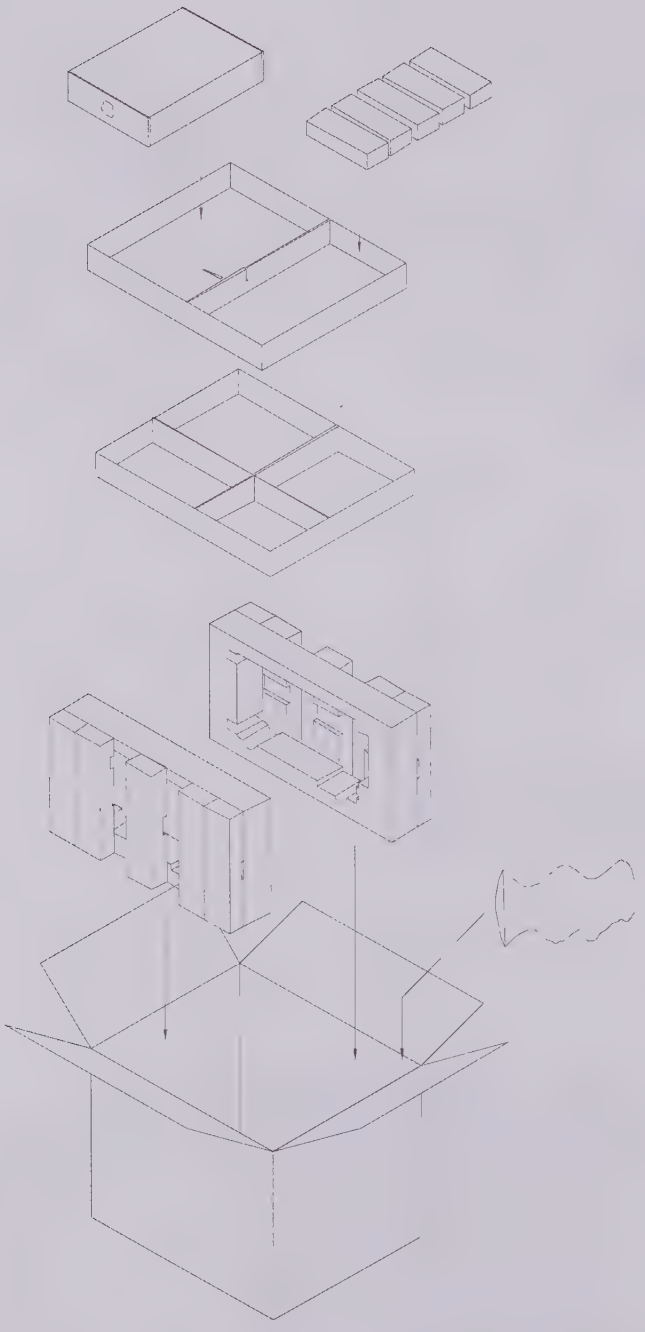

Figure 8-28 Packing

LeCroy Part Number	Description
901878-00	Shipping Package Assy

8. Mechanical Parts

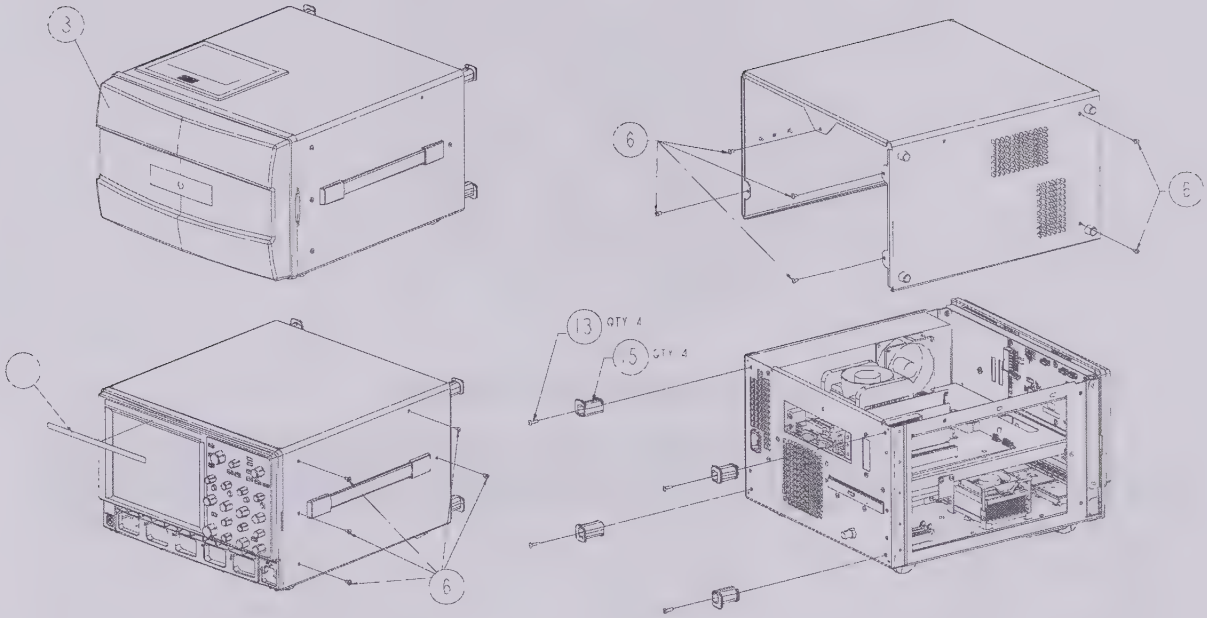

Figure 8-1: WaveRunner Top Cover Removal

Item	LeCroy Part Number	Qty	Description
13	901446-00	4	Rear Foot
15	561632408	4	Screw TX Pan #6-32 UNC 1/2" S1
1	901496-03	1	Front Panel Overlay WaveRunner 6200
1	901496-00	1	Front Panel Overlay WaveRunner 6100
1	901496-01	1	Front Panel Overlay WaveRunner 6050
1	901496-02	1	Front Panel Overlay WaveRunner 6051
1	901496-04	1	Front Panel Overlay WaveRunner 6030
1	902491-00	1	Front Panel Overlay WaveRunner 6100A
1	902491-01	1	Front Panel Overlay WaveRunner 6050A
1	902491-02	1	Front Panel Overlay WaveRunner 6051A
1	902491-03	1	Front Panel Overlay WaveRunner 6030A
1	902491-04	1	Front Panel Overlay WaveRunner 6200A
6	561632604	10	Screw TX Pan #6-32 UNC 1/4" S3

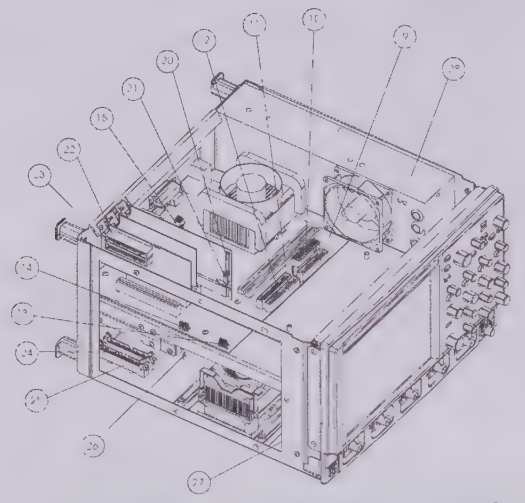

Figure 8-2 Cable Interconnections

	From		
Function	Item	Board	Connector
Front Panel keypad	1	Front Panel Encoder	U5
Front Panel keypad	2	USB Hub	P1
Power	3	USB Hub	P2
Trig/Ready LED Drive	4	USB Hub	J1
Inverter Power	5	Inverter	
Internal Printer	6	USB Hub	J23
USB 1 to 4	7	USB Hub	J3
Video	8	TFT	
Floppy Drive	9	Processor	FDD
Power	10	Processor	PS
Hard Drive	11	Processor	IDE
CD ROM Drive	12	Processor	SEC IDE
Power Switch	13	Processor	FRONT PANEL
USB Dual	14	Processor	FP USB
Power	15	Processor	J5C1
Power	16	Acquisition Board	J15
Power	17	Acquisition Board	J19
Power	18	Acquisition Board	J23
Front panel USB	19	Acquisition Board	J25
Video	20	DVO to LVDS Flat Panel	J1
Inverter Power	21	DVO to LVDS Flat Panel	J2
LVDS Data	22	PCI	J1
LVDS Data	23	PCI	J2
LVDS Data	24	Acquisition Board	J11
LVDS Data	25	Acquisition Board	J10
Trig/Ready LED Drive	26	Acquisition Board	J9000
Power Switch	27	Acquisition Board	J24
Rear Fan	Not shown	Fan	N/A
Hard Drive Power	Not shown	Not shown	
CD ROM Power	Not shown	Not shown	

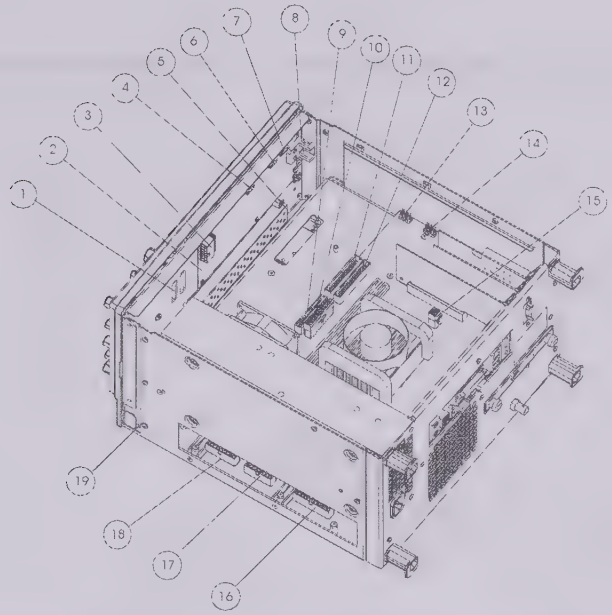

Figure 8-3 Cable Interconnections

	To		
Item	Board	Connector	Cable P/N
2	USB Hub	P1	592060001
1	Front Panel Encoder	U5	592060001
28	Power Supply	J3	N/A
26	Acquisition Board	J9000	901530-00
8	DVO to LVDS Flat Panel	J2	901524-00
Not shown	Internal Printer		
14	Processor Board	FP USB	901531-00
20	DVO to LVDS Flat Panel	J1	901527-00
N/A	Not used	N/A	N/A
28	Power Supply	J1	N/A
Not shown	Hard Drive		901526-00
Not shown	CD ROM Drive		901525-00
27	Acquisition Board	J10	901529-00
7 & 19	USB Hub, Acquisition Board	J3, J25	901531-00
28	Power Supply	J2	N/A
28	Power Supply	J5	N/A
28	Power Supply	J4	N/A
28	Power Supply	J6	N/A
14	Processor Board	FP USB	901531-00
8	TFT		901527-00
5	Inverter		901524-00
25	Acquisition Board	J10	901523-00
24	Acquisition Board	J11	901523-00
23	PCI	J2	901523-00
22	PCI	J1	901523-00
4	USB Hub	J1	901530-00
13	Processor Board	FRONT PANEL	901529-00
Not shown	Acquisition Board	J4	N/A
28	Power Supply	J7	N/A
28	Power Supply	J8	N/A

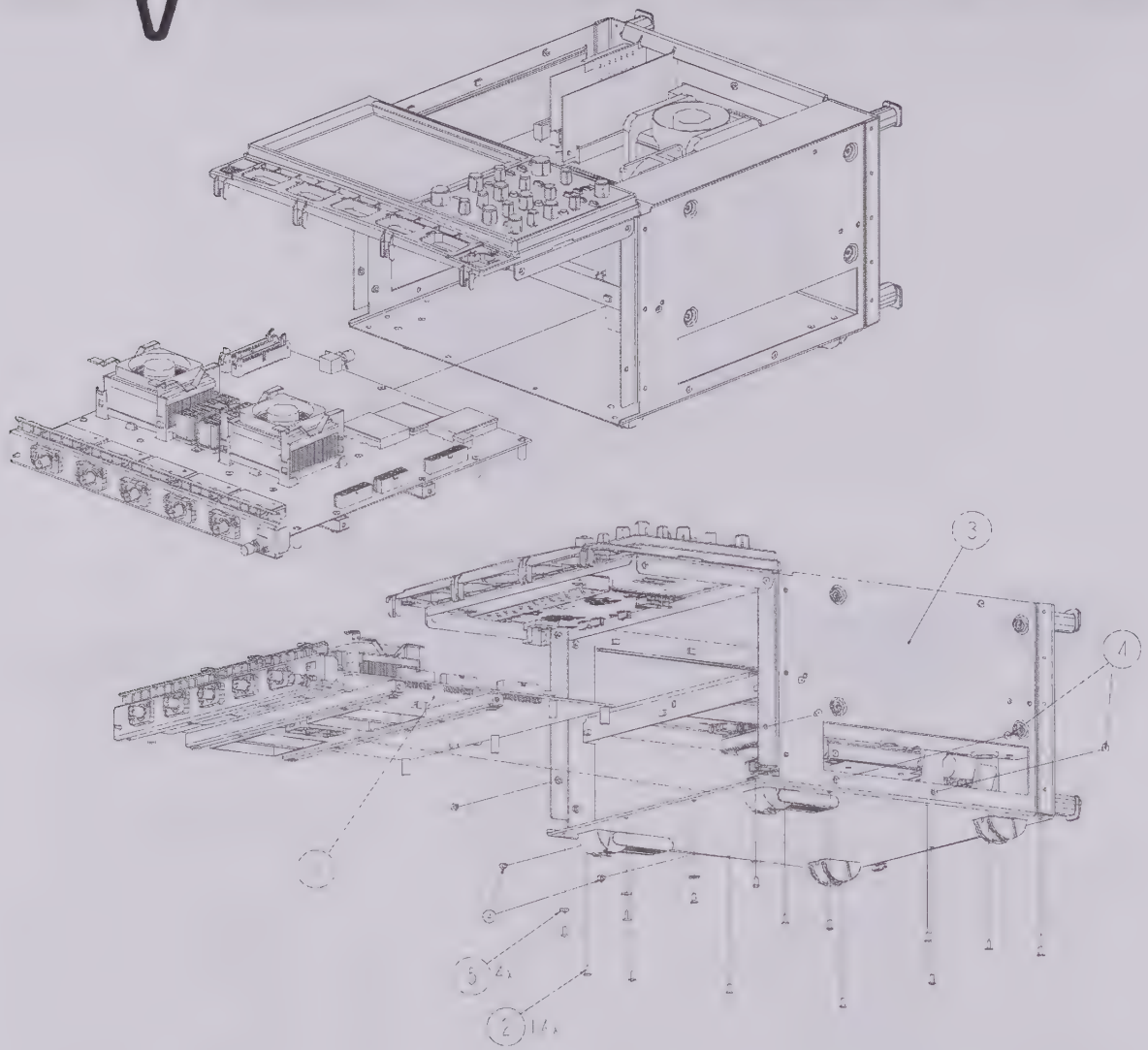

Figure 8-4 Bezel Open & Acquisition Board Installation

Item	LeCroy Part Number	Qty	Description
1	900888-00	1	2 GHz 5GS/s 4 Channel Acq System
1	901765-00	1	1 GHz 5GS/s 4 Channel Acq System
1	901764-00	1	500 MHz 5GS/s 4 Channel Acq System
1	901763-00	1	500 MHz 5GS/s 2 Channel Acq System
1	901806-00	1	350 MHz 2.5GS/s 4 Channel Acq System
1*	902600-00	1	350 MHz 2.5GS/s 4 Channel Acq System
1*	902601-00	1	500 MHz 5GS/s 2 Channel Acq System
1*	902602-00	1	500 MHz 5GS/s 4 Channel Acq System
1*	902603-00	1	1 GHz 5GS/s 4 Channel Acq System
1*	902604-00	1	2 GHz 5GS/s 4 Channel Acq System
2	561632405	14	Screw TX Pan #6-32UNC 5/16" S1
3	901277-00	1	Chassis Bottom
4	562632403	4	Screw TX Flat UCUT #6-32 3/16"
5	575610002	4	Washer Flat Reg OD Size 6

*used in WR6000 “A” series

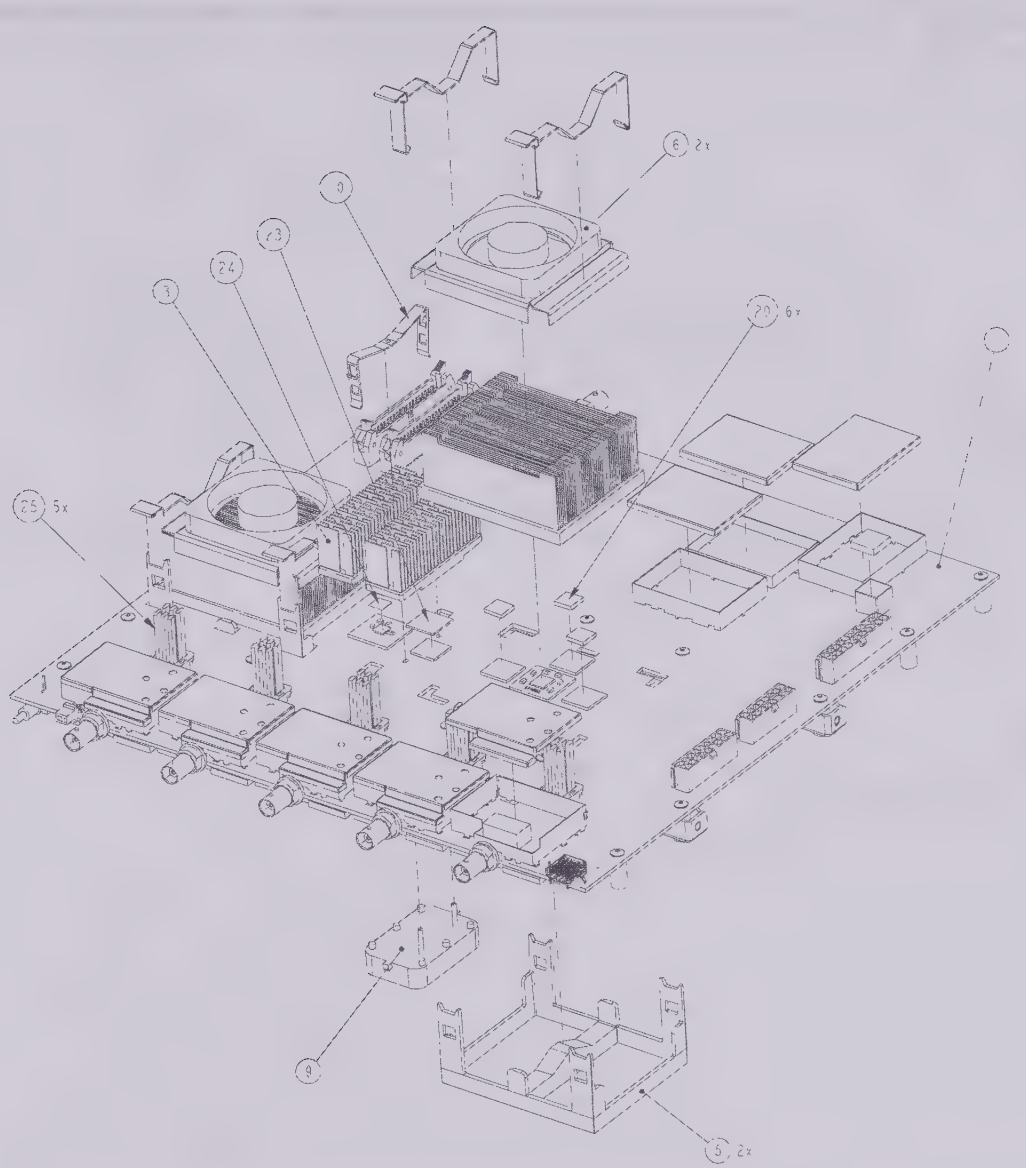

Figure 8-5 Acquisition Board Assembly (Top Side)

Item	LeCroy Part Number	Qty	Description
1		1	Printer Circuit Assembly
3	901336-00	1	Heatsink WAVERUNNER MST/MTB
5	901437-00	1	Heatsink Base - HAD
6	902530-00	1	Integrated Chip Cooler
9	901440-00	1	Heatsink Base mst/mtb
10	901441-00	1	Heatsink clip mst-mtb
20	902528-00	3	Thermal Gap Pad Die-Cut
23	901693-00	1	Gap pad MST die cut
24	901694-00	1	Gap pad HTB die cut
25	901709-00	3	Malico 30mm heat sink assy

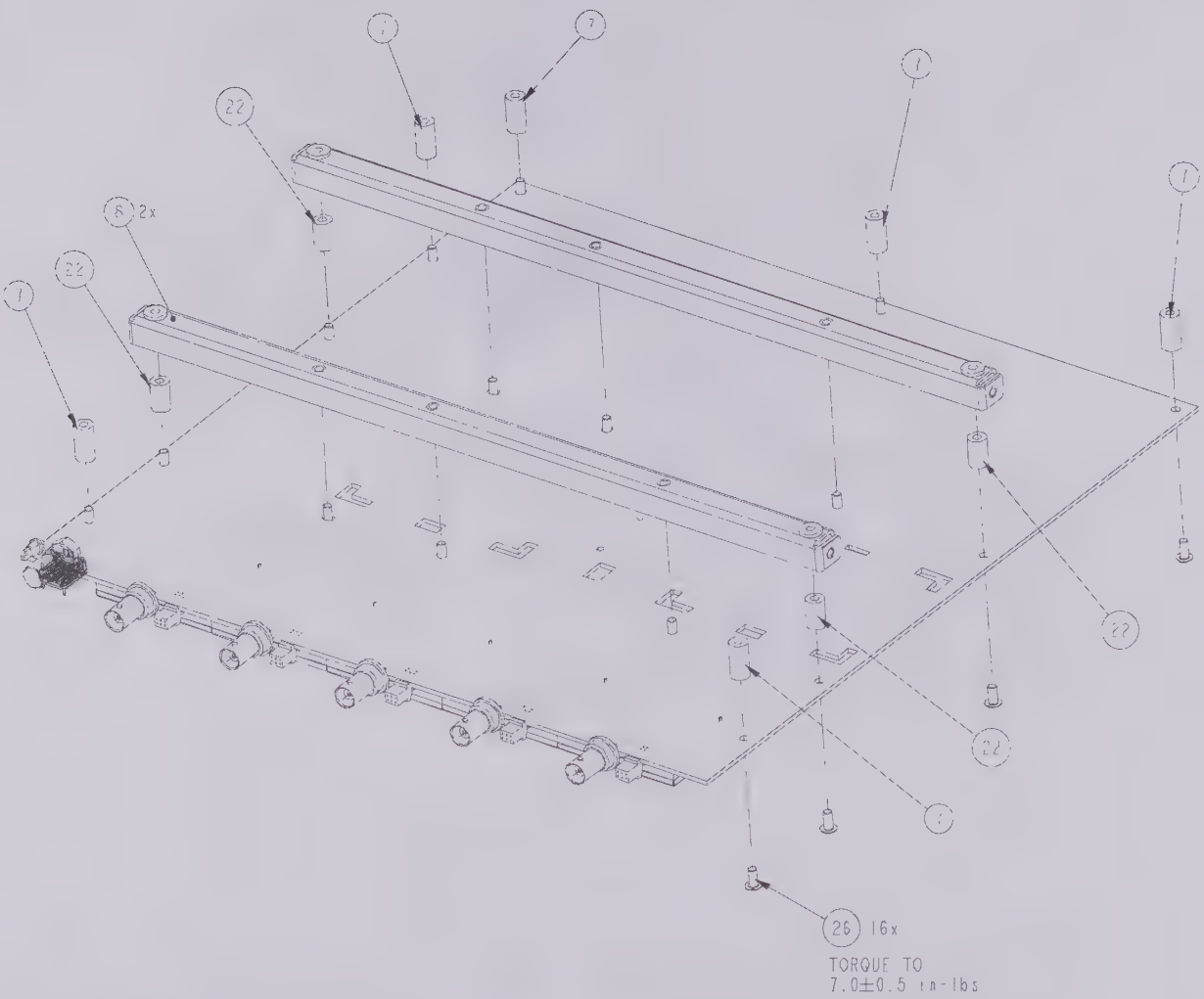

Figure 8-6 Acquisition Board Assembly (Bottom Side)

Item	LeCroy Part Number	Qty	Description
7	522632120	6	Standoff Hex 6-32X5/8 F/F
8	902463-00	2	WAVERUNNER Backbone
22	524632015	4	Standoff Hex 6-32 X 1/2 FF
26	561632405	16	Screw TX Pan #6-32UNC 5/16" S1

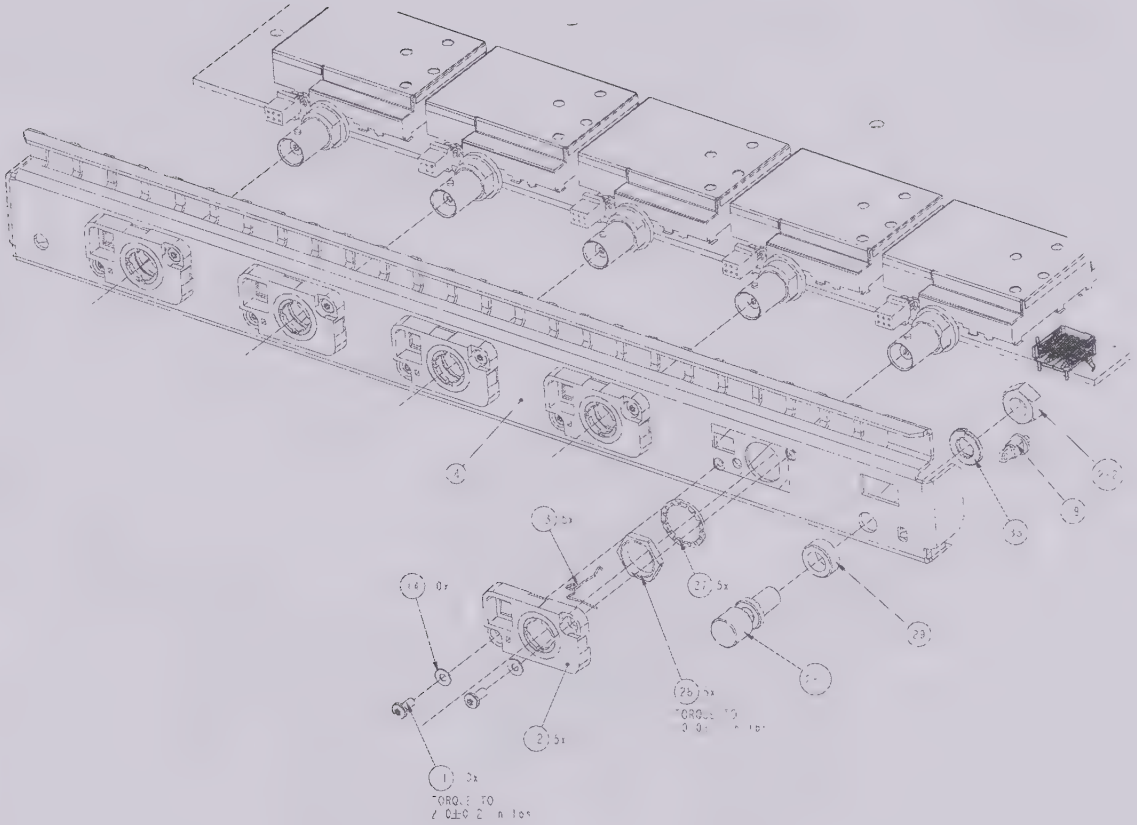

Figure 8-7 Acquisition Board Front Panel Assembly

Item	LeCroy Part Number	Qty	Description
2	469040002	1	Metal Banana Jack/Binding Post
4	901436-00	1	WAVERUNNER Front Card Panel Assy Upda
11	550011106	6	Screw Pan HD M2X6 Blk W/Nylock
12	7093XXP41	3	Probe Holder
13	7093XXP91	3	Probe Ring Contact
14	551620100	6	#2 Flat Washer S.steel/Black O
19	335970001	1	Probe Hook
27	709614301	3	BNC Lock Washer
28	709614302	3	BNC Nut
29	901807-00	1	ALUM. SPACER
33	555465002	1	Washer Lock Split 1/4

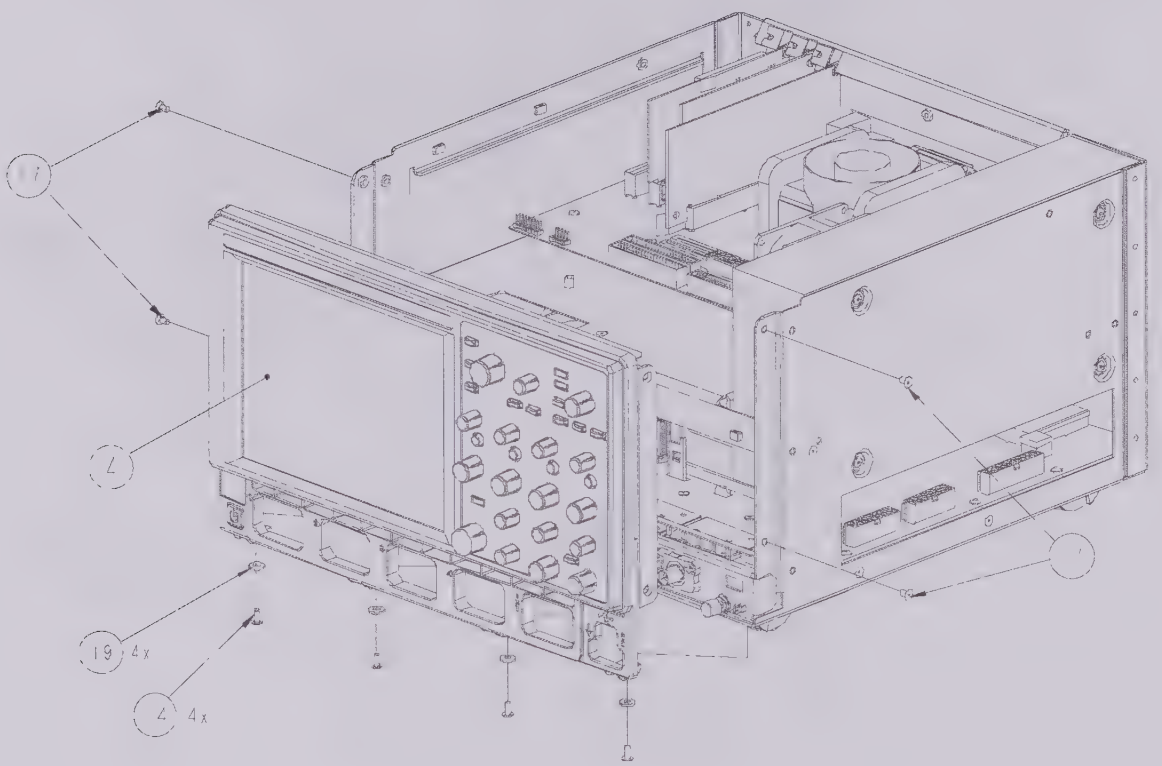

Figure 8-8 Front Frame Installation

Item	LeCroy Part Number	Qty	Description
4	See Fig 8-8 – 8-12	1	2 Channel Front Frame
4	See Fig 8-8 – 8-12	1	4 Channel Front Frame
14	561632405	4	Screw TX Pan #6-32UNC 5/16" S1
17	561632403	4	Screw TX Flat UCUT #6-32 3/16"
19	575610002	4	Washer Flat Reg OD Size 6

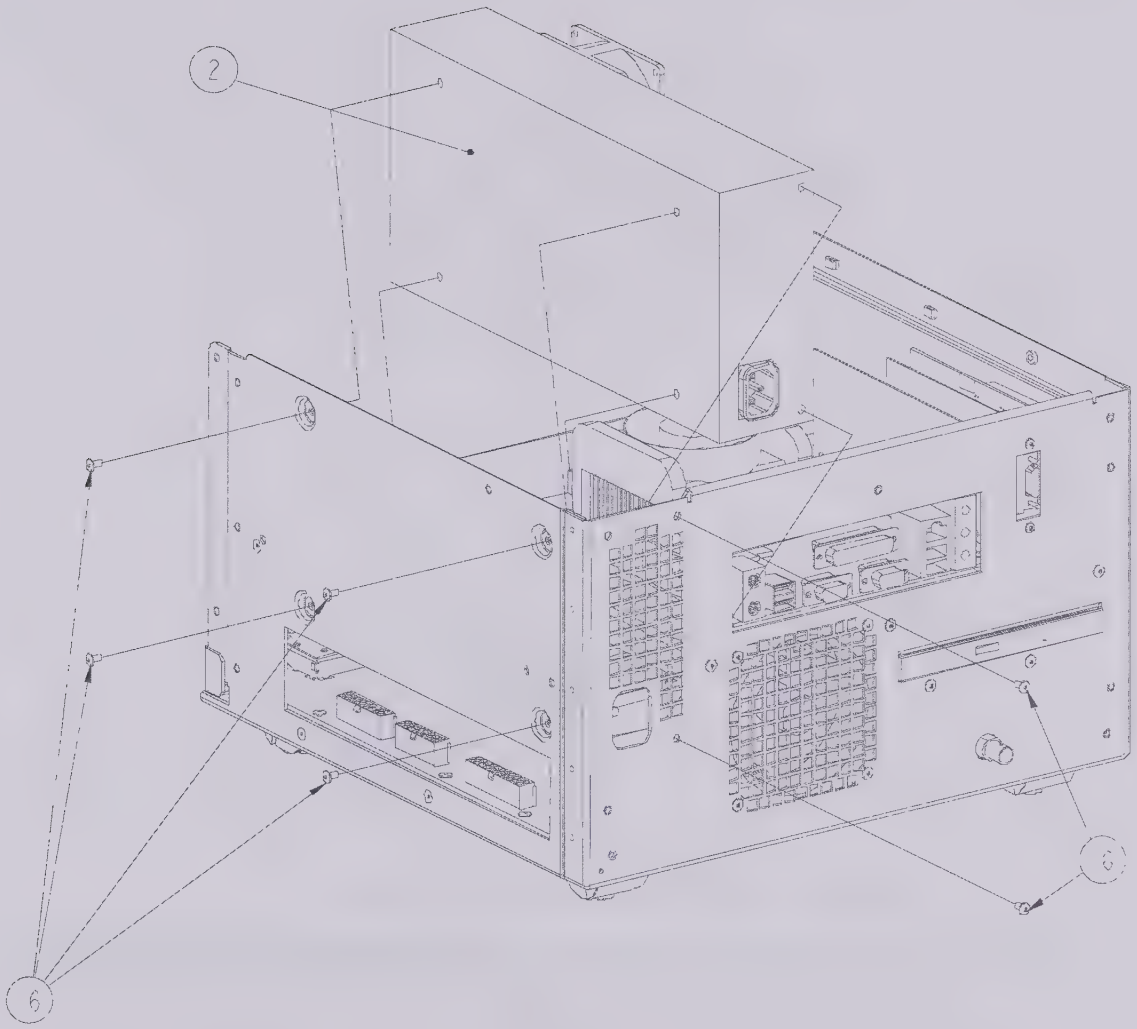

Figure 8-9 Power Supply Installation

Item	LeCroy Part Number	Qty	Description
2	900893-00	1	Waverunner Power Supply Module
16	561632604	6	Screw TX Pan #6-32 UNC 1/4" S3

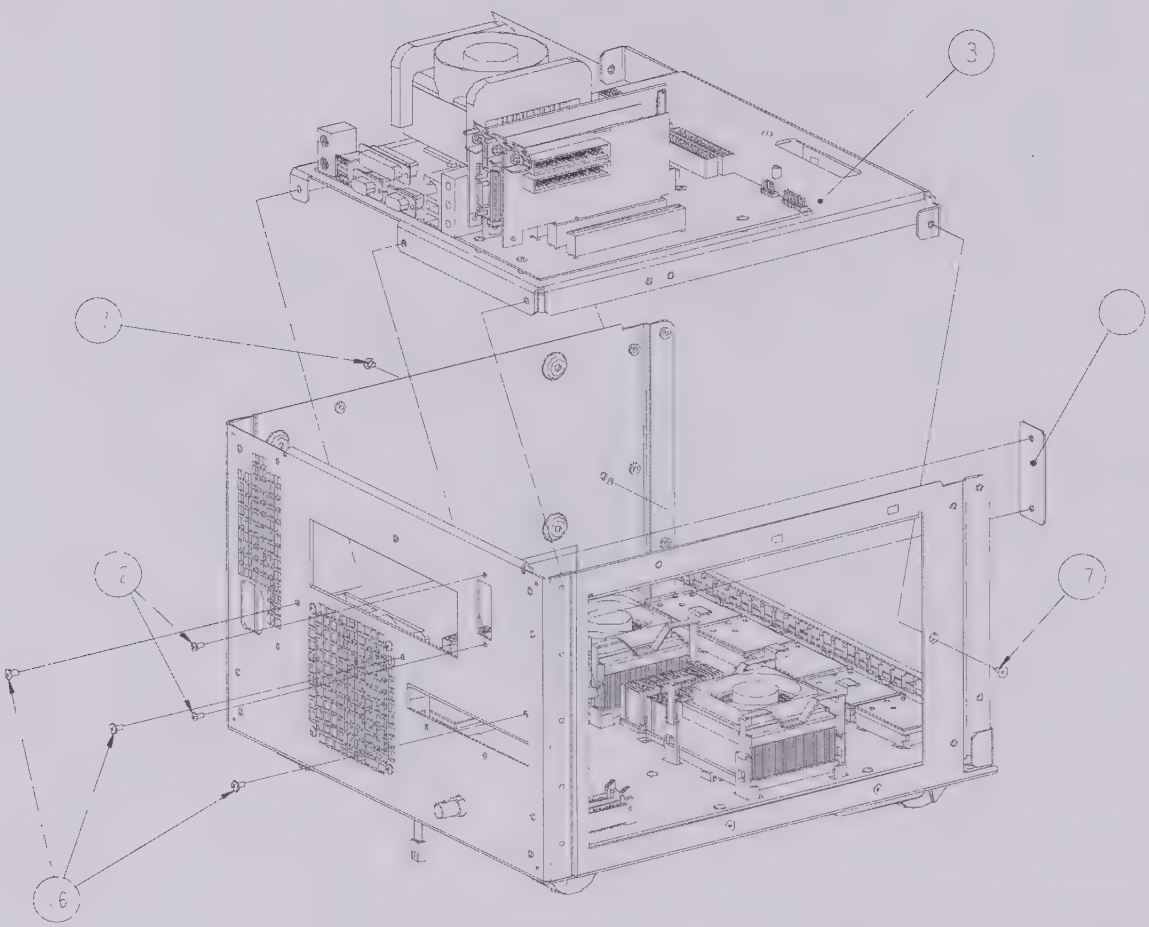

Figure 8-10 Processor Assembly Installation

Item	LeCroy Part Number	Qty	Description
3	See Fig 8-8	1	Complete Computer System Tray Assy
11	901880-00	1	GPIB Blanking Plate
12	561440040	2	Screw TX PAN 4# -40UNF 1/4IN
16	561632604	3	Screw TX Pan #6-32 UNC 1/4" S3
17	562632403	2	Screw TX Flat UCUT #6-32 3/16"

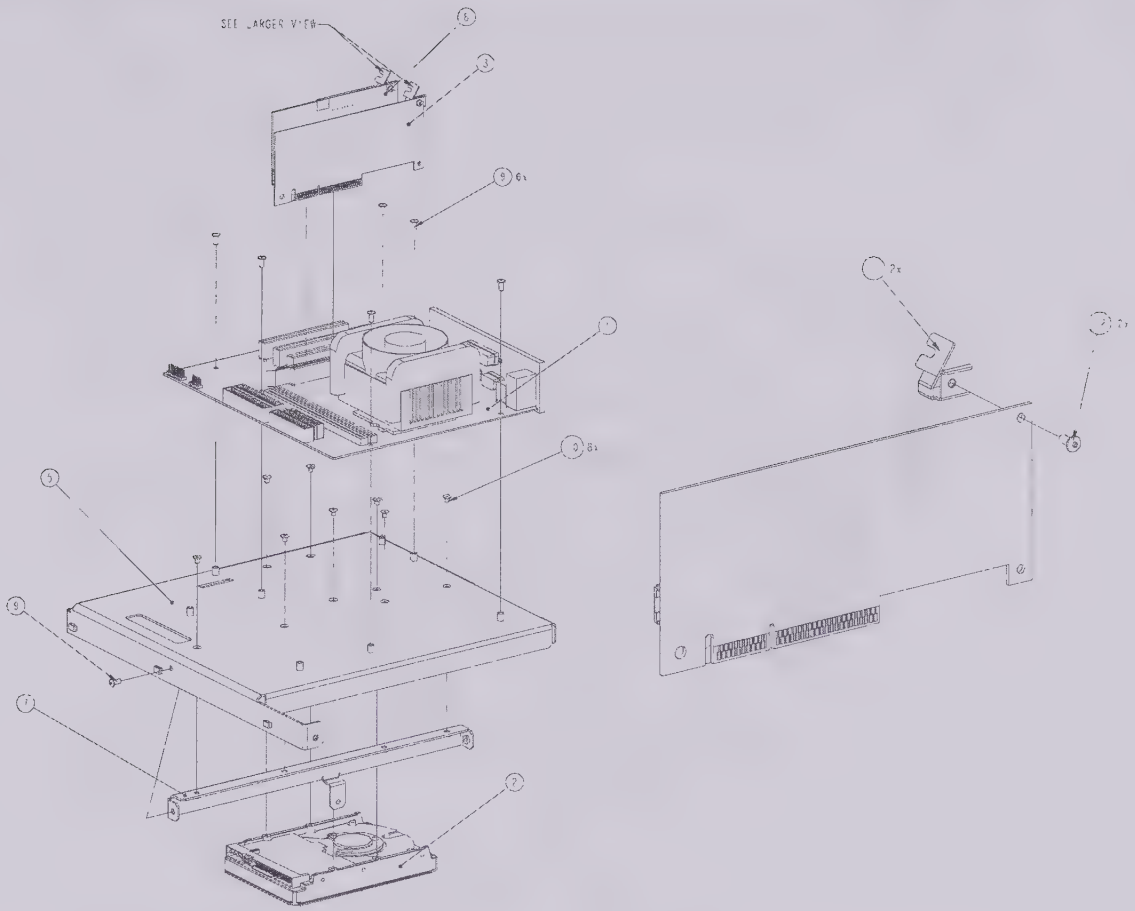

Figure 8-11 Processor Tray Assembly

Item	LeCroy Part Number	Qty	Description
1	334600003	1	Motherboard P4 uATX (shipped in units S/N LCRY0603Pxxxxx & LCRY0604Pxxxxx
	334600002	1	Motherboard P4 uATX (shipped in units S/N LCRY0601Pxxxxx & LCRY0602Pxxxxx
2	330000005	1	40Gb 7200 RPM Hard Drive
3	901949-00	1	AGP/DVO Interface
3*	902572-00	1	AGP/DVO Interface
5	901278-00	1	Motherboard Support Tray
7	901647-00	1	Stiffener Rib
8	900890-00	1	PCI Interface
9	561632405	7	Screw TX Pan #6-32UNC 5/16" S1
10	562632403	8	Screw TX Flat UCUT #6-32 3/16"
	227500017	1	Celeron 1.7GHz for MotherBoard 334600002
	227500020	1	Celeron 2.0GHz for MotherBoard 334600003
	902530-00	1	Integrated Cooler
	334740001	1	256MB
	334740002	1	512MB

*used in WaveRunner 6000 A series

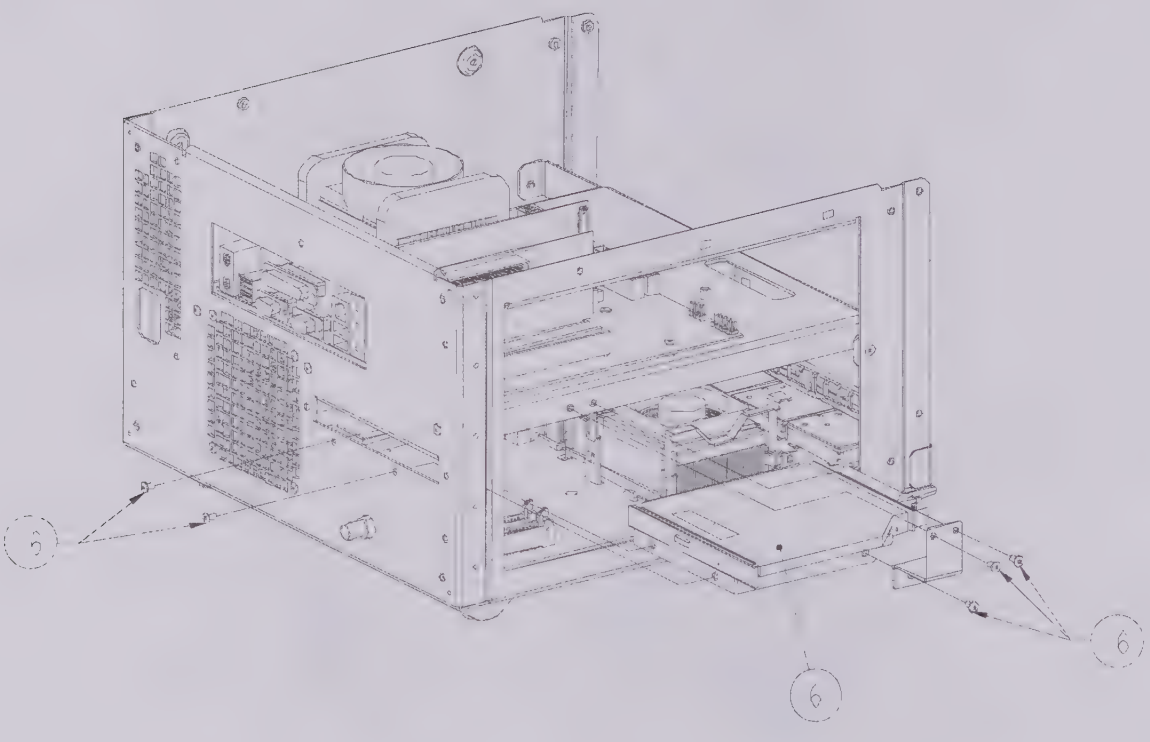

Figure 8-12 CD ROM Drive Assembly Installation

Item	LeCroy Part Number	Qty	Description
6	See Fig 8-10	1	CD Reader Assy
6	See Fig 8-10	1	CD R/W Option
16	561632604	5	Screw TX Pan #6-32 UNC 1/4" S3

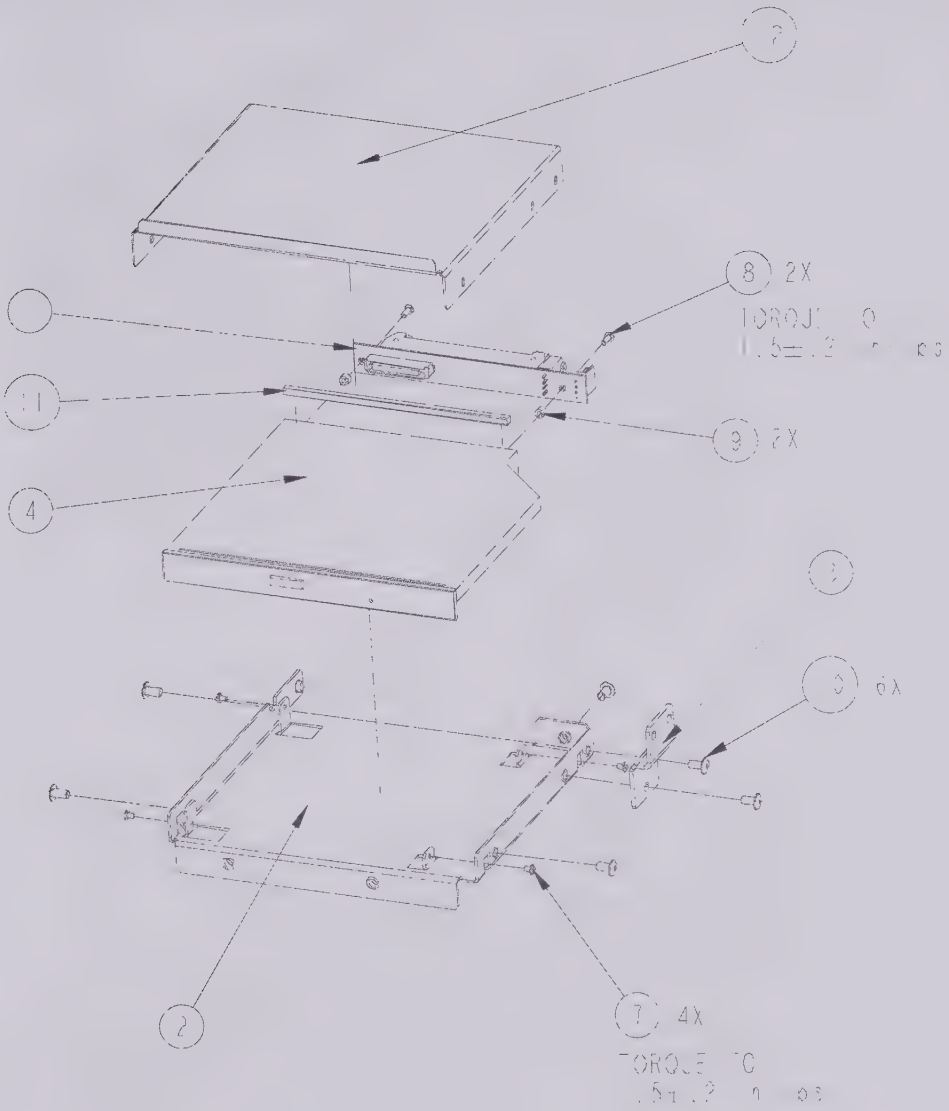

Figure 8-13 CD ROM Assembly

Item	LeCroy Part Number	Qty	Description
1	901504-00	1	CDROM Adapter PCA
2	901856-00	1	CD-ROM BRACKET
3	901858-00	1	CD-ROM Mounting Bracket
4	330000033	1	CD-R Drive
4	335830015	1	CD-R/W Drive 24x Speed Half-Ht
7	563420003	4	SCREW TX PAN M2-0.4 X 3MM S1
8	563460006	2	SCREW TX PAN M2X0.4-6MM S1
9	900517-00	2	Retaining Spacer M2 2.85mm lon
10	561632604	6	Screw TX Pan #6-32 UNC 1/4" S3
11	350480007	1	Gasket, EMI Fabric 3X3MMX3.9IN
12	901857-00	1	CD-ROM EMI COVER

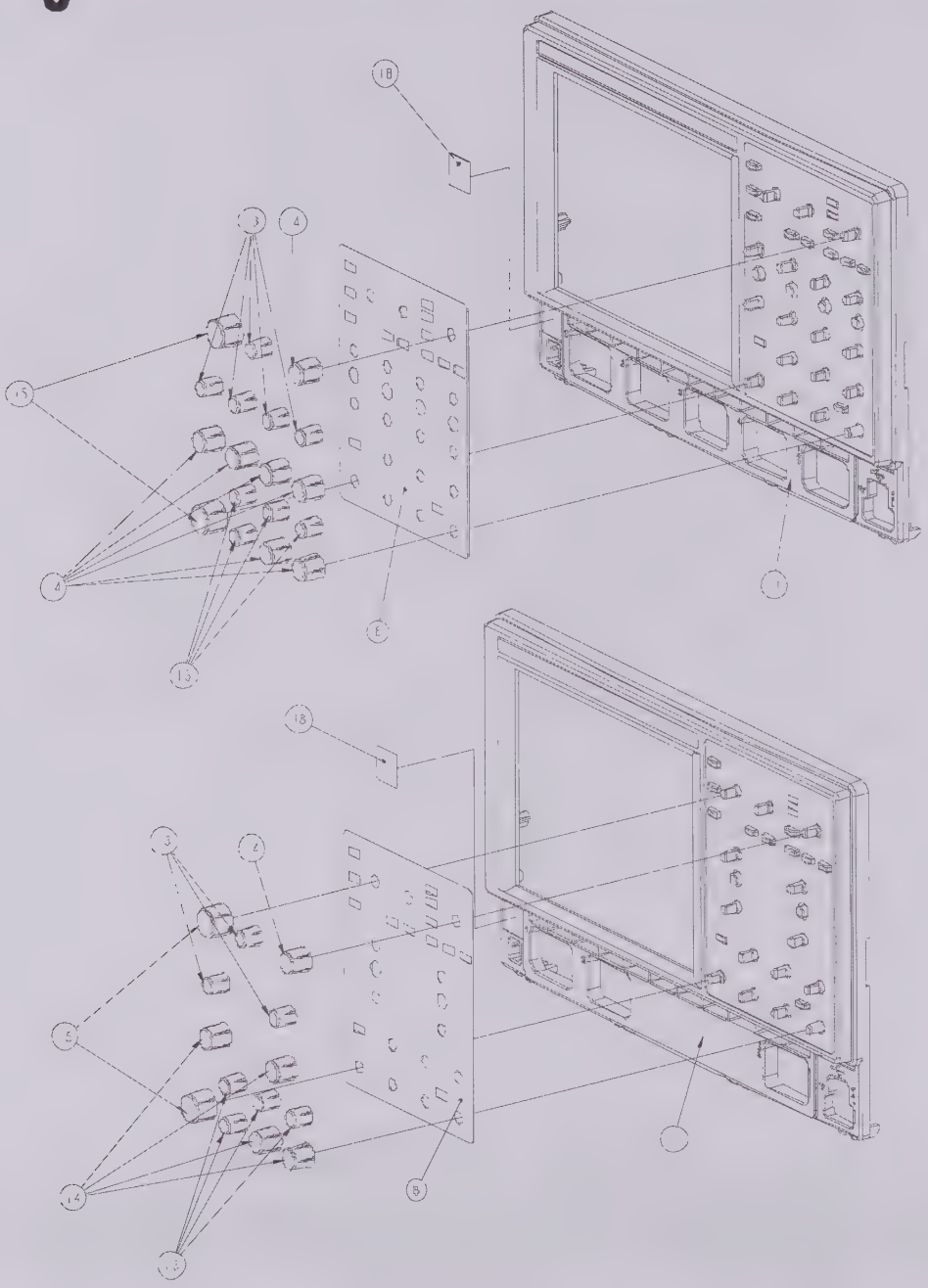

Figure 8-14 Two and Four Channel Front Panel Assembly

Item	LeCroy Part Number	Qty	Description
8	901489-00	1	WaveRunner 4 channel Front Panel Overlay
9	901756-00	1	WaveRunner 2 channel Bezel
10	901757-00	1	WaveRunner 2 channel Front Panel Overlay
11	901444-00	1	WaveRunner 4 channel Bezel
13	901582-00	7	Knob small
14	901583-00	5	Knob medium
15	901584-00	2	Knob large
18	901700-00	1	WaveRunner Input Overlay

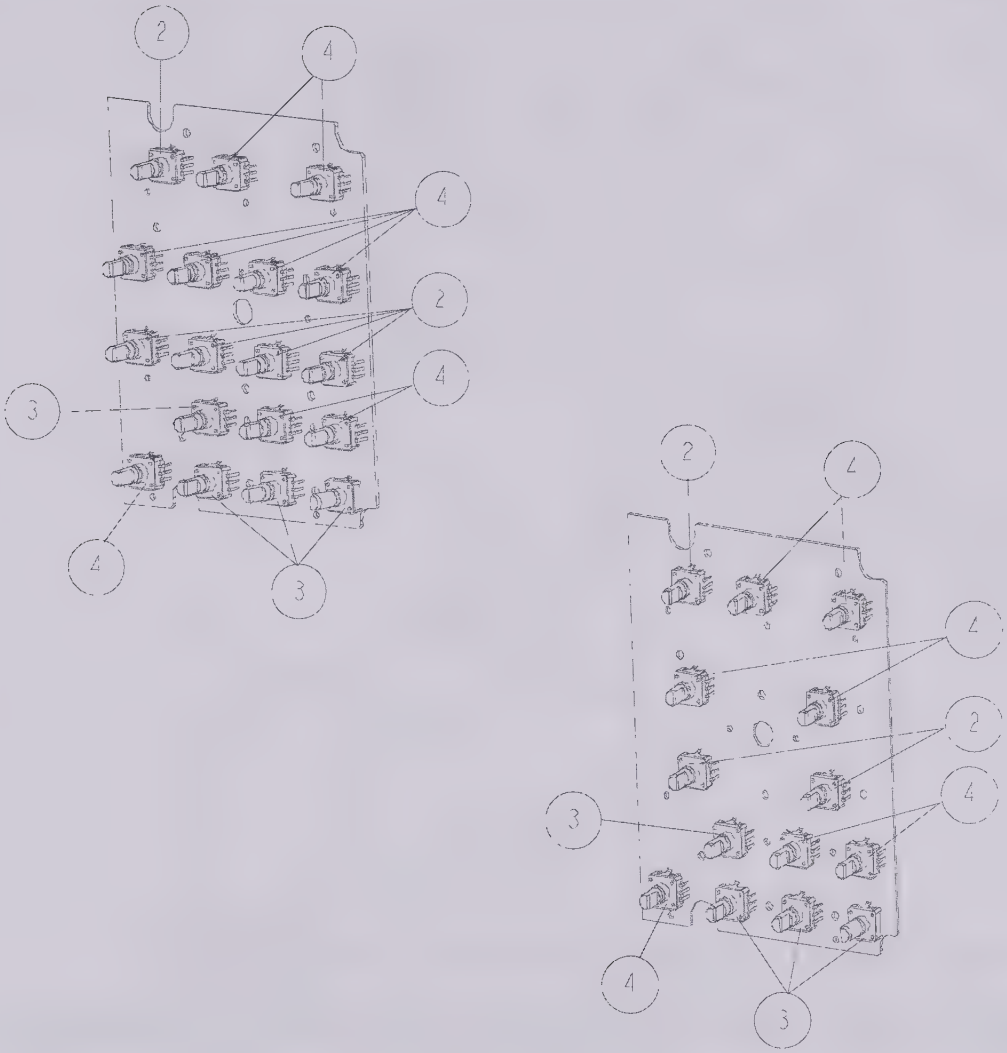

Figure 8-15 Two and Four Channel Front Panel Encoders

Item	LeCroy Part Number	Qty	Description
2	425100007	8	Encoder 20mm Detent
3	425100009	8	Encoder 20mm Detent Jog
4	425100010	16	Encoder 20mm Detent Jog Push Button

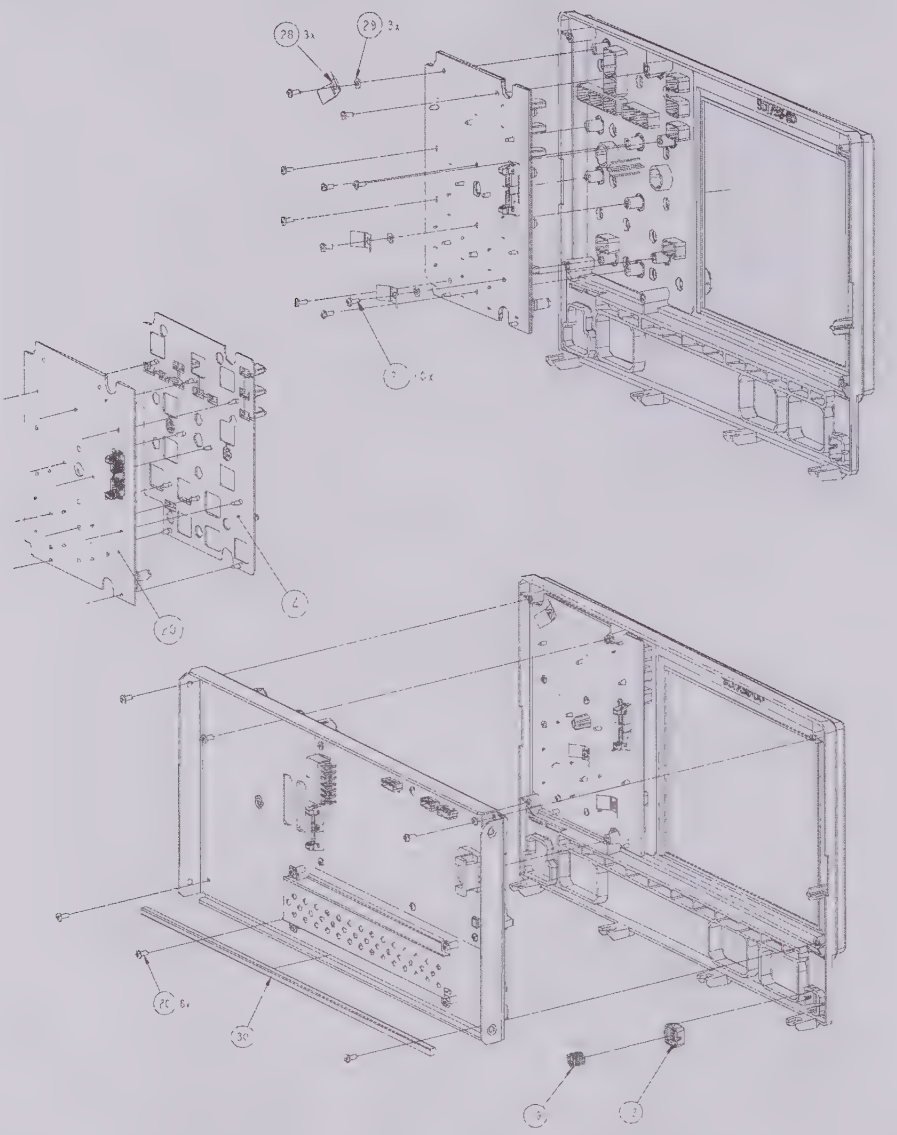

Figure 8-16 Two Channel Keypad Installation (Non "A") version

Item	LeCroy Part Number	Qty	Description
3	901740-00	1	Front Panel Assembly
4	See Figure 8-16	1	Front chassis panel assembly
5	901722-00	1	Elastomeric Keymat for 2 Channel Front Panel
11	901756-00	1	2 Channel Bezel
12	901445-00	1	Power button
19	544220007	1	Spring Compression 0.34L
20	561440404	8	Screw TX Pan #4-40 UNC 1/4 in
21	563425006	9	Screw TX Pan M2.5X0.4-6MM S1
28	530009005	3	Shield (RFI/EMI) Finger Stock
29	575100004	3	Washer Flat M2.5 6mmOD .5mmS
30	350187001	1	Gasket Ultra Soft Knit 13 in

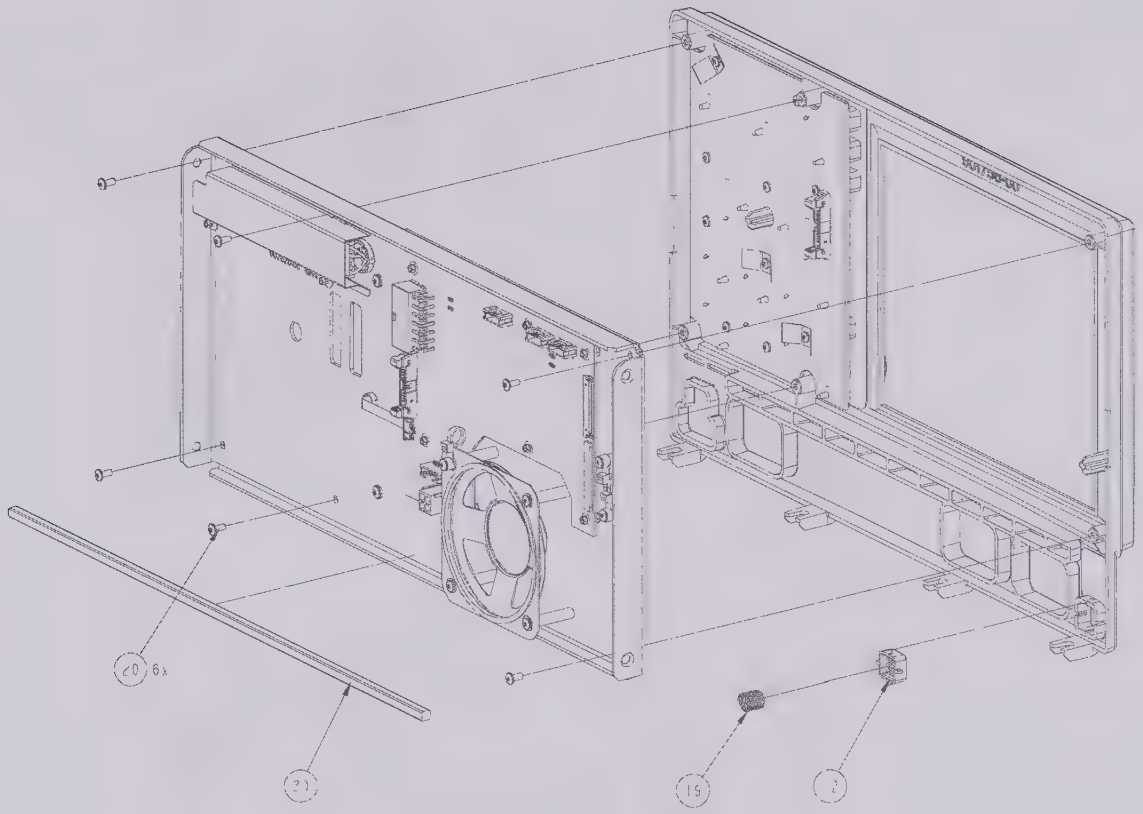

Figure 8-17 Two Channel Keypad Installation ("A") version

Item	LeCroy Part Number	Qty	Description
3	901740-00	1	Front Panel Assembly
4	See Figure 8-16	1	Front chassis panel assembly
5	901722-00	1	Elastomeric Keymat for 2 Channel Front Panel
11	901756-00	1	2 Channel Bezel
12	901445-00	1	Power button
19	544220007	1	Spring Compression 0.34L
20	561440404	8	Screw TX Pan #4-40 UNC 1/4 in
21	563425006	9	Screw TX Pan M2.5X0.4-6MM S1
28	530009005	3	Shield (RFI/EMI) Finger Stock
29	575100004	3	Washer Flat M2.5 6mmOD .5mmS
30	350187001	1	Gasket Ultra Soft Knit 13 in

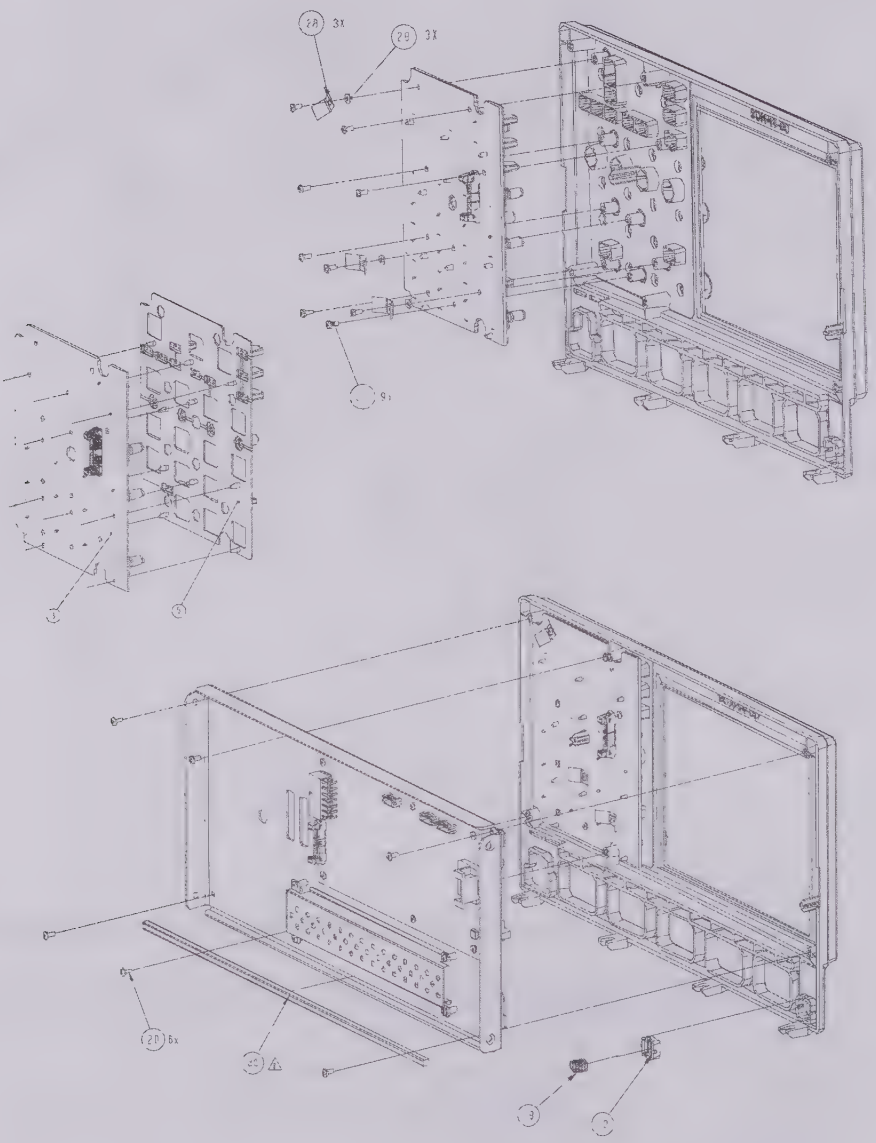

Figure 8-18 Four Channel Keypad Installation (Non "A" Version)

Item	LeCroy Part Number	Qty	Description
3	900896-00	1	Front Panel Assembly
4	See Figure 8-16	1	Front chassis panel assembly
5	901433-00	1	Elastomeric Keymat for Front Panel
11	901444-00	1	4 Channel Bezel
12	901445-00	1	Power button
19	544220007	1	Spring Compression 0.34L
20	561440404	8	Screw TX Pan #4-40 UNC 1/4 in
21	563425006	9	Screw TX Pan M2.5X0.4-6MM S1
28	530009005	3	Shield (RFI/EMI) Finger Stock
29	575100004	3	Washer Flat M2.5 6mmOD .5mmS
30	350187001	1	Gasket Ultra Soft Knit 13 in

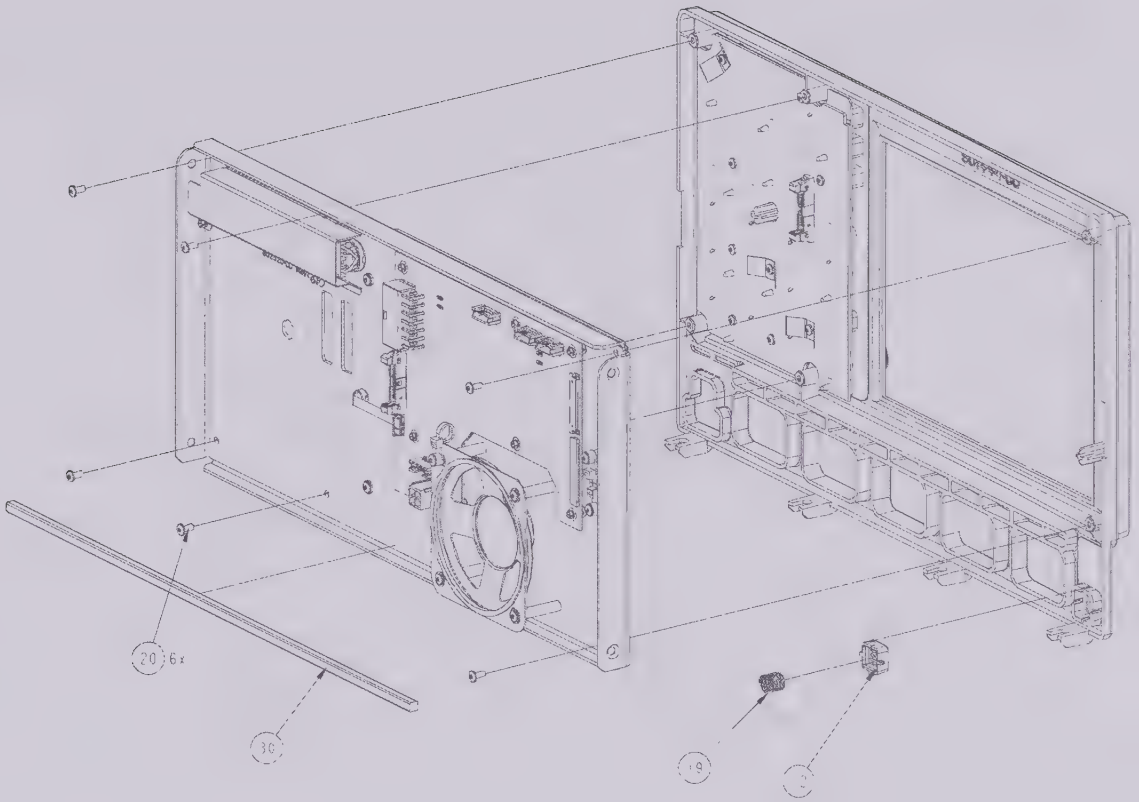

Figure 8-19 Four Channel Keypad Installation ("A" Version)

Item	LeCroy Part Number	Qty	Description
3	900896-00	1	Front Panel Assembly
4	See Figure 8-16	1	Front chassis panel assembly
5	901433-00	1	Elastomeric Keymat for Front Panel
11	901444-00	1	4 Channel Bezel
12	901445-00	1	Power button
19	544220007	1	Spring Compression 0.34L
20	561440404	8	Screw TX Pan #4-40 UNC 1/4 in
21	563425006	9	Screw TX Pan M2.5X0.4-6MM S1
28	530009005	3	Shield (RFI/EMI) Finger Stock
29	575100004	3	Washer Flat M2.5 6mmOD .5mmS
30	350187001	1	Gasket Ultra Soft Knit 13 in

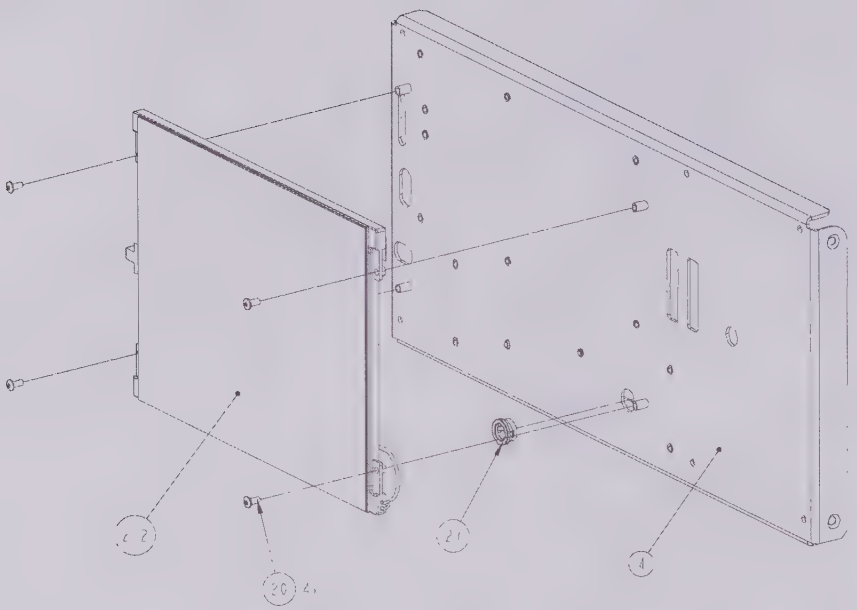

Figure 8-20 TFT Installation (Non "A" Version)

Item	LeCroy Part Number	Qty	Description
2	258000008	1	TFT & Touchscreen Assembly
4	901279-00	1	Front Chassis Panel Assembly
20	561440404	4	Screw TX PAN 4# -40UNF 1/4IN
27	519260001	1	Shorty Bushing ID .312 OD 7/16

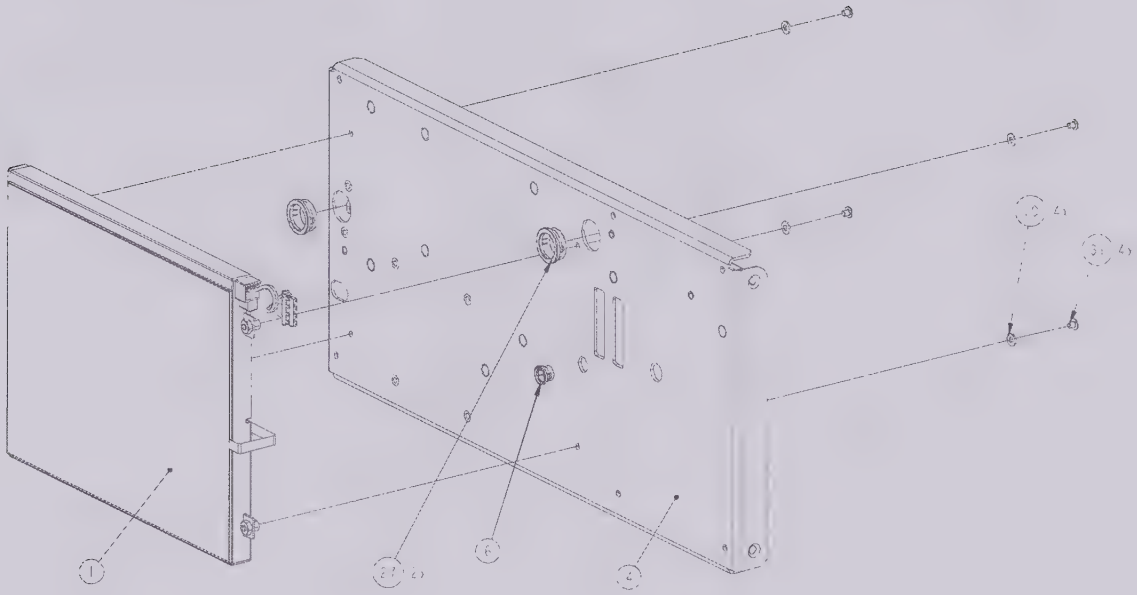

Figure 8-21 TFT Installation ("A" Version)

Item	LeCroy Part Number	Qty	Description
2	902448-00	1	TFT & Touchscreen Assembly ("A" Version)
4	902520-00	1	Front Chassis Panel Assembly
6	519260004	1	Shorty Bushing ID .250
20	561440404	4	Screw TX PAN 4# -40UNF 1/4IN
27	519260003	2	Shorty Bushing ID .500

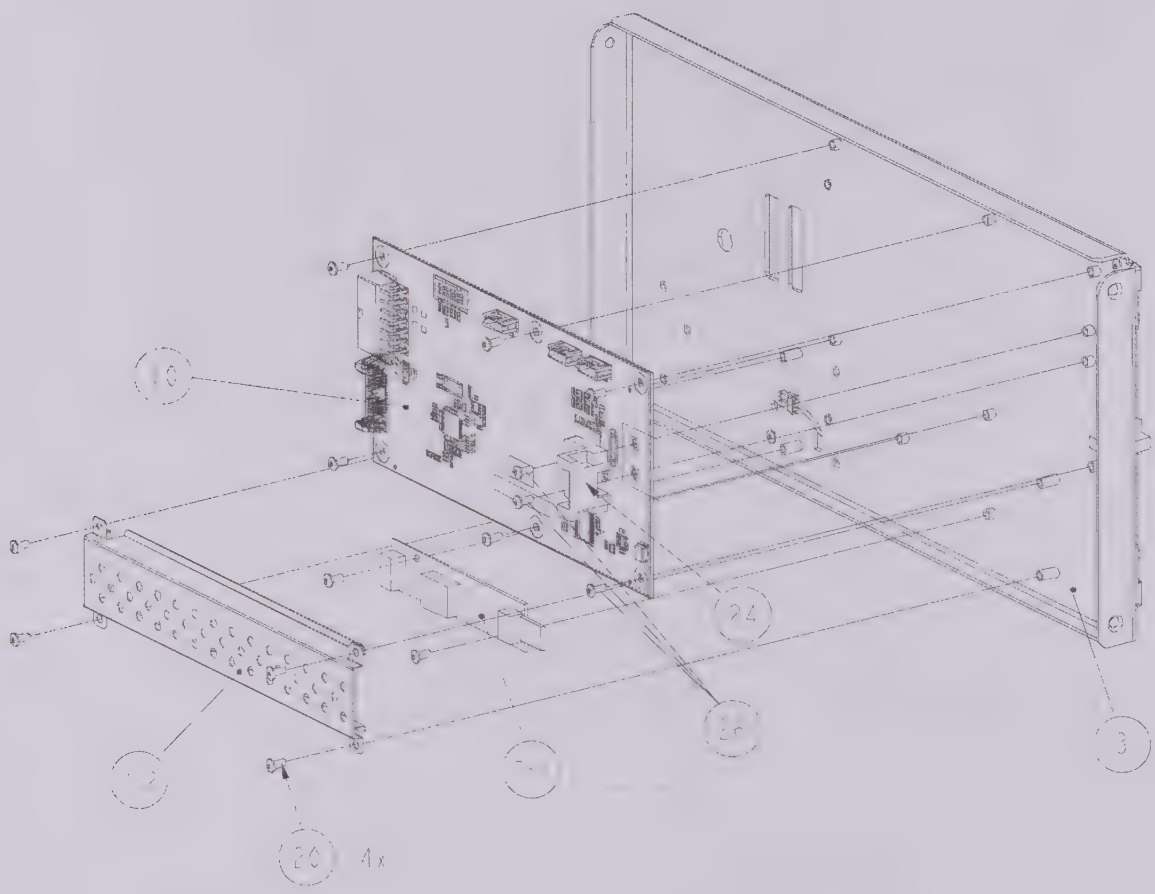

Figure 8-22 USB Hub and TFT Inverter Installation (Non "A" Version)

Item	LeCroy Part Number	Qty	Description
3	900896-00	1	Front Chassis Panel Assembly
7-1	258000007	1	Backlight Inverter
7-2	901459-00	1	Shield – Backlight Inverter
10	901851-00	1	USB Hub Board
16	901524-00	1	Cable Assy BL Power
17	901570-00	1	Cable Assy LCD Display
20	561440404	11	SCREW TX PAN 4# -40UNF 1/4IN
22	594120004	1	Cable Tie With Screw Base
24	594120010	1	Cable Tie R/A Mount 1/8" Dia
26	561440406	3	Screw TX Pan #4-40 UNF 3/8" S1

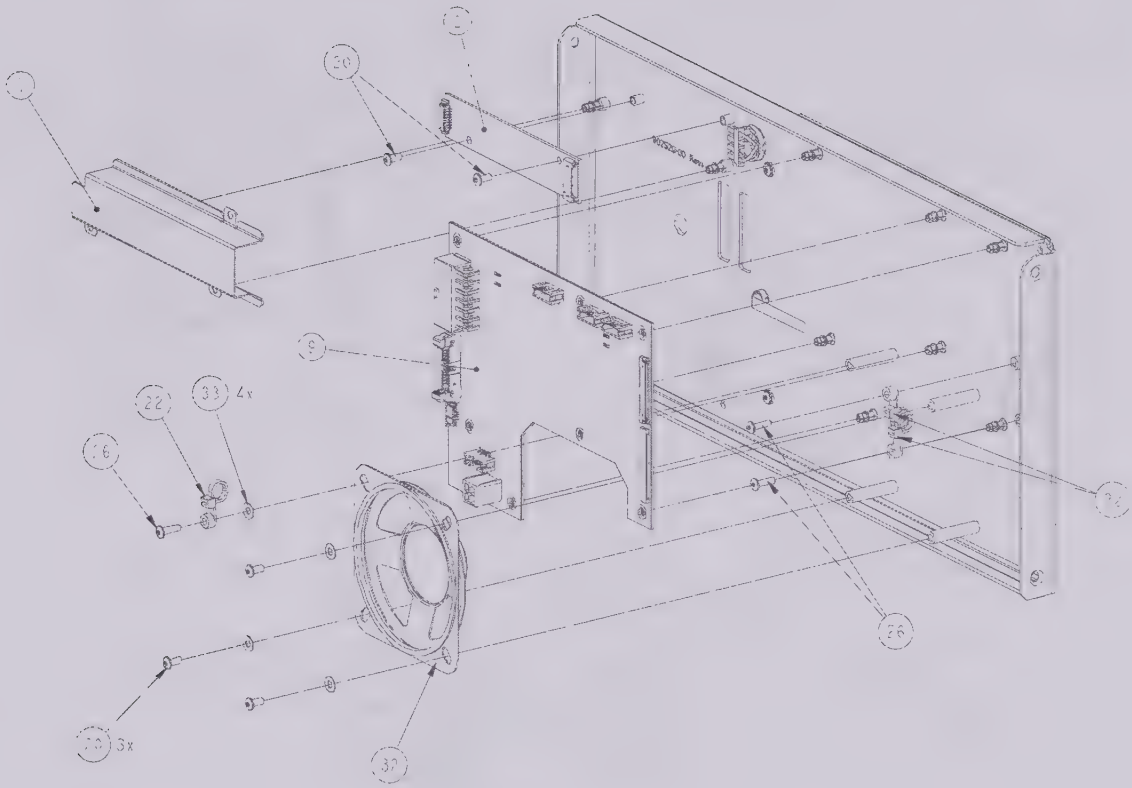

Figure 8-23 USB Hub and TFT Inverter Installation ("A" Version)

Item	LeCroy Part Number	Qty	Description
3	900896-00	1	Front Chassis Panel Assembly
7-1	258000007	1	Backlight Inverter
7-2	901459-00	1	Shield – Backlight Inverter
10	901851-00	1	USB Hub Board
16	901524-00	1	Cable Assy BL Power
17	901570-00	1	Cable Assy LCD Display
20	561440404	11	SCREW TX PAN 4# -40UNF 1/4IN
22	594120004	1	Cable Tie With Screw Base
24	594120010	1	Cable Tie R/A Mount 1/8" Dia
26	561440406	3	Screw TX Pan #4-40 UNF 3/8" S1

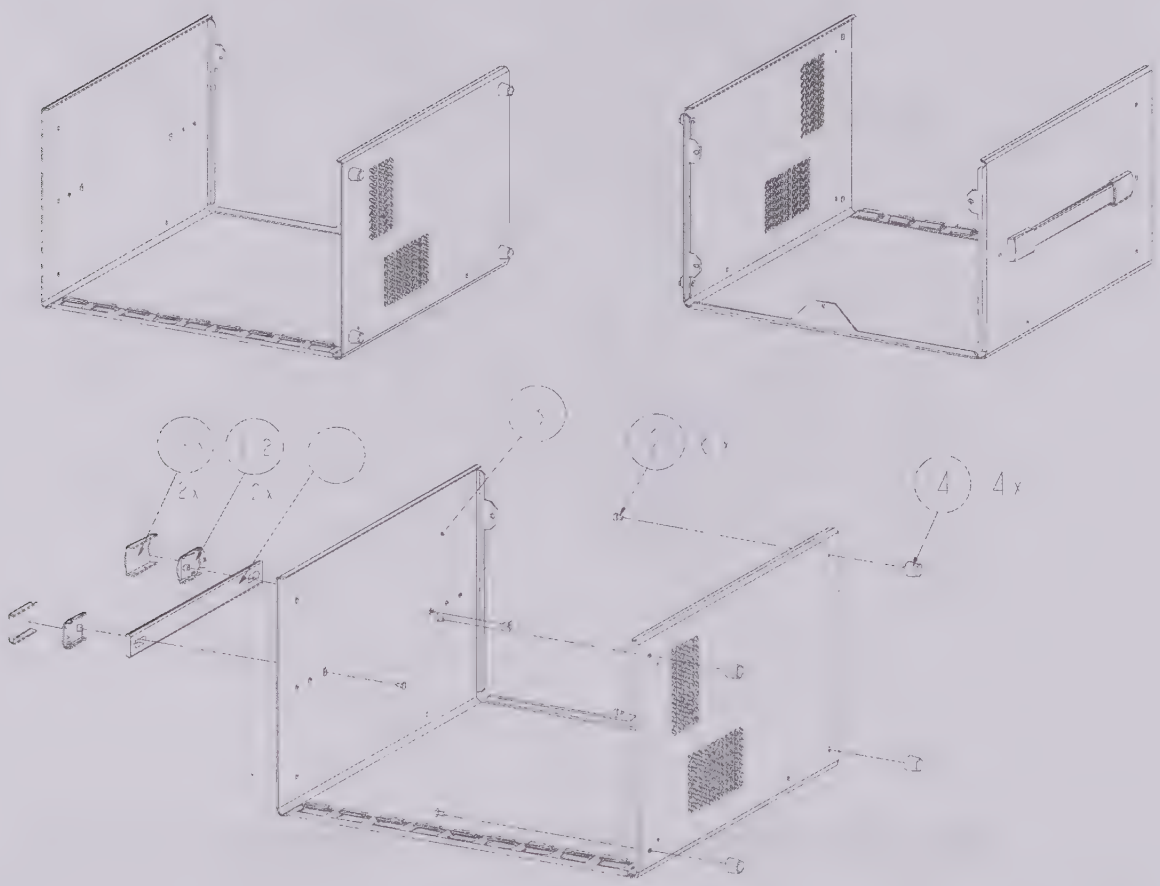

Figure 8-24 Top Cover Assembly

Item	LeCroy Part Number	Qty	Description
1	530301022	1	Handle Assembly 9" 184F
2	562632404	6	Screw TX Flat #6-32UNC 1/4" S1
3	901280-00	1	WaveRunner Chassis Top
4	901487-00	4	WaveRunner Side Foot

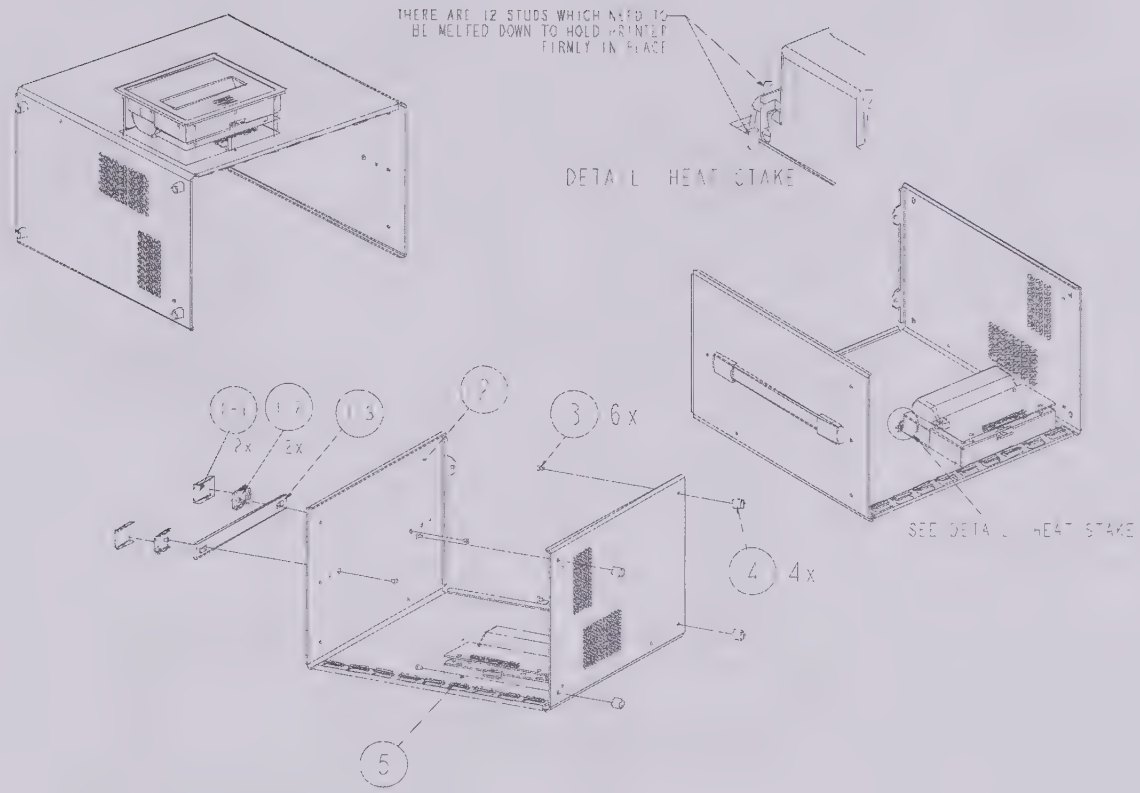

Figure 8-25 Graphics Printer Cover Assembly

Item	LeCroy Part Number	Qty	Description
1	530301022	1	Handle Assembly 9" 184F
2	901695-00	1	WaveRunner Top Cover for Printer
3	562632404	6	Screw TX Flat #6-32UNC 1/4" S1
4	901487-00	4	WaveRunner Side Foot
5	901642-00	1	WaveRunner Printer Assembly

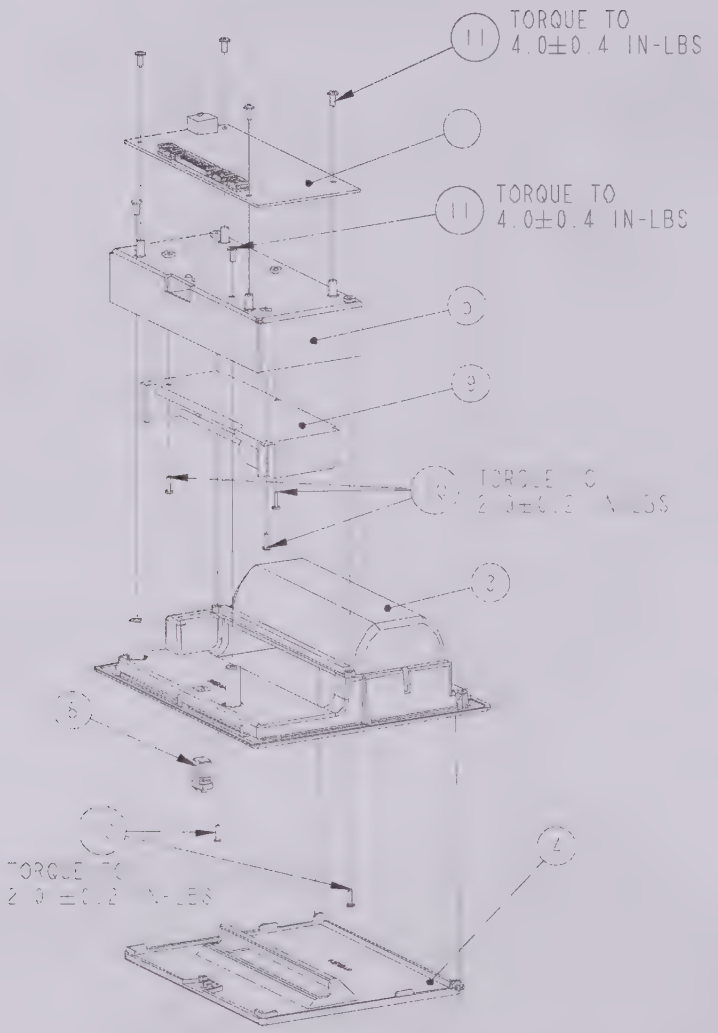

Figure 8-26 Graphics Printer Assembly

Item	LeCroy Part Number	Qty	Description
1	902259-00	1	WaveRunner6K Printer Controller PCA
2	901528-00	1	Cable Assy Printer
3	901702-00	1	WaveRunner6K PRINTER HOUSING
4	901703-00	1	WaveRunner6K PRINTER COVER
5	901704-00	1	WaveRunner6K PRINTER SUPPORT
6	350480006	1	Gasket, EMI Fab 4x4mmx5.12inch
7	350480005	8	Gasket, EMI Fab 1x3mmx2.36inch
8	530408001	1	Latch TL-304-1
9	325030001	1	Thermal Printer Mech 24V Drive
10	563620008	5	Screw TX Pan M2x0.4-8mm S3
11	561440404	6	Screw TX Pan #4-40 UNC 1/4 in
12	334000402	1	Thermal Paper For Seiko Printe
13	589200001	1	Thermal Head Cable, Printer
14	594120006	2	Tiewrap

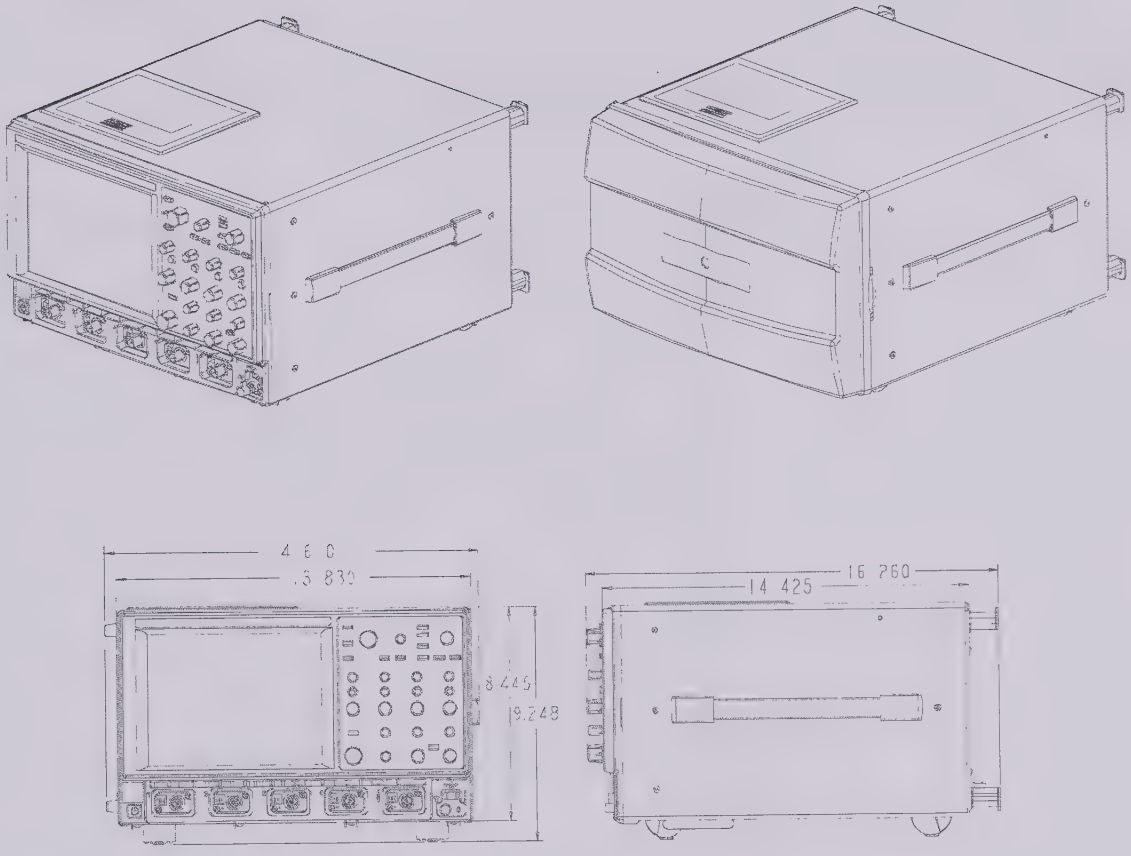

Figure 8-27 Dimensions

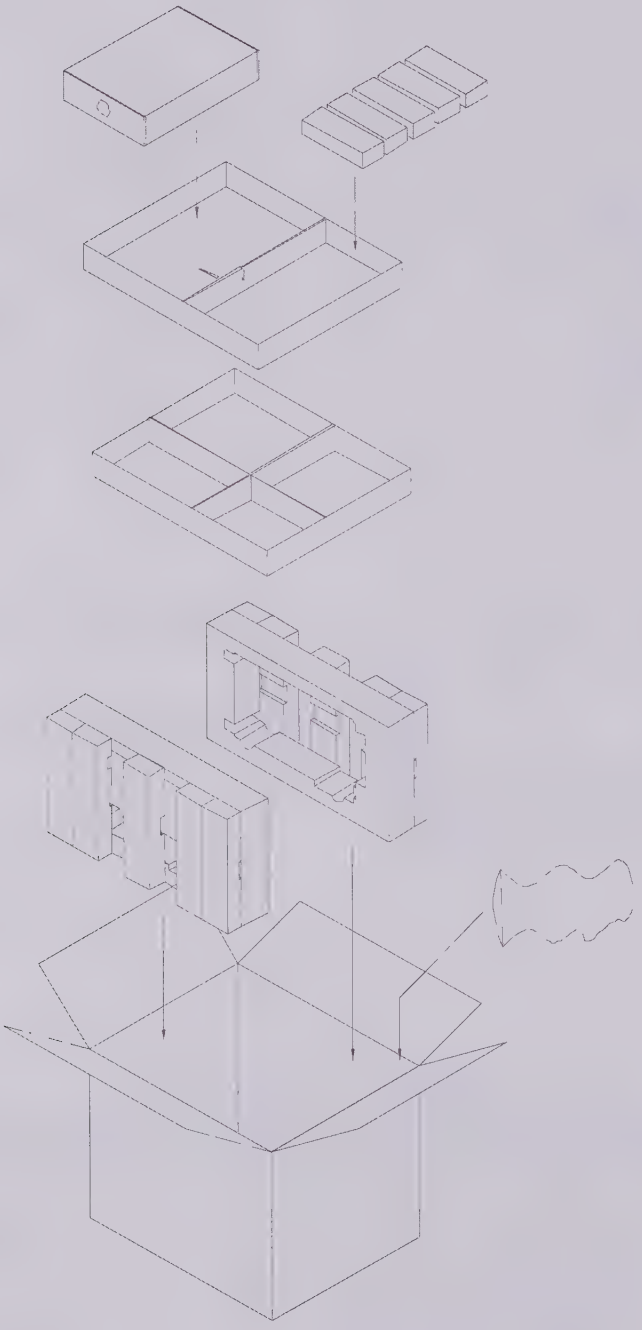

Figure 8-28 Packing

LeCroy Part Number	Description
901878-00	Shipping Package Assy

9. Schematics, Layouts & Parts List

This chapter contains the schematics, board layouts and parts list of the following subassemblies:

Description	Page
900890-00 PCI Schematic	9-2
900890-00 PCI Layout	9-3
900890-00 PCI Parts List	9-4
900896-00 4 channel front panel Schematic	9-8
900896-00 4 channel front panel Layout	9-9
900896-00 4 channel front panel Parts List	9-11
901504-00 CD ROM Adapter Schematic	9-14
901504-00 CD ROM Adapter Layout	9-15
901504-00 CD ROM Adapter Parts List	9-16
901558-00 Video Schematic	9-17
901558-00 Video Layout	9-19
901558-00 Video Parts List	9-20
901586-00 2 Ghz 4 channel Main Board Schematic	9-22
901586-00 2 Ghz 4 channel Main Board Layout	9-67
901586-00 2 Ghz 4 channel Main Board Parts List	9-89
901740-00 2 channel front panel Schematic	9-143
901740-00 2 channel front panel Layout	9-144
901740-00 2 channel front panel Parts List	9-145
901851-00 Hub Schematic	9-148
901851-00 Hub Layout	9-149
901851-00 Hub Parts List	9-150

This page intentionally left blank

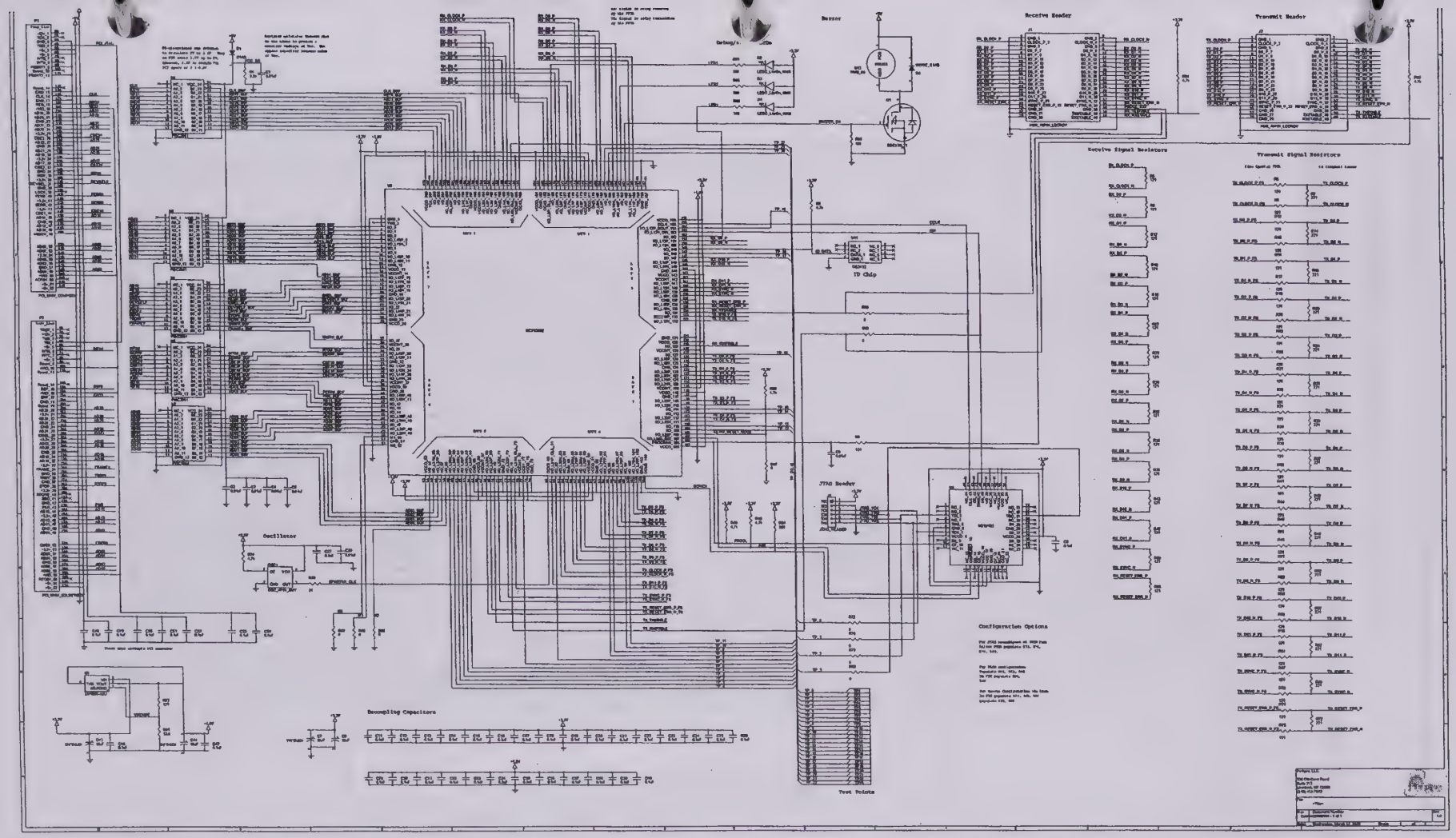
Buzzer
Receive Header
Transmit Header
Receive Signal Resistors
Transmit Signal Resistors
TD Chip
JTAG Header
Oscillator
Configuration Options
Decoupling Capacitors
Test Points

Part #: 900890-00 Description: PCI Interface

Location	Part Number	Description
C50	SM661068104	Cap Cera Chip 0.1uF 0603
C51	SM661068104	Cap Cera Chip 0.1uF 0603
C52	SM661068104	Cap Cera Chip 0.1uF 0603
C53	SM661068104	Cap Cera Chip 0.1uF 0603
C54	SM661068104	Cap Cera Chip 0.1uF 0603
D1	SM236020050	Diode Rectifier 50V 1A
D5	SM236020050	Diode Rectifier 50V 1A
J1	454040002	Conn Hdr 40-POS Male AMP Latch
J2	454040002	Conn Hdr 40-POS Male AMP Latch
OSC1	SM311200125	Gigabit Crystal Osc. 125Mhz
Q1	SM280120138	N Channel Pwr Mosfet BSS138LT
R1	SM652061000	Res Chip 0 Ohm Jumper
R2	SM652061472	Res Chip 1% 4.7K Ohm .063W
R4	SM652061332	Res Chip 1% 3.3K Ohm .063W
R5	SM655030037	Res Thk Film 1% 121 Ohm 1/16W
R6	SM655030037	Res Thk Film 1% 121 Ohm 1/16W
R7	SM652061221	Res Chip 1% 220 Ohm .063W
R8	SM655030037	Res Thk Film 1% 121 Ohm 1/16W
R9	SM655030037	Res Thk Film 1% 121 Ohm 1/16W
R10	SM655030037	Res Thk Film 1% 121 Ohm 1/16W
R11	SM652061221	Res Chip 1% 220 Ohm .063W
R12	SM655030037	Res Thk Film 1% 121 Ohm 1/16W
R13	SM655030037	Res Thk Film 1% 121 Ohm 1/16W
R14	SM655030037	Res Thk Film 1% 121 Ohm 1/16W
R15	SM655030037	Res Thk Film 1% 121 Ohm 1/16W
R16	SM652061221	Res Chip 1% 220 Ohm .063W
R17	SM655030037	Res Thk Film 1% 121 Ohm 1/16W
R18	SM655030037	Res Thk Film 1% 121 Ohm 1/16W
R19	SM655030037	Res Thk Film 1% 121 Ohm 1/16W
R20	SM652061221	Res Chip 1% 220 Ohm .063W
R21	SM655030037	Res Thk Film 1% 121 Ohm 1/16W
R22	SM655030037	Res Thk Film 1% 121 Ohm 1/16W
R23	SM655030037	Res Thk Film 1% 121 Ohm 1/16W
R24	SM652061221	Res Chip 1% 220 Ohm .063W
R25	SM655030037	Res Thk Film 1% 121 Ohm 1/16W
R26	SM655030037	Res Thk Film 1% 121 Ohm 1/16W
R27	SM655030037	Res Thk Film 1% 121 Ohm 1/16W
R28	SM652061221	Res Chip 1% 220 Ohm .063W
R29	SM655030037	Res Thk Film 1% 121 Ohm 1/16W
R30	SM655030037	Res Thk Film 1% 121 Ohm 1/16W
R31	SM655030037	Res Thk Film 1% 121 Ohm 1/16W
R32	SM655030037	Res Thk Film 1% 121 Ohm 1/16W
R33	SM652061221	Res Chip 1% 220 Ohm .063W
R34	SM655030037	Res Thk Film 1% 121 Ohm 1/16W

Part #: 900890-00 Description: PCI Interface

Location	Part Number	Description
R35	SM655030037	Res Thk Film 1% 121 Ohm 1/16W
R36	SM655030037	Res Thk Film 1% 121 Ohm 1/16W
R37	SM652061221	Res Chip 1% 220 Ohm .063W
R38	SM655030037	Res Thk Film 1% 121 Ohm 1/16W
R39	SM655030037	Res Thk Film 1% 121 Ohm 1/16W
R40	SM652061472	Res Chip 1% 4.7K Ohm .063W
R41	SM655030037	Res Thk Film 1% 121 Ohm 1/16W
R42	SM652061221	Res Chip 1% 220 Ohm .063W
R43	SM655030037	Res Thk Film 1% 121 Ohm 1/16W
R44	SM655030037	Res Thk Film 1% 121 Ohm 1/16W
R45	SM655030037	Res Thk Film 1% 121 Ohm 1/16W
R46	SM652061472	Res Chip 1% 4.7K Ohm .063W
R47	SM655030037	Res Thk Film 1% 121 Ohm 1/16W
R48	SM652061221	Res Chip 1% 220 Ohm .063W
R49	SM655030037	Res Thk Film 1% 121 Ohm 1/16W
R50	SM655030037	Res Thk Film 1% 121 Ohm 1/16W
R51	SM655030037	Res Thk Film 1% 121 Ohm 1/16W
R52	SM652061221	Res Chip 1% 220 Ohm .063W
R53	SM655030037	Res Thk Film 1% 121 Ohm 1/16W
R54	SM652061301	Res Chip 1% 300 Ohm .063W
R55	SM655030037	Res Thk Film 1% 121 Ohm 1/16W
R56	SM655030037	Res Thk Film 1% 121 Ohm 1/16W
R57	SM652061221	Res Chip 1% 220 Ohm .063W
R58	SM655030037	Res Thk Film 1% 121 Ohm 1/16W
R59	SM655030037	Res Thk Film 1% 121 Ohm 1/16W
R62	SM652061221	Res Chip 1% 220 Ohm .063W
R64	SM655030037	Res Thk Film 1% 121 Ohm 1/16W
R67	SM655030037	Res Thk Film 1% 121 Ohm 1/16W
R68	SM652061221	Res Chip 1% 220 Ohm .063W
R70	SM655030037	Res Thk Film 1% 121 Ohm 1/16W
R71	SM655030037	Res Thk Film 1% 121 Ohm 1/16W
R72	SM652061221	Res Chip 1% 220 Ohm .063W
R74	SM652061472	Res Chip 1% 4.7K Ohm .063W
R75	SM655030037	Res Thk Film 1% 121 Ohm 1/16W
R77	SM655030037	Res Thk Film 1% 121 Ohm 1/16W
R79	SM652061240	Res Chip 1% 24.0 Ohm .063W
R81	SM655030041	Res Thk Film 1% 53.6 Ohm 1/16W
R83	SM652061103	Res Chip 1% 10K Ohm .063W
R84	SM652061472	Res Chip 1% 4.7K Ohm .063W
R85	SM652061472	Res Chip 1% 4.7K Ohm .063W
R86	SM652061472	Res Chip 1% 4.7K Ohm .063W
R88	SM652061000	Res Chip 0 Ohm Jumper
R89	SM652061000	Res Chip 0 Ohm Jumper
U1	SM207010016	IC CMOS 10 Bit 2 Port Bus Swit

Part #: 900890-00 Description: PCI Interface

Location	Part Number	Description
U2	SM207010016	IC CMOS 10 Bit 2 Port Bus Swit
U3	SM205717001	IC PAL PQ208 Plastic QFP
U4	SM207010016	IC CMOS 10 Bit 2 Port Bus Swit
U5	SM207010016	IC CMOS 10 Bit 2 Port Bus Swit
U7	SM207010016	IC CMOS 10 Bit 2 Port Bus Swit
U9	SM208540002	IC Adj Pos Volt Reg 3A LDO
U11	SM205108433	IC Eeprom 4K Bit W/ Serial Num
U12	530040006	Buzzer 85DB 4 TO 7V

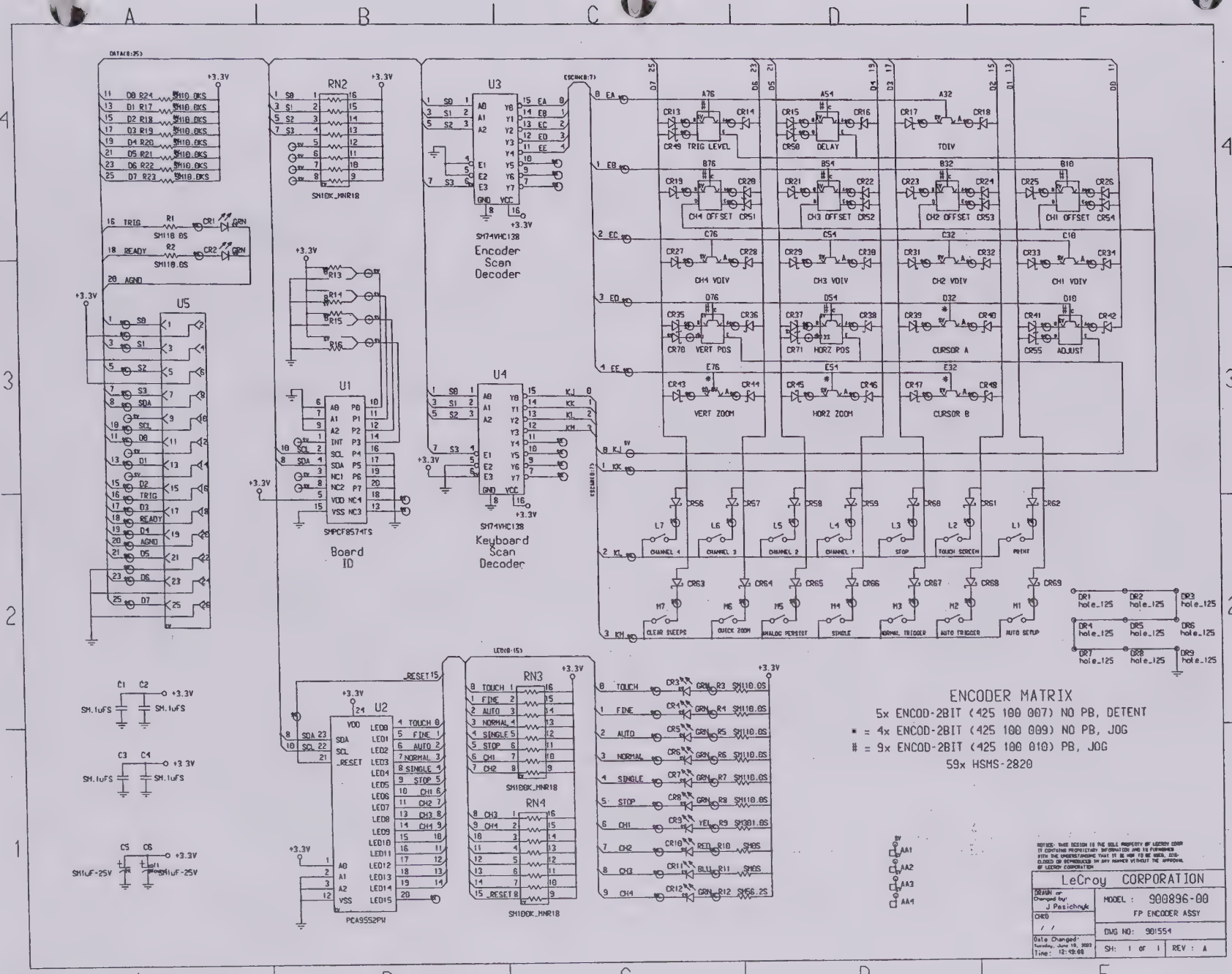
ENCODER MATRIX
5x ENCOD-2BIT (425 100 007) NO PB, DETENT
* = 4x ENCOD-2BIT (425 100 009) NO PB, JOG
# = 9x ENCOD-2BIT (425 100 010) PB, JOG
59x HSMS-2820
Encoder Scan Decoder
Keyboard Scan Decoder
Board ID
LeCroy CORPORATION
MODEL : 900896-00
FP ENCODER ASSY
DWG NO: 901554
SH: 1 OF 1
REV : A

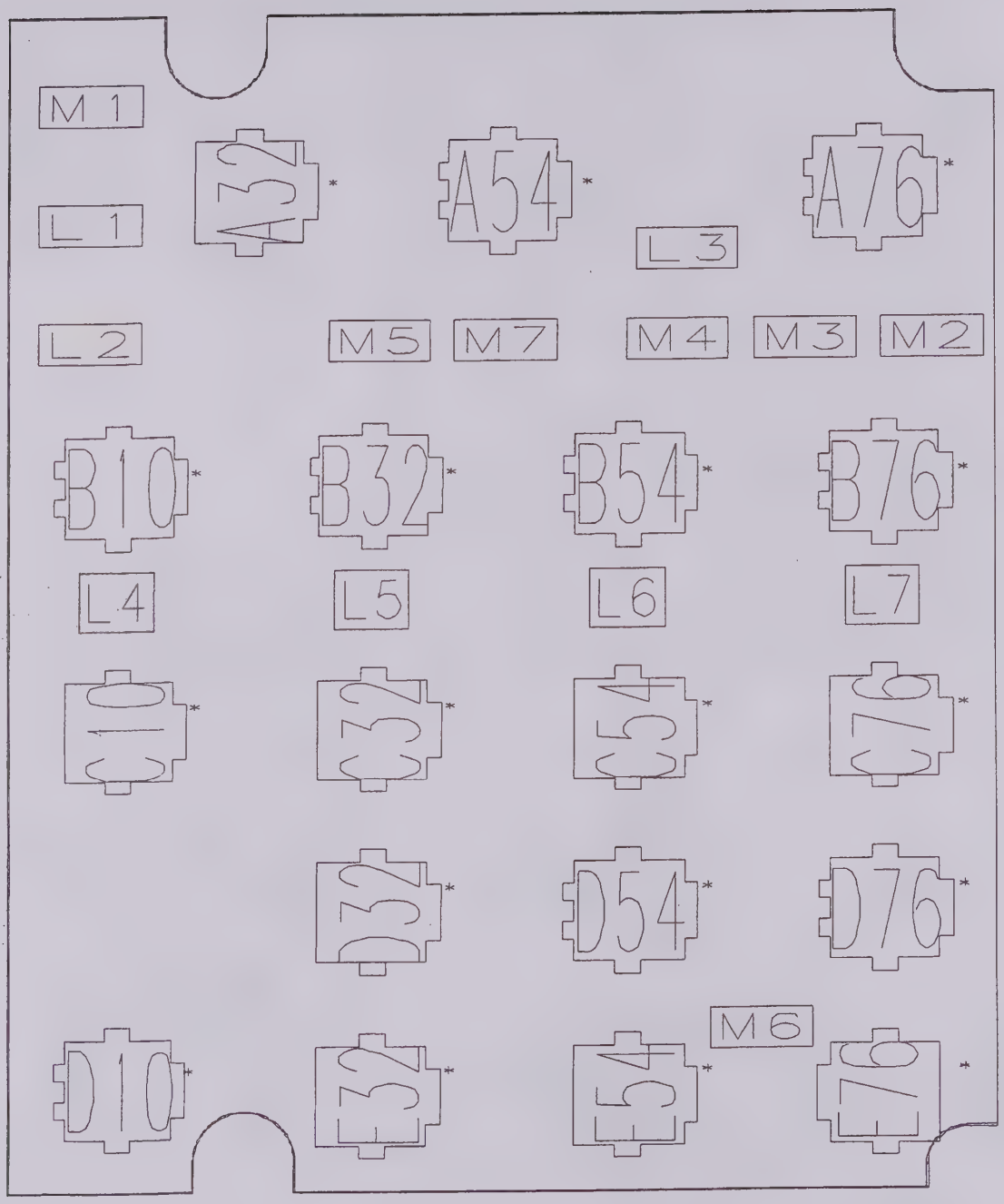

4 channel Encoder Board – Top Side

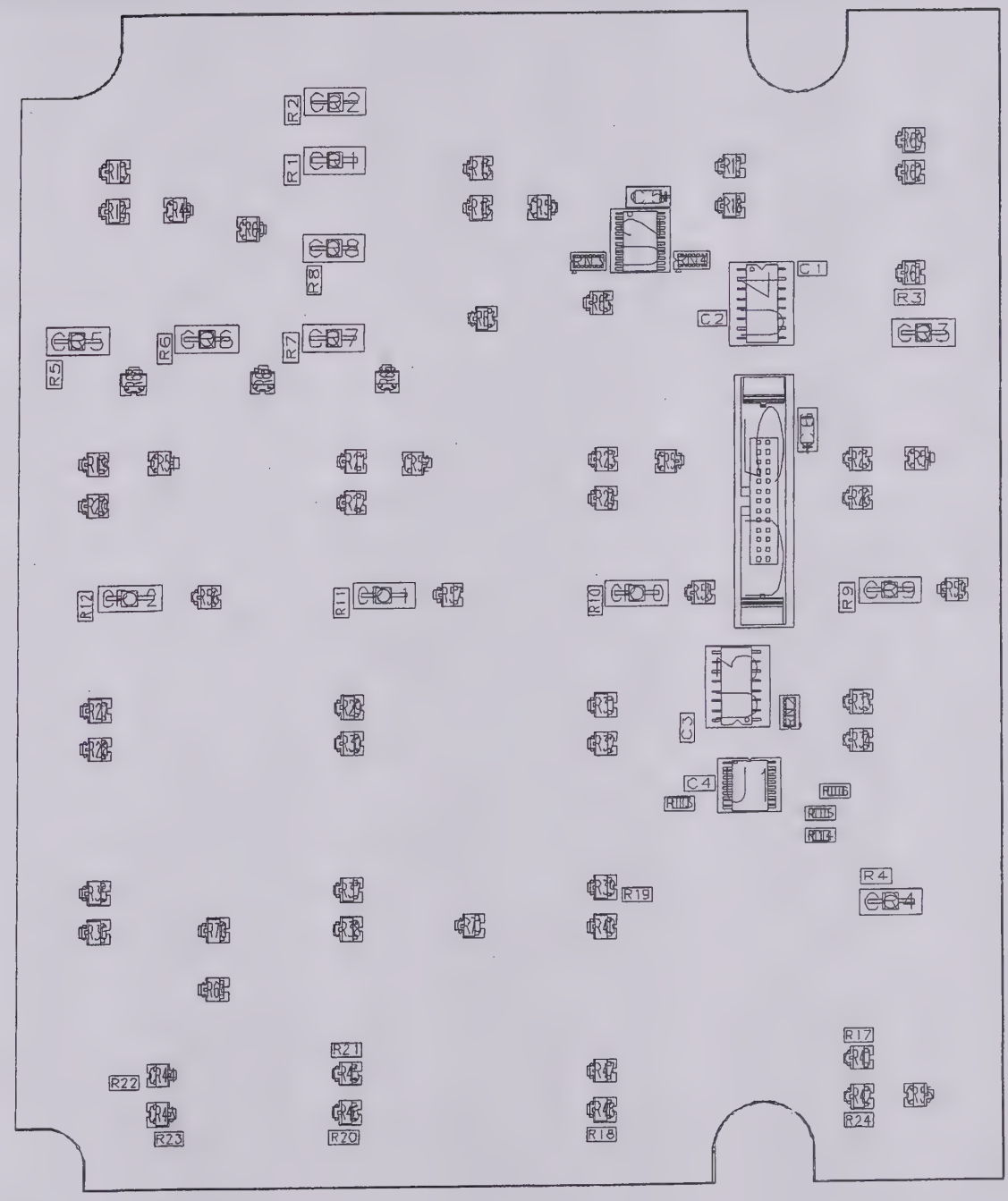

4 channel Encoder Board – Bottom Side

Part #: 900896-00 Description: 4 Channel Encoder Board

Ref	Component	Descr
A32	425100007	Encoder 20mm Detent
A54	425100010	Encoder 20mm Detent JOG PB
A76	425100010	Encoder 20mm Detent JOG PB
B10	425100010	Encoder 20mm Detent JOG PB
B32	425100010	Encoder 20mm Detent JOG PB
B54	425100010	Encoder 20mm Detent JOG PB
B76	425100010	Encoder 20mm Detent JOG PB
C1	SM661207104	Cap Cera Chip 20 % .1 UF
C2	SM661207104	Cap Cera Chip 20 % .1 UF
C3	SM661207104	Cap Cera Chip 20 % .1 UF
C4	SM661207104	Cap Cera Chip 20 % .1 UF
C5	SM666487105	Cap Mold EIA Chip 1uF 10%
C6	SM666487105	Cap Mold EIA Chip 1uF 10%
C10	425100007	Encoder 20mm Detent
C32	425100007	Encoder 20mm Detent
C54	425100007	Encoder 20mm Detent
C76	425100007	Encoder 20mm Detent
CR1	SM256000005	DIODE LED AQUA GREEN 2MM
CR2	SM256000005	DIODE LED AQUA GREEN 2MM
CR3	SM256000005	DIODE LED AQUA GREEN 2MM
CR4	SM256000005	DIODE LED AQUA GREEN 2MM
CR5	SM256000005	DIODE LED AQUA GREEN 2MM
CR6	SM256000005	DIODE LED AQUA GREEN 2MM
CR7	SM256000005	DIODE LED AQUA GREEN 2MM
CR8	SM256000005	DIODE LED AQUA GREEN 2MM
CR9	SM256000006	DIODE LED SP YELLOW 2MM
CR10	SM256000001	DIODE LED RED 2MM
CR11	SM256000004	DIODE LED BLUE 2MM
CR12	SM256000005	DIODE LED AQUA GREEN 2MM
CR13	SM253032820	Diode Schottky 2820
CR14	SM253032820	Diode Schottky 2820
CR15	SM253032820	Diode Schottky 2820
CR16	SM253032820	Diode Schottky 2820
CR17	SM253032820	Diode Schottky 2820
CR18	SM253032820	Diode Schottky 2820
CR19	SM253032820	Diode Schottky 2820
CR20	SM253032820	Diode Schottky 2820
CR21	SM253032820	Diode Schottky 2820
CR22	SM253032820	Diode Schottky 2820
CR23	SM253032820	Diode Schottky 2820
CR24	SM253032820	Diode Schottky 2820
CR25	SM253032820	Diode Schottky 2820
CR26	SM253032820	Diode Schottky 2820

Part #: 900896-00 Description: 4 Channel Encoder Board

Ref	Component	Descr
CR27	SM253032820	Diode Schottky 2820
CR28	SM253032820	Diode Schottky 2820
CR29	SM253032820	Diode Schottky 2820
CR30	SM253032820	Diode Schottky 2820
CR31	SM253032820	Diode Schottky 2820
CR32	SM253032820	Diode Schottky 2820
CR33	SM253032820	Diode Schottky 2820
CR34	SM253032820	Diode Schottky 2820
CR35	SM253032820	Diode Schottky 2820
CR36	SM253032820	Diode Schottky 2820
CR37	SM253032820	Diode Schottky 2820
CR38	SM253032820	Diode Schottky 2820
CR39	SM253032820	Diode Schottky 2820
CR40	SM253032820	Diode Schottky 2820
CR41	SM253032820	Diode Schottky 2820
CR42	SM253032820	Diode Schottky 2820
CR43	SM253032820	Diode Schottky 2820
CR44	SM253032820	Diode Schottky 2820
CR45	SM253032820	Diode Schottky 2820
CR46	SM253032820	Diode Schottky 2820
CR47	SM253032820	Diode Schottky 2820
CR48	SM253032820	Diode Schottky 2820
CR49	SM253032820	Diode Schottky 2820
CR50	SM253032820	Diode Schottky 2820
CR51	SM253032820	Diode Schottky 2820
CR52	SM253032820	Diode Schottky 2820
CR53	SM253032820	Diode Schottky 2820
CR54	SM253032820	Diode Schottky 2820
CR55	SM253032820	Diode Schottky 2820
CR56	SM253032820	Diode Schottky 2820
CR57	SM253032820	Diode Schottky 2820
CR58	SM253032820	Diode Schottky 2820
CR59	SM253032820	Diode Schottky 2820
CR60	SM253032820	Diode Schottky 2820
CR61	SM253032820	Diode Schottky 2820
CR62	SM253032820	Diode Schottky 2820
CR63	SM253032820	Diode Schottky 2820
CR64	SM253032820	Diode Schottky 2820
CR65	SM253032820	Diode Schottky 2820
CR66	SM253032820	Diode Schottky 2820
CR67	SM253032820	Diode Schottky 2820
CR68	SM253032820	Diode Schottky 2820
CR69	SM253032820	Diode Schottky 2820
CR70	SM253032820	Diode Schottky 2820

Part #: 900896-00 Description: 4 Channel Encoder Board

Ref	Component	Descr
CR71	SM253032820	Diode Schottky 2820
D10	425100010	Encoder 20mm Detent JOG PB
D32	425100009	Encoder 20mm Detent JOG
D54	425100010	Encoder 20mm Detent JOG PB
D76	425100010	Encoder 20mm Detent JOG PB
E32	425100009	Encoder 20mm Detent JOG
E54	425100009	Encoder 20mm Detent JOG
E76	425100009	Encoder 20mm Detent JOG
R1	SM653101301	Res Chip 1% 110 Ohms
R2	SM653101301	Res Chip 1% 110 Ohms
R3	SM653101301	Res Chip 1% 110 Ohms
R4	SM653101301	Res Chip 1% 110 Ohms
R5	SM653101301	Res Chip 1% 110 Ohms
R6	SM653101301	Res Chip 1% 110 Ohms
R7	SM653101301	Res Chip 1% 110 Ohms
R8	SM653101301	Res Chip 1% 110 Ohms
R9	SM653101343	Res Chip 1% 301 Ohms
R10	SM654101000	Chip Jumper Zero Ohms
R11	SM654101000	Chip Jumper Zero Ohms
R12	SM653101273	Res Chip 1% 56.2 Ohms
R13	SM654101000	Chip Jumper Zero Ohms
R14	SM654101000	Chip Jumper Zero Ohms
R15	SM654101000	Chip Jumper Zero Ohms
R16	SM654101000	Chip Jumper Zero Ohms
R17	SM653101489	Res Chip 1 % 10.0 K
R18	SM653101489	Res Chip 1 % 10.0 K
R19	SM653101489	Res Chip 1 % 10.0 K
R20	SM653101489	Res Chip 1 % 10.0 K
R21	SM653101489	Res Chip 1 % 10.0 K
R22	SM653101489	Res Chip 1 % 10.0 K
R23	SM653101489	Res Chip 1 % 10.0 K
R24	SM653101489	Res Chip 1 % 10.0 K
RN2	SM190105001	Resistor Network 10K Ohm 5%
RN3	SM190105003	Resistor Network 100K Ohm 5%
RN4	SM190105003	Resistor Network 100K Ohm 5%
U1	SM207630574	IC 8-Bit I/O Expander I2C Bus
U2	SM202109001	IC 16-Bit IIC LED Driver PCA95
U3	SM202051011	IC 3-to-8 Line Decoder VHC138
U4	SM202051011	IC 3-to-8 Line Decoder VHC138
U5	SM453026002	Conn .050" Hdr 26-Pos Male

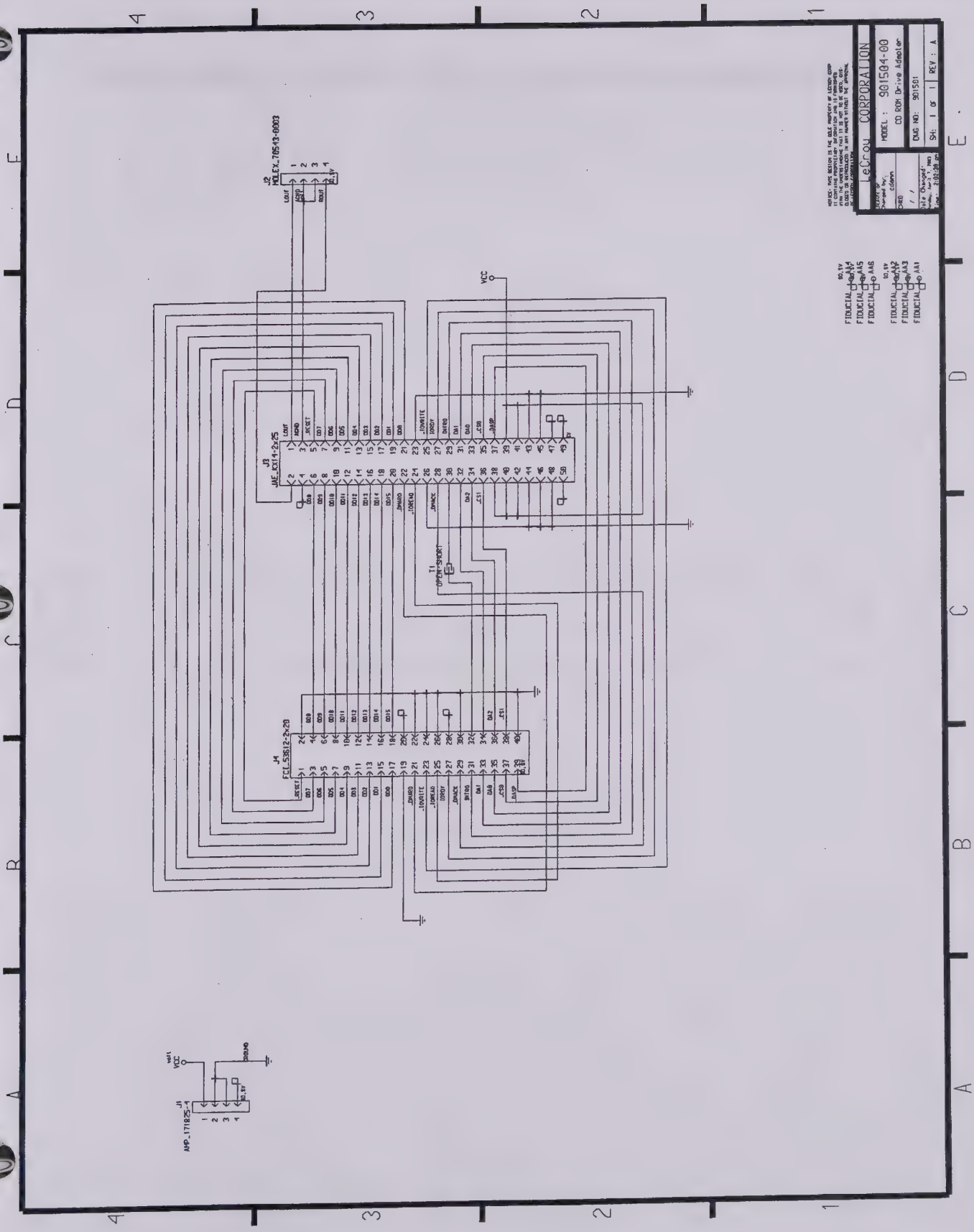
LeCroy CORPORATION
MODEL : 901504-00
CD ROM Drive Adapter
DWG NO: 901501
SH: 1 OF 1
REV : A
J2
MOLEX_70543-0003
J3
JAE_KX14-2x25
J4
FCI_53612-2x20
T1
OPEN-SHORT
J1
AMP_171825-4
VCC
FIDUCIAL
FIDUCIAL
FIDUCIAL
FIDUCIAL
FIDUCIAL
FIDUCIAL
FIDUCIAL

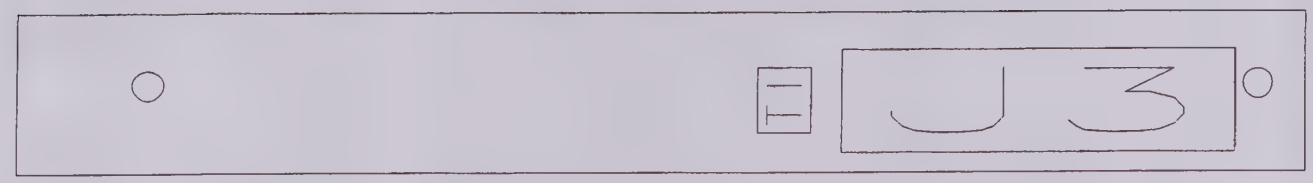

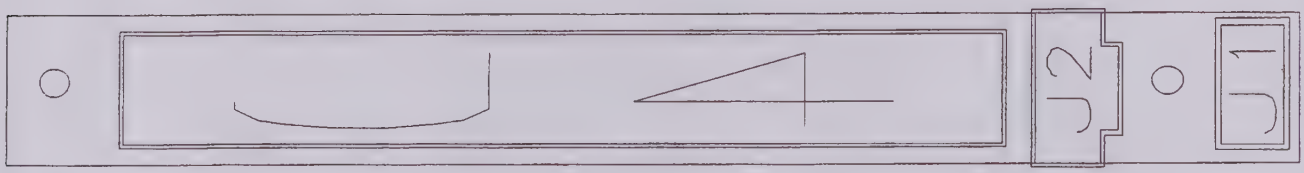

CD ROM Drive Adapter

Part #: 900420-00 Description: CD ROM Adapter Board

Location	Part Number	Description
J1	454315004	Hdr Sold Tail/Male 4
J2	454510104	Hdr Vert Male Shrouded 4 Pos
J3	SM454520050	Conn Header 50 PIN Smt
J4	SM454204040	Hdr Male 40 Pos Idc

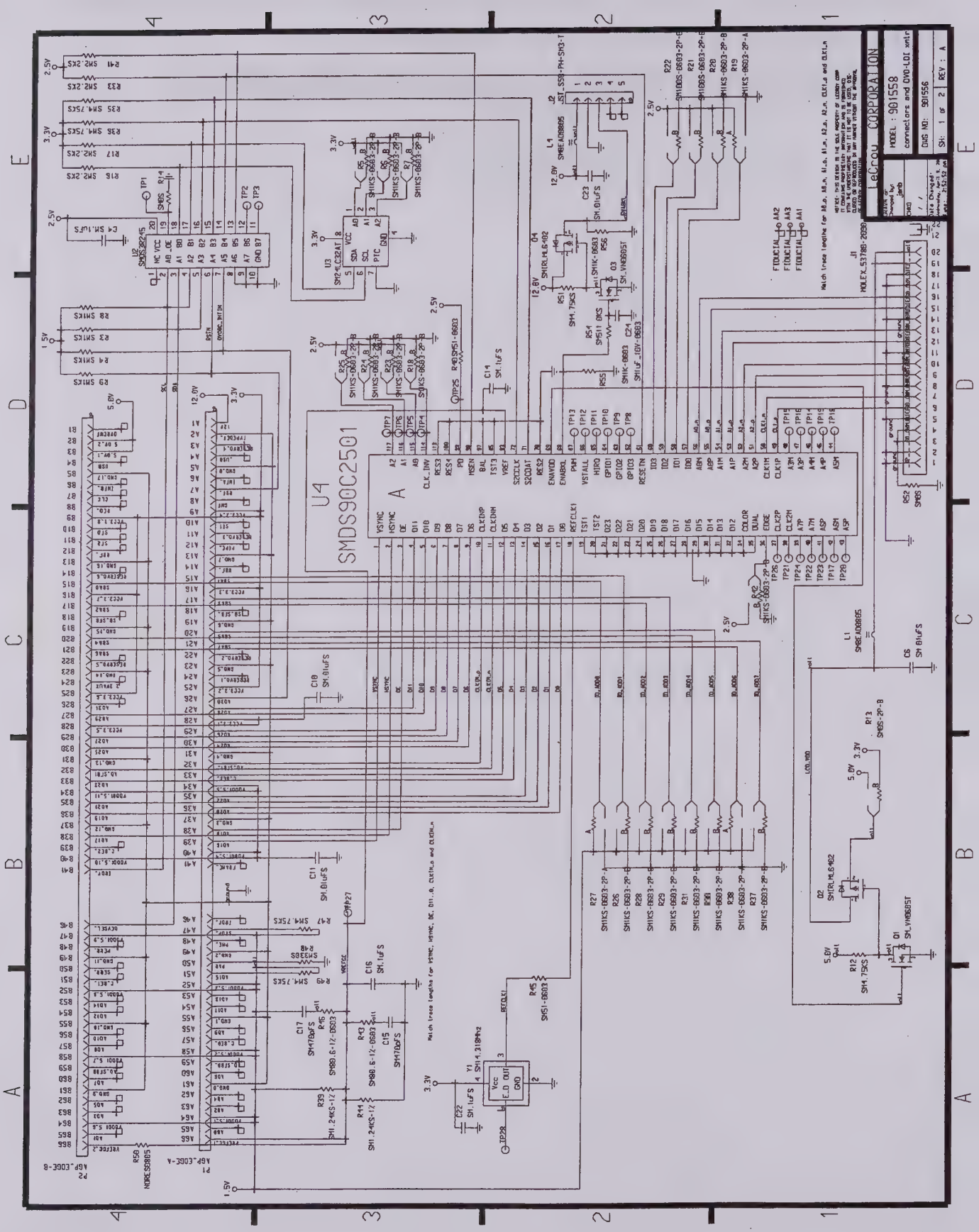
LeCroy CORPORATION
MODEL : 901558
connectors and DVD-LDI xntr
DWG NO: 901556
SH: 1 of 2
REV : A
U4
SMDS90C2501
A
Match trace lengths for VSYNC, HSYNC, DE, D11..0, CLK1M..0 and CLK1M..n
Match trace lengths for A0..0, A0..n, A1..0, A1..n, A2..0, A2..n, CLK1..0 and CLK1..n

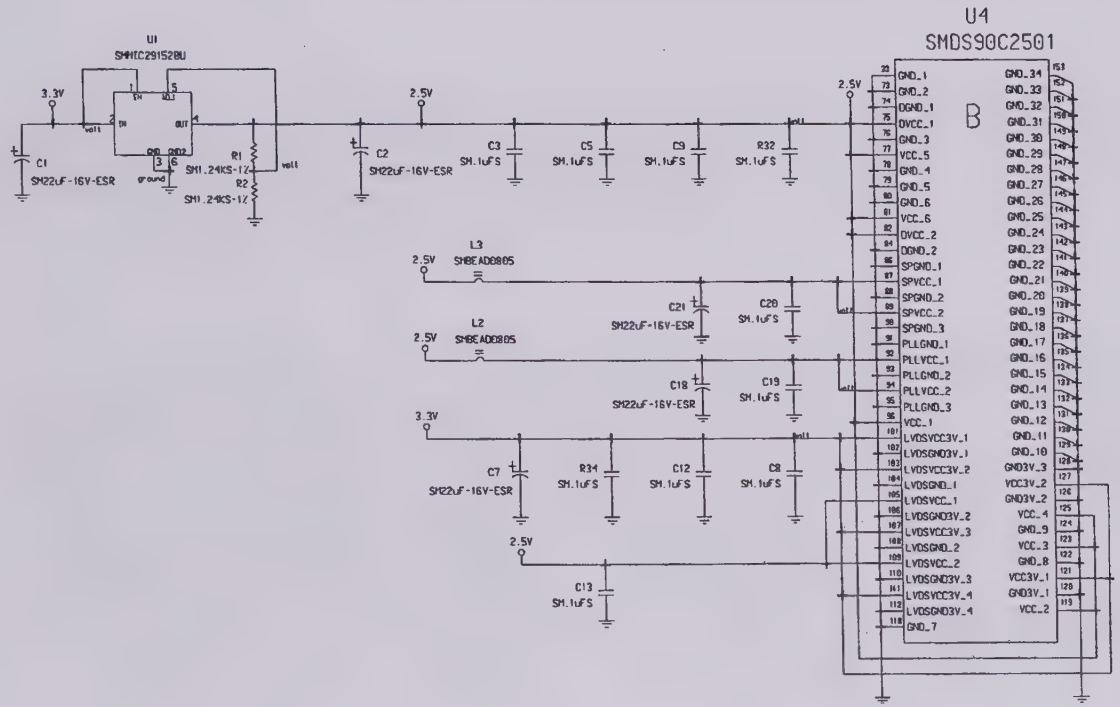

Place all capacitors, resistors and inductors very close to the pins.

Place capacitors across pins 87, 89 and 86, 88, 90 with the Ferrite Bead close to them.

Place capacitors across pins 92, 94 and 91, 93, 95 with the Ferrite Bead close to them.

NOTICE: THIS DESIGN IS THE SOLE PROPERTY OF LECROY CORP
IT CONTAINS PROPRIETARY INFORMATION AND IS FURNISHED
WITH THE UNDERSTANDING THAT IT IS NOT TO BE USED, DIS-
CLOSED OR REPRODUCED IN ANY MANNER WITHOUT THE APPROVAL
OF LECROY CORPORATION

LeCroy CORPORATION

Changed by: jenb	MODEL : 901558 power and decoupling
CHKD	
Date Changed:	DWG NO: 901556
	SH: 2 OF 2 REV : A

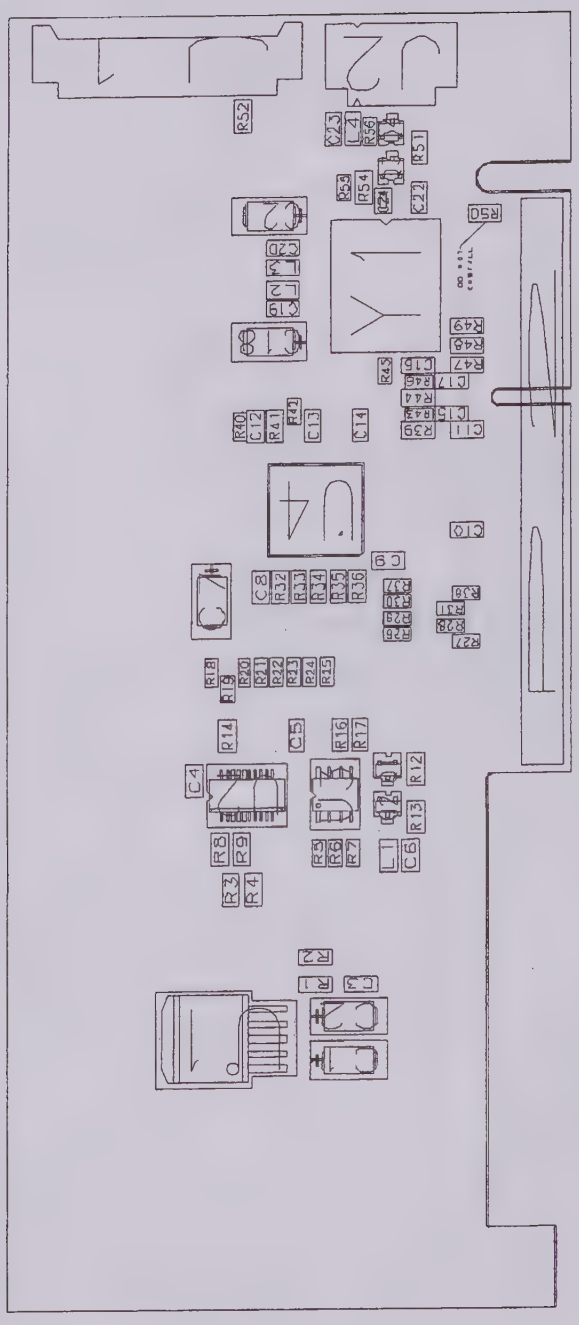

AGP/DVO Interface

Part #: 901558-00 Description: AGP/DVO Interface

Location	Part Number	Description
C1	SM668016226	Cap tant 22UF/16V 20 % L Esr
C2	SM668016226	Cap tant 22UF/16V 20 % L Esr
C3	SM661207104	Cap Cera Chip 20 % .1 UF
C4	SM661207104	Cap Cera Chip 20 % .1 UF
C5	SM661207104	Cap Cera Chip 20 % .1 UF
C6	SM661207103	Cap Cera Chip 20% .01 UF
C7	SM668016226	Cap tant 22UF/16V 20 % L Esr
C8	SM661207104	Cap Cera Chip 20 % .1 UF
C9	SM661207104	Cap Cera Chip 20 % .1 UF
C10	SM661207103	Cap Cera Chip 20% .01 UF
C11	SM661207103	Cap Cera Chip 20% .01 UF
C12	SM661207104	Cap Cera Chip 20 % .1 UF
C13	SM661207104	Cap Cera Chip 20 % .1 UF
C14	SM661207104	Cap Cera Chip 20 % .1 UF
C15	SM661255471	Cap Cera Chip 5 % 470 PF
C16	SM661207104	Cap Cera Chip 20 % .1 UF
C17	SM661255471	Cap Cera Chip 5 % 470 PF
C18	SM668016226	Cap tant 22UF/16V 20 % L Esr
C19	SM661207104	Cap Cera Chip 20 % .1 UF
C20	SM661207104	Cap Cera Chip 20 % .1 UF
C21	SM668016226	Cap tant 22UF/16V 20 % L Esr
C22	SM661207104	Cap Cera Chip 20 % .1 UF
C23	SM661207103	Cap Cera Chip 20% .01 UF
C24	SM661028100	Cap Cera Chip 1UF 10V
J1	SM453020004	Conn Hdr R/A 20 Pos Wire-BD
J2	SM453005002	Header 1 x 5 Shrouded Side Ent
L1	SM669080181	Chip Ferrite Bead
L2	SM669080181	Chip Ferrite Bead
L3	SM669080181	Chip Ferrite Bead
L4	SM669080181	Chip Ferrite Bead
PC1	901787-00	S65 DVO display PCB
Q1	SM280120605	Low Power Nmosfet
Q2	SM281126402	P-Channel Mosfet IRLML6402
Q3	SM280120605	Low Power Nmosfet
Q4	SM281126402	P-Channel Mosfet IRLML6402
R1	SM655040017	Res Chip 1.24K OHM 1% 1/10W 08
R2	SM655040017	Res Chip 1.24K OHM 1% 1/10W 08
R3	SM652101102	Res Chip (E24) 1% 1 K
R4	SM652101102	Res Chip (E24) 1% 1 K
R5	SM652061102	Res Chip 1% 1.0K Ohm .063W
R6	SM652061102	Res Chip 1% 1.0K Ohm .063W
R7	SM652061102	Res Chip 1% 1.0K Ohm .063W
R8	SM652101102	Res Chip (E24) 1% 1 K
R9	SM652101102	Res Chip (E24) 1% 1 K

Part #: 901558-00 Description: AGP/DVO Interface

Location	Part Number	Description
R12	SM653101458	Res Chip 1 % 4.75 K
R13	SM654101000	Chip Jumper Zero Ohms
R14	SM654101000	Chip Jumper Zero Ohms
R16	SM652101222	Res Chip (E24) 1% 2.2 K
R17	SM652101222	Res Chip (E24) 1% 2.2 K
R18	SM652061102	Res Chip 1% 1.0K Ohm .063W
R19	SM652061102	Res Chip 1% 1.0K Ohm .063W
R20	SM652061102	Res Chip 1% 1.0K Ohm .063W
R21	SM652061101	Res Chip 1% 100 Ohm .063W
R22	SM652061101	Res Chip 1% 100 Ohm .063W
R23	SM652061102	Res Chip 1% 1.0K Ohm .063W
R24	SM652061102	Res Chip 1% 1.0K Ohm .063W
R25	SM652061102	Res Chip 1% 1.0K Ohm .063W
R26	SM652061102	Res Chip 1% 1.0K Ohm .063W
R27	SM652061102	Res Chip 1% 1.0K Ohm .063W
R28	SM652061102	Res Chip 1% 1.0K Ohm .063W
R29	SM652061102	Res Chip 1% 1.0K Ohm .063W
R30	SM652061102	Res Chip 1% 1.0K Ohm .063W
R31	SM652061102	Res Chip 1% 1.0K Ohm .063W
R32	SM661207104	Cap Cera Chip 20 % .1 UF
R33	SM652101222	Res Chip (E24) 1% 2.2 K
R34	SM661207104	Cap Cera Chip 20 % .1 UF
R35	SM653101458	Res Chip 1 % 4.75 K
R36	SM653101458	Res Chip 1 % 4.75 K
R37	SM652061102	Res Chip 1% 1.0K Ohm .063W
R38	SM652061102	Res Chip 1% 1.0K Ohm .063W
R39	SM655040017	Res Chip 1.24K OHM 1% 1/10W 08
R40	SM652061510	Res Chip 1% 51.0 Ohm .063W
R41	SM652101222	Res Chip (E24) 1% 2.2 K
R42	SM652061102	Res Chip 1% 1.0K Ohm .063W
R43	SM655030036	Res Thk Film 1% 80.6 Ohm 1/16W
R44	SM655040017	Res Chip 1.24K OHM 1% 1/10W 08
R45	SM652061510	Res Chip 1% 51.0 Ohm .063W
R46	SM655030036	Res Thk Film 1% 80.6 Ohm 1/16W
R47	SM653101458	Res Chip 1 % 4.75 K
R48	SM652101331	Res Chip (E24) 1% 330 Ohm
R49	SM653101458	Res Chip 1 % 4.75 K
R51	SM653101458	Res Chip 1 % 4.75 K
R52	SM654101000	Chip Jumper Zero Ohms
R54	SM653101653	Res Thk Flm 1% 511K Ohm
R55	SM652061102	Res Chip 1% 1.0K Ohm .063W
R56	SM652061102	Res Chip 1% 1.0K Ohm .063W
U1	SM208542915	1.5A Low-Dropout volt reg adj
U2	SM207010002	IC CMOS 8 BIT LOW RES BUS SWIT

Part #: 901558-00 Description: AGP/DVO Interface

Location	Part Number	Description
U3	SM205108132	IC Eeprom 32K Bit IIC Bus
U4	SM207010013	Display Driver DVO to LVDS TFT
Y1	SM311414318	Crystal Oscillator 14.31818MHZ

This page intentionally left blank

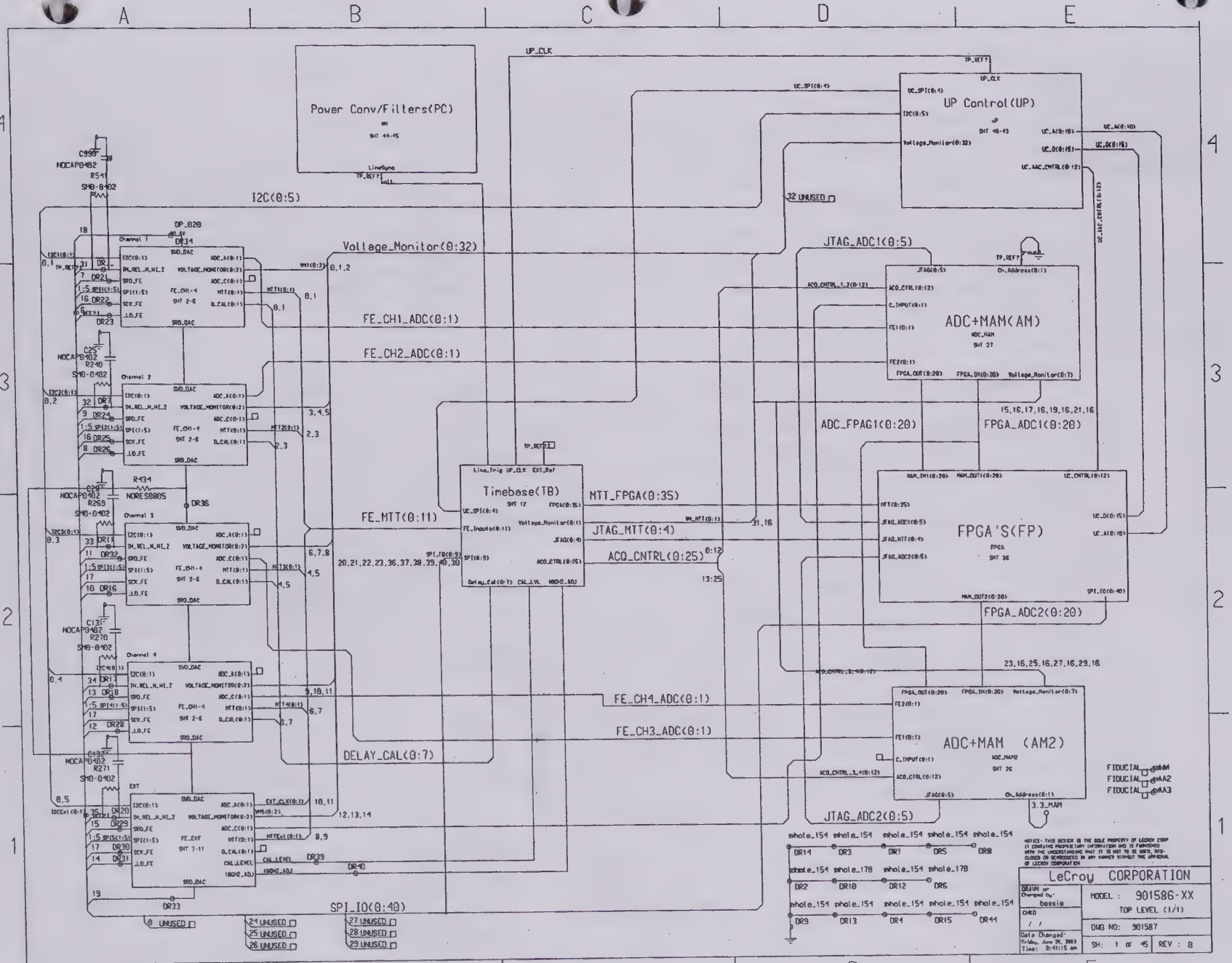
Power Conv/Filters(PC)
UP_CLK
UP Control(UP)
I2C(0:5)
32 UNUSED
Voltage_Monitor(0:32)
JTAG_ADC1(0:5)
ADC+MAM(AM)
FE_CH1_ADC(0:1)
FE_CH2_ADC(0:1)
ADC_FPAG1(0:20)
FPGA_ADC1(0:20)
Timebase(TB)
MTT_FPGA(0:35)
FE_MTT(0:11)
JTAG_MTT(0:4)
ACQ_CNTRL(0:25)
FPGA'S(FP)
FPGA_ADC2(0:20)
FE_CH4_ADC(0:1)
FE_CH3_ADC(0:1)
ADC+MAM (AM2)
DELAY_CAL(0:7)
JTAG_ADC2(0:5)
SPI_IO(0:40)
FIDUCIAL
LeCroy CORPORATION
MODEL : 901586-XX
TOP LEVEL (1/1)
DWG NO: 901587
SH: 1 OF 45
REV : 8

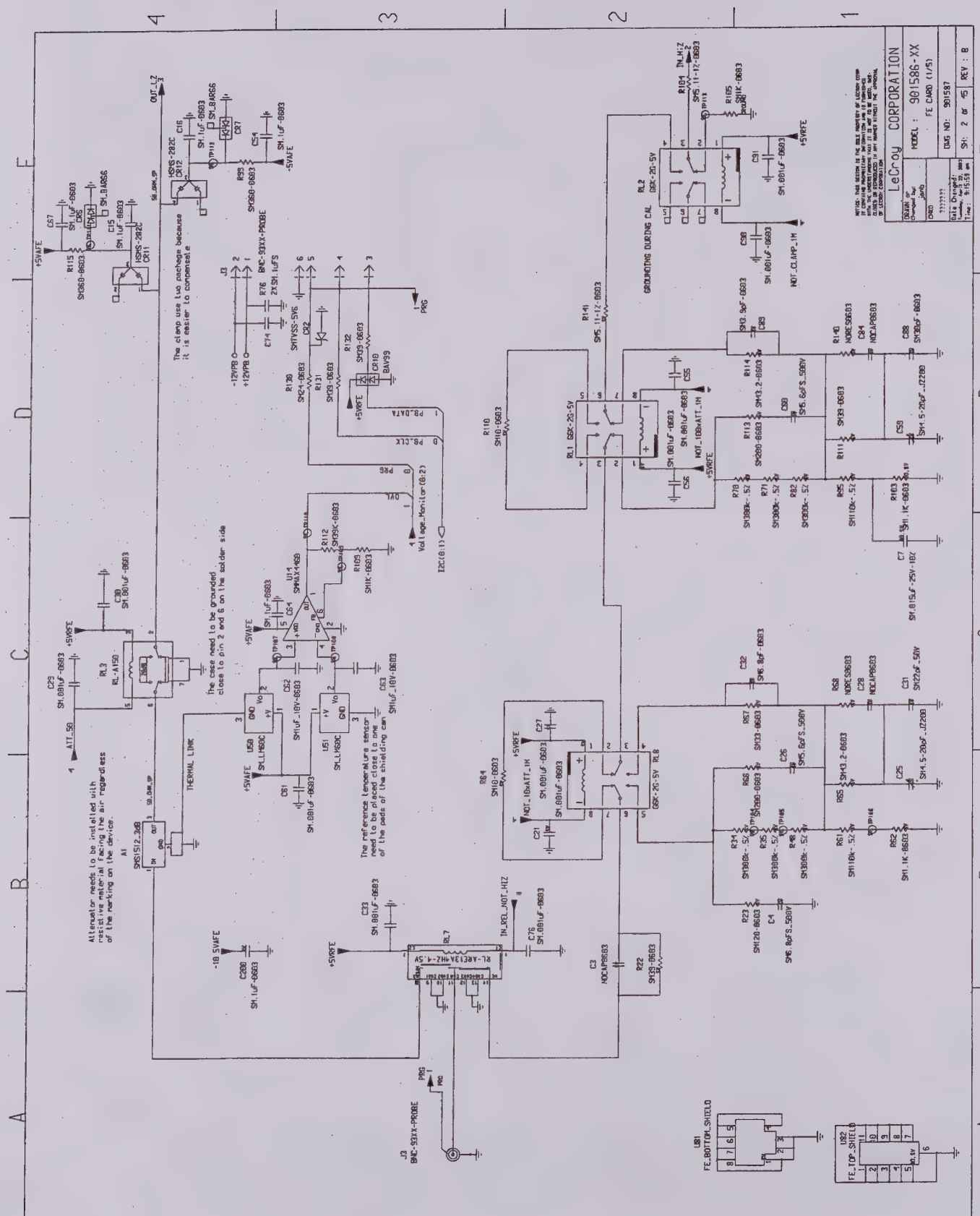
LeCroy CORPORATION
MODEL : 901586-XX
FE CARD (1/5)
DWG NO: 901587
SH: 2 of 45
REV : 8
Drawn by: Steven Jung
Date Changed: 2/15/2013
Time: 9:15:53 am
GROUNDING DURING CAL
THERMAL LINK
Attenuator needs to be installed with resistive material facing the air regardless of the marking on the device.
The case need to be grounded close to pin 2 and 6 on the solder side
The reference temperature sensor need to be placed close to one of the pads of the shielding can
The clamp use two package because it is easier to compensate
Voltage_Monitor(0:2)
I2C(0:1)
PB_DATA
PB_CLK
IN_REL_NOT_HIZ
FE_BOTTOM_SHIELD
FE_TOP_SHIELD
BNC-93Xx-PROBE

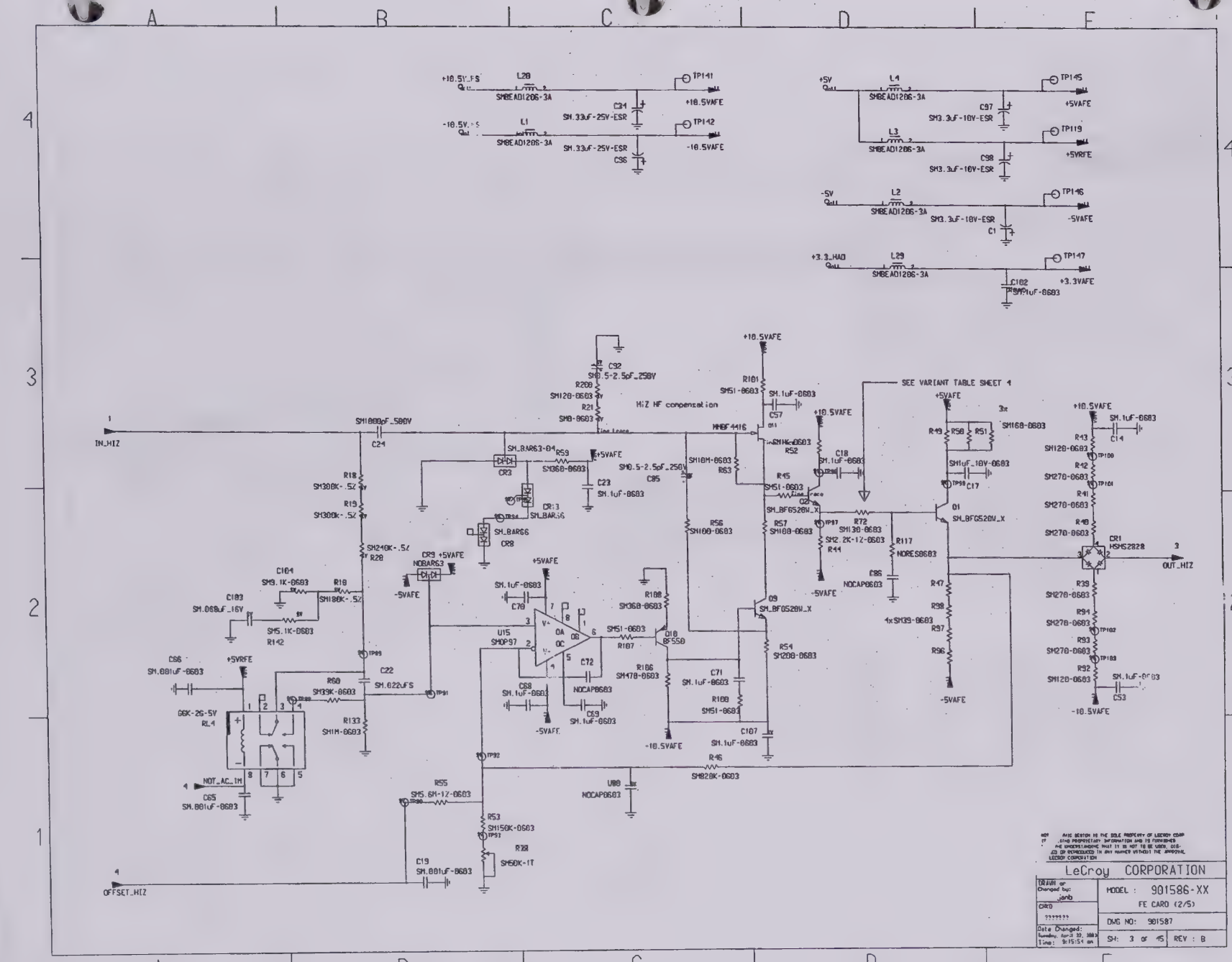

LeCroy CORPORATION
MODEL : 901586-XX
FE CARD (2/5)
DWG NO: 901587
SH: 3 of 45
REV : B
IN_HIZ
OFFSET_HIZ
OUT_HIZ
HiZ HF compensation
SEE VARIANT TABLE SHEET 4
+10.5VAFE
-10.5VAFE
+5VAFE
-5VAFE
+5VRFE
+3.3VAFE
NOT_AC_IN

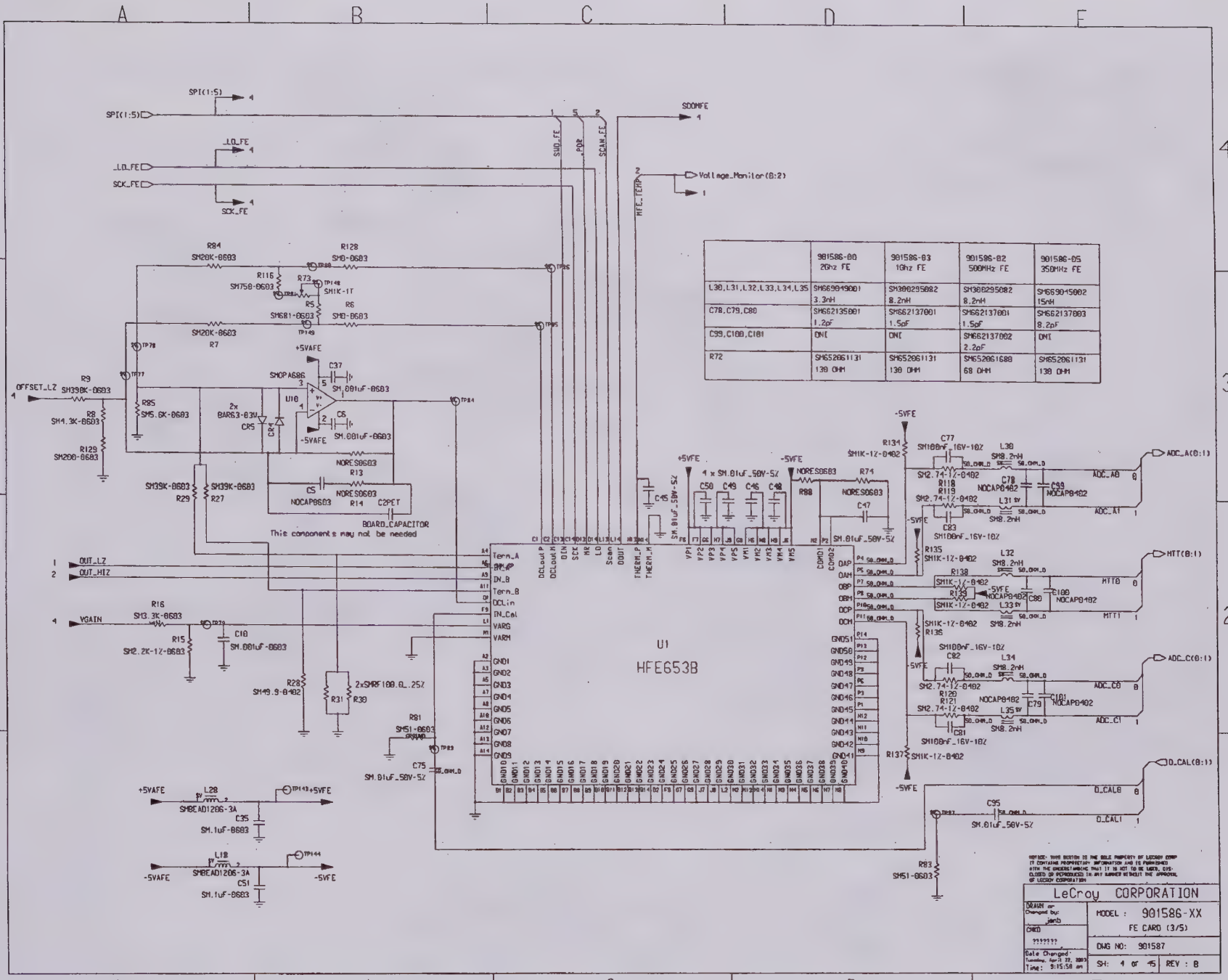

	901586-00 2Ghz FE	901586-03 1Ghz FE	901586-02 500MHz FE	901586-05 350MHz FE
L30,L31,L32,L33,L34,L35	SM6690490001 3.3nH	SM3802950B2 8.2nH	SM3802950B2 8.2nH	SM6690450B2 15nH
C78,C79,C80	SM662135001 1.2pF	SM662137001 1.5pF	SM662137001 1.5pF	SM662137003 8.2pF
C99,C100,C101	DNI	DNI	SM662137002 2.2pF	DNI
R72	SM6520611131 130 OHM	SM6520611131 130 OHM	SM6520611B8 68 OHM	SM6520611131 130 OHM

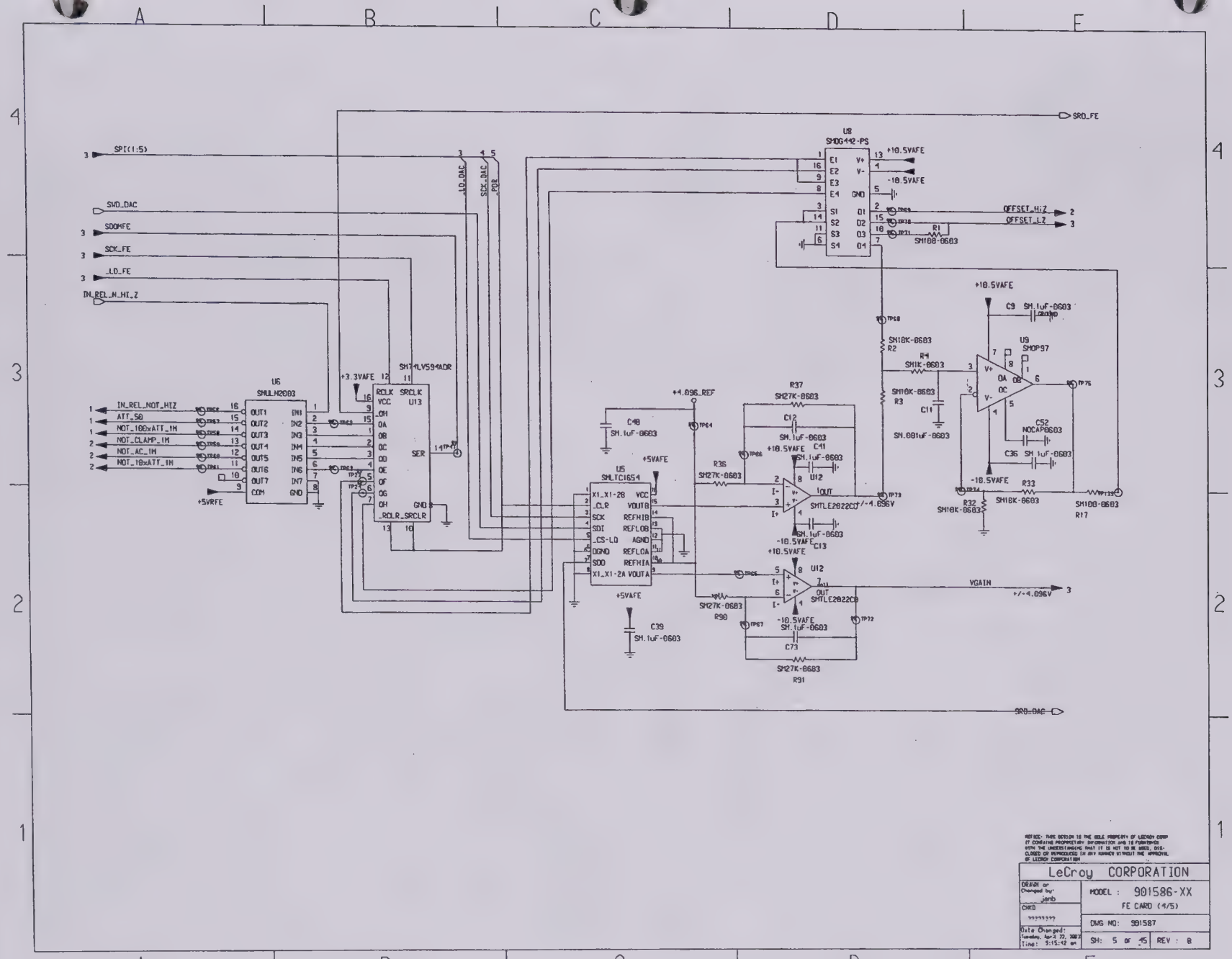

NOTICE: THIS DESIGN IS THE SOLE PROPERTY OF LECROY CORP IT CONTAINS PROPRIETARY INFORMATION AND IS FURNISHED WITH THE UNDERSTANDING THAT IT IS NOT TO BE USED, DISCLOSED OR REPRODUCED IN ANY MANNER WITHOUT THE APPROVAL OF LECROY CORPORATION

LeCroy CORPORATION	
DRAWN or Changed by: jenb	MODEL : 901586-XX FE CARD (4/5)
CHKD ?????????	DWG NO: 901587
Date Changed: Tuesday, Apr 3 22, 2003 Time: 3:15:42 pm	SH: 5 of 15 REV : B

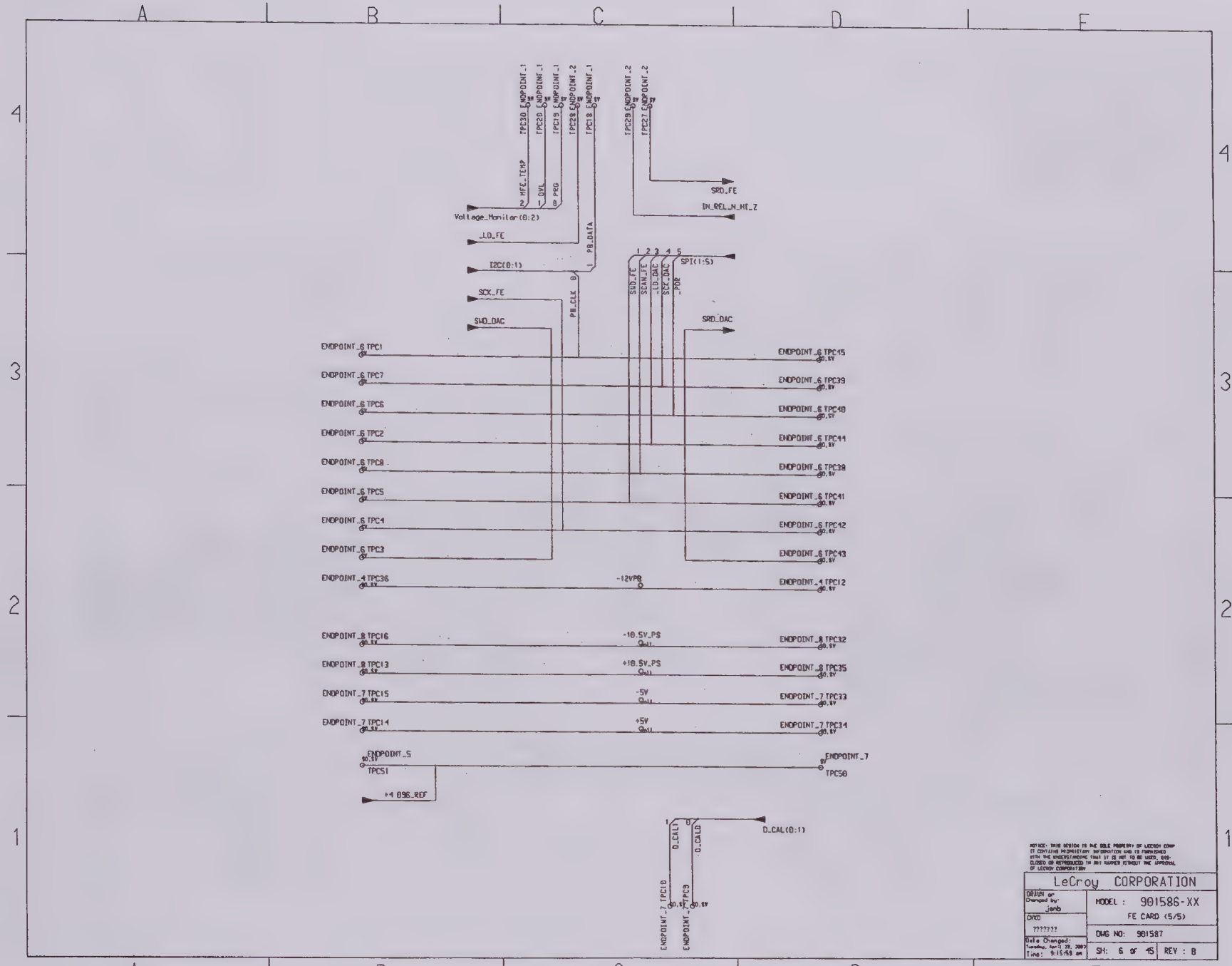
TPC30 ENDPOINT_1
TPC20 ENDPOINT_1
TPC19 ENDPOINT_1
TPC28 ENDPOINT_2
TPC18 ENDPOINT_1
TPC29 ENDPOINT_2
TPC27 ENDPOINT_2
MFE_TEMP
OVL
PRG
SRD_FE
IN_REL_N_HI_Z
Voltage_Monitor(0:2)
LD_FE
PB_DATA
I2C(0:1)
SPI(1:5)
SCK_FE
PB_CLK
SHD_FE
SCAN_FE
LD_DAC
SCK_DAC
POR
SHD_DAC
SRD_DAC
ENDPOINT_6 TPC1
ENDPOINT_6 TPC7
ENDPOINT_6 TPC6
ENDPOINT_6 TPC2
ENDPOINT_6 TPC0
ENDPOINT_6 TPC5
ENDPOINT_6 TPC4
ENDPOINT_6 TPC3
ENDPOINT_4 TPC36
ENDPOINT_6 TPC15
ENDPOINT_6 TPC39
ENDPOINT_6 TPC40
ENDPOINT_6 TPC41
ENDPOINT_6 TPC38
ENDPOINT_6 TPC41
ENDPOINT_6 TPC42
ENDPOINT_6 TPC43
-12VPB
ENDPOINT_4 TPC12
ENDPOINT_8 TPC16
ENDPOINT_8 TPC13
ENDPOINT_7 TPC15
ENDPOINT_7 TPC14
+10.5V_PS
+10.5V_PS
-5V
+5V
ENDPOINT_8 TPC32
ENDPOINT_8 TPC35
ENDPOINT_7 TPC33
ENDPOINT_7 TPC34
ENDPOINT_5
TPC51
+4.096_REF
ENDPOINT_7
TPC50
D_CAL(0:1)
D_CALI
D_CALQ
ENDPOINT_7 TPC10
ENDPOINT_7 TPC9
LeCroy CORPORATION
MODEL : 901586-XX
FE CARD (5/5)
DMG NO: 901587
SH: 6 OF 15
REV : B

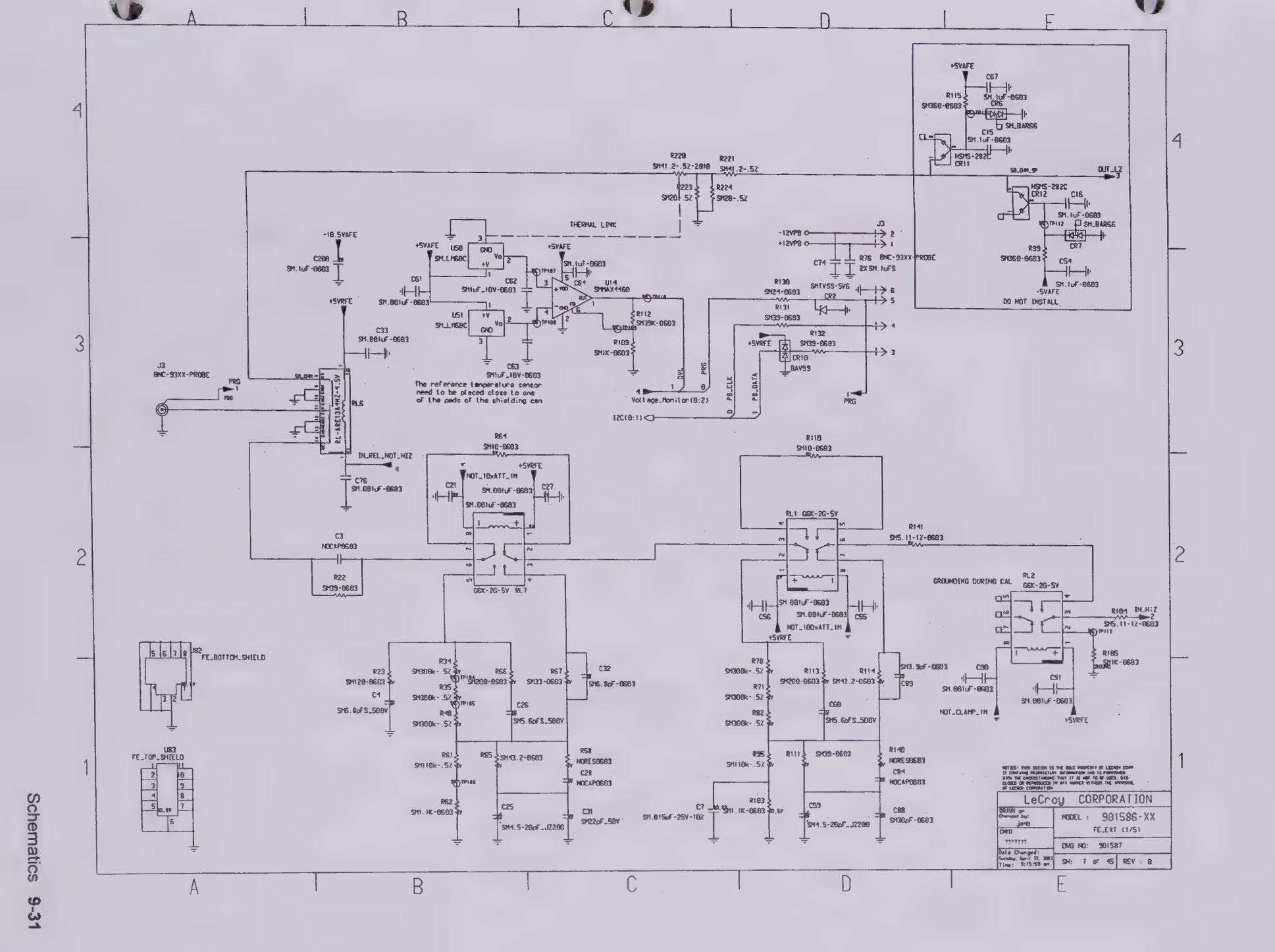
THERMAL LINK
The reference temperature sensor need to be placed close to one of the pads of the shielding can
DO NOT INSTALL
GROUNDING DURING CAL
LeCroy CORPORATION
MODEL : 901586-XX
FE_EXT (1/5)
DWG NO: 901587
SH: 7 OF 45
REV : B

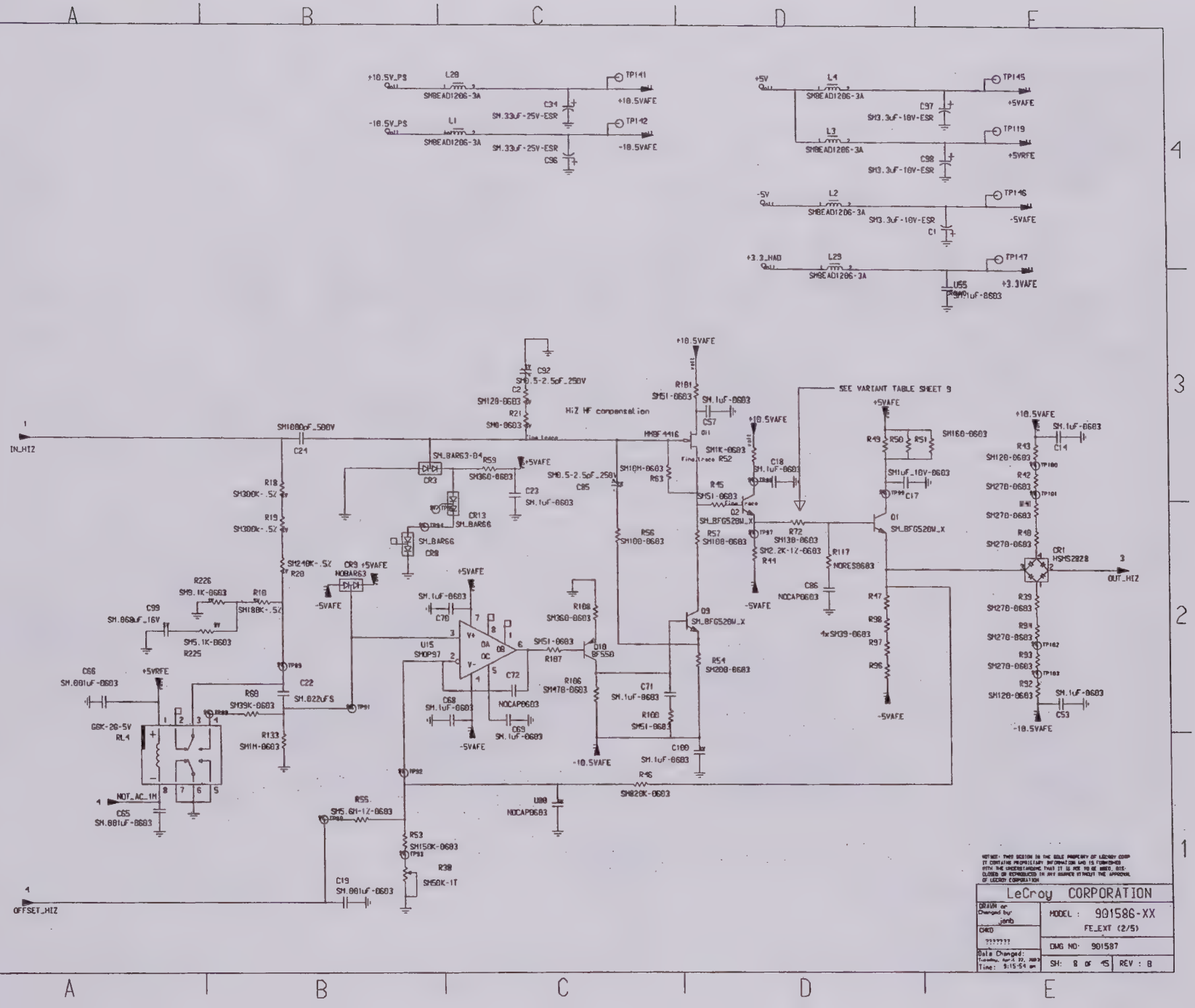
+10.5V_PS
L28
SMBEAD1206-3A
TP141
+10.5VAFE
C34
SM.33uF-25V-ESR
-10.5V_PS
L1
TP142
-10.5VAFE
C36
+5V
L4
TP145
+5VAFE
C97
SM3.3uF-10V-ESR
L3
TP119
+5VRFE
C98
-5V
L2
TP146
-5VAFE
C1
+3.3_MAD
L29
TP147
+3.3VAFE
U55
SM.01uF-0603
SEE VARIANT TABLE SHEET 9
IN_HIZ
SM1000pF_500V
C24
C92
SM0.5-2.5pF_250V
C2
SM120-0603
R21
SM0-0603
Hi Z HF compensation
+10.5VAFE
R181
SM51-0603
SM.1uF-0603
C57
MMBF4416
SM1K-0603
Fine Trace R52
R45
SM51-0603
Fine Trace
Q2
SM_BFG520W_X
R57
SM100-0603
R56
SM100-0603
SM10M-0603
R63
C18
SM.1uF-0603
SM1uF_10V-0603
C17
Q1
SM_BFG520W_X
R72
SM130-0603
SM2.2K-1Z-0603
R44
R117
NORES0603
C86
NOCAP0603
4xSM39-0603
R47
R98
R97
R96
-5VAFE
+5VAFE
R49
R50
R51
SM150-0603
+10.5VAFE
SM.1uF-0603
C14
R43
SM120-0603
R42
SM270-0603
R41
SM270-0603
R40
SM270-0603
CR1
HSMS2828
OUT_HIZ
R39
SM270-0603
R94
SM270-0603
R93
SM270-0603
R92
SM120-0603
SM.1uF-0603
C53
-10.5VAFE
R23
SM5.11K-0603
R225
R226
SM9.1K-0603
R18
SM300K-.5Z
R19
SM300K-.5Z
R20
SM240K-.5Z
R10
SM180K-.5Z
C99
SM.068uF_16V
CR3
SM_BAR63-04
R59
SM360-0603
C23
SM.1uF-0603
C95
SM0.5-2.5pF_250V
CR13
SM_BAR66
CR8
SM_BAR66
CR9 +5VAFE
NOBAR63
-5VAFE
+5VAFE
SM.1uF-0603
C70
R108
SM360-0603
U15
SM0P97
R187
SM51-0603
D10
BAS50
C72
NOCAP0603
C68
SM.1uF-0603
C69
SM.1uF-0603
-5VAFE
R106
SM470-0603
C71
SM.1uF-0603
R100
SM51-0603
C100
SM.1uF-0603
-10.5VAFE
D9
SM_BFG520W_X
R54
SM200-0603
C66
SM.001uF-0603
+5VRFE
C22
SM.022uFS
R69
SM39K-0603
R133
SM1M-0603
GSK-26-5V
RL4
NOT_AC_1M
C65
SM.001uF-0603
R46
SM820K-0603
U80
NOCAP0603
R55
SM5.61-1Z-0603
R53
SM150K-0603
R38
SM50K-1T
C19
SM.001uF-0603
OFFSET_HIZ
LeCroy CORPORATION
DRAWN or Changed by: jonb
CHKD: ???????
Date Changed: Tuesday, April 27, 2004 Time: 9:15:54 am
MODEL : 901586-XX
FE_EXT (2/5)
DWG NO: 901587
SH: 8 OF 45
REV : B

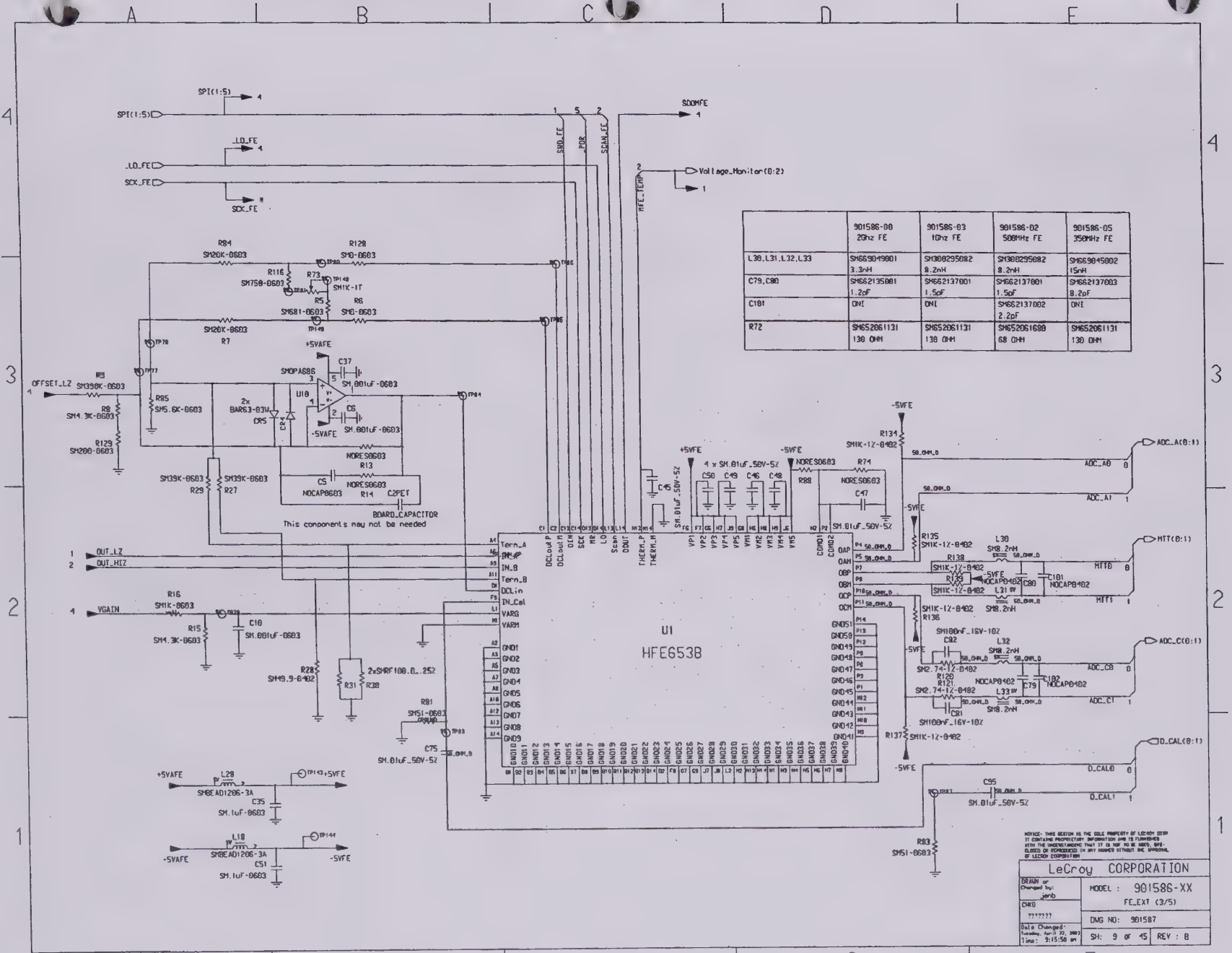

	901586-00 2Ghz FE	901586-03 1Ghz FE	901586-02 500MHz FE	901586-05 350MHz FE
L30,L31,L32,L33	SM669049001 3.3nH	SM380295082 8.2nH	SM380295082 8.2nH	SM669045002 15nH
C79,C80	SM662135001 1.2pF	SM662137001 1.5pF	SM662137001 1.5pF	SM662137003 8.2pF
C101	DNI	DNI	SM662137002 2.2pF	DNI
R72	SM652061131 130 OHM	SM652061131 130 OHM	SM652061698 68 OHM	SM652061131 130 OHM

NOTICE: THIS DESIGN IS THE SOLE PROPERTY OF LECROY CORP IT CONTAINS PROPRIETARY INFORMATION AND IS FURNISHED WITH THE UNDERSTANDING THAT IT IS NOT TO BE USED, DISCLOSED OR REPRODUCED IN ANY MANNER WITHOUT THE APPROVAL OF LECROY CORPORATION

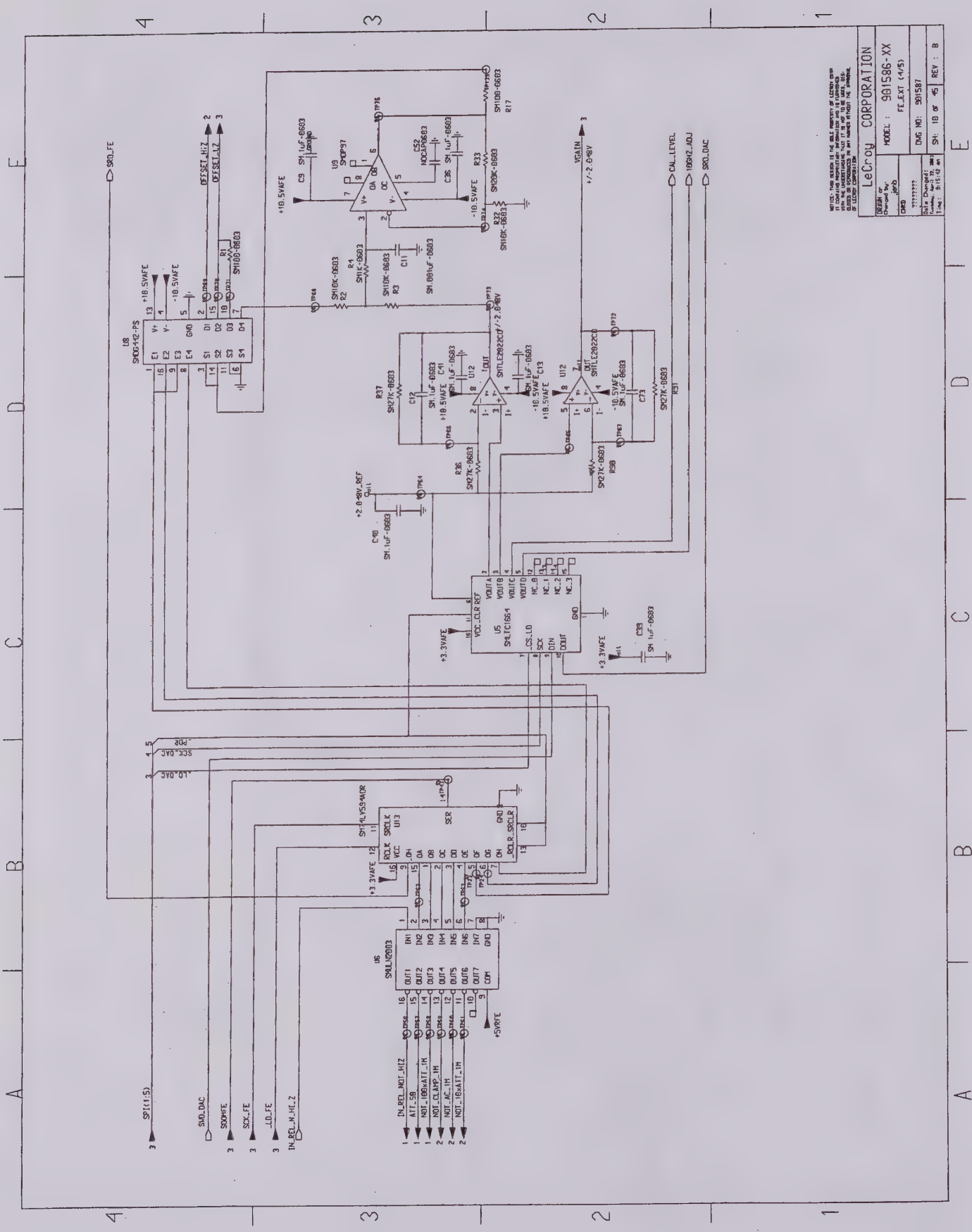
LeCroy CORPORATION
MODEL : 901586-XX
FE_EXT (4/5)
DWG NO: 901587
SH: 10 OF 45
REV : B

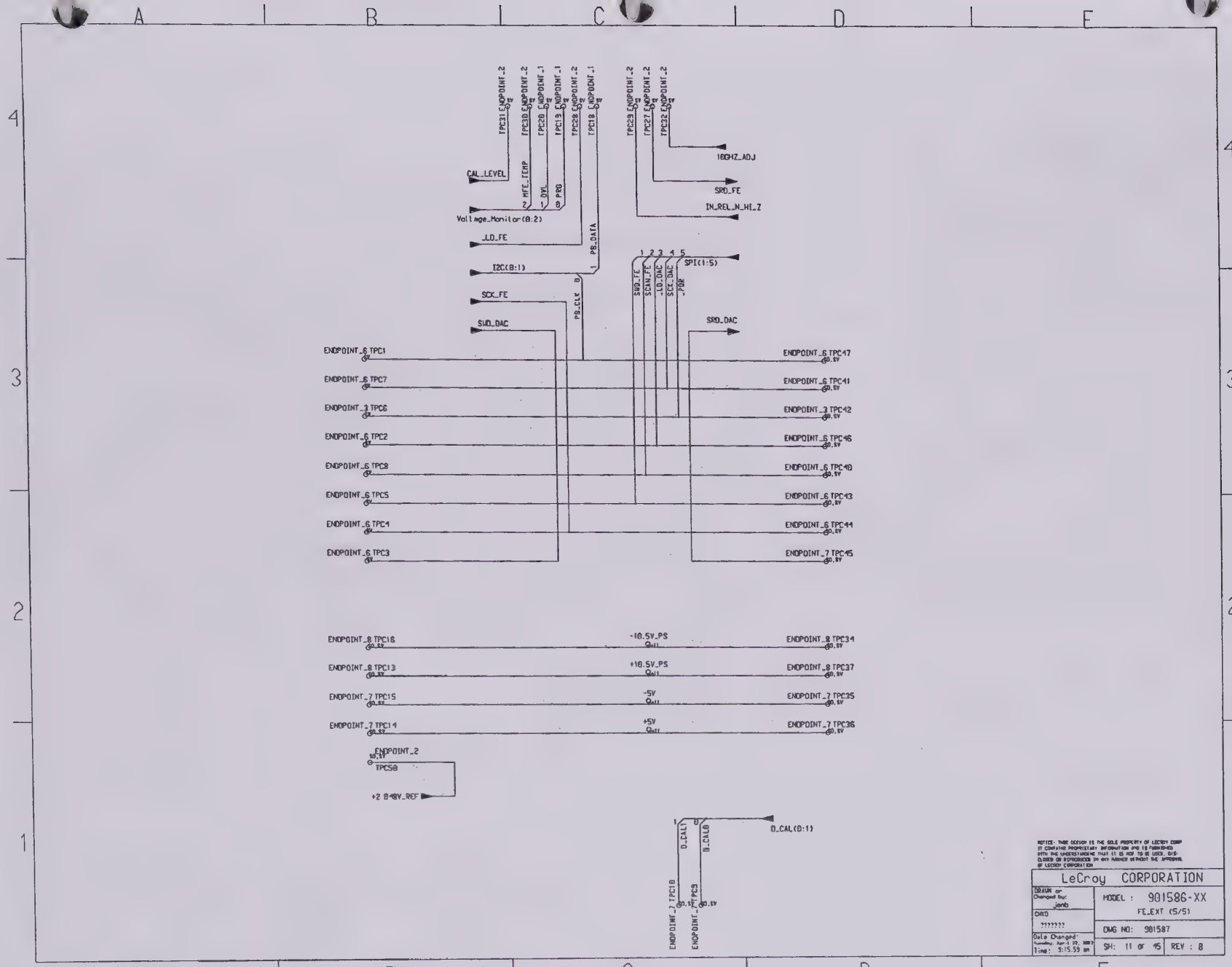
TPC31 ENDPOINT_2
TPC30 ENDPOINT_2
TPC20 ENDPOINT_1
TPC19 ENDPOINT_1
TPC28 ENDPOINT_2
TPC18 ENDPOINT_1
TPC29 ENDPOINT_2
TPC27 ENDPOINT_2
TPC32 ENDPOINT_2
CAL_LEVEL
MFE_TEMP
DVL
PRB
18GHZ_ADJ
SRD_FE
IN_REL_N_HI_Z
Voltage_Monitor(8:2)
LD_FE
PB_DATA
I2C(8:1)
SPI(1:5)
SCK_FE
PB_CLK
SWD_FE
SCAN_FE
LD_DAC
SCK_DAC
PDR
SWD_DAC
SRD_DAC
ENDPOINT_6 TPC1
ENDPOINT_6 TPC7
ENDPOINT_3 TPC6
ENDPOINT_6 TPC2
ENDPOINT_6 TPC8
ENDPOINT_6 TPC5
ENDPOINT_6 TPC4
ENDPOINT_6 TPC3
ENDPOINT_6 TPC47
ENDPOINT_6 TPC41
ENDPOINT_3 TPC42
ENDPOINT_6 TPC46
ENDPOINT_6 TPC40
ENDPOINT_6 TPC43
ENDPOINT_6 TPC44
ENDPOINT_7 TPC45
ENDPOINT_8 TPC16
ENDPOINT_8 TPC13
ENDPOINT_7 TPC15
ENDPOINT_7 TPC14
-10.5V_PS
+10.5V_PS
-5V
+5V
ENDPOINT_8 TPC34
ENDPOINT_8 TPC37
ENDPOINT_7 TPC35
ENDPOINT_7 TPC36
ENDPOINT_2
TPC50
+2.048V_REF
D_CAL(0:1)
D_CAL1
D_CAL0
ENDPOINT_7 TPC10
ENDPOINT_7 TPC23
NOTICE- THIS DESIGN IS THE SOLE PROPERTY OF LECROY CORP
IT CONTAINS PROPRIETARY INFORMATION AND IS FURNISHED
WITH THE UNDERSTANDING THAT IT IS NOT TO BE USED, DIS-
CLOSED OR REPRODUCED IN ANY MANNER WITHOUT THE APPROVAL
OF LECROY CORPORATION
LeCroy CORPORATION
DRAWN or Changed by: jamb
CKD: ???????
Date Changed: Tuesday, Apr 1 22, 2003 Time: 9:15:59 am
MODEL : 901586-XX
FE_EXT (5/5)
DWG NO: 901587
SH: 11 OF 15
REV : 8

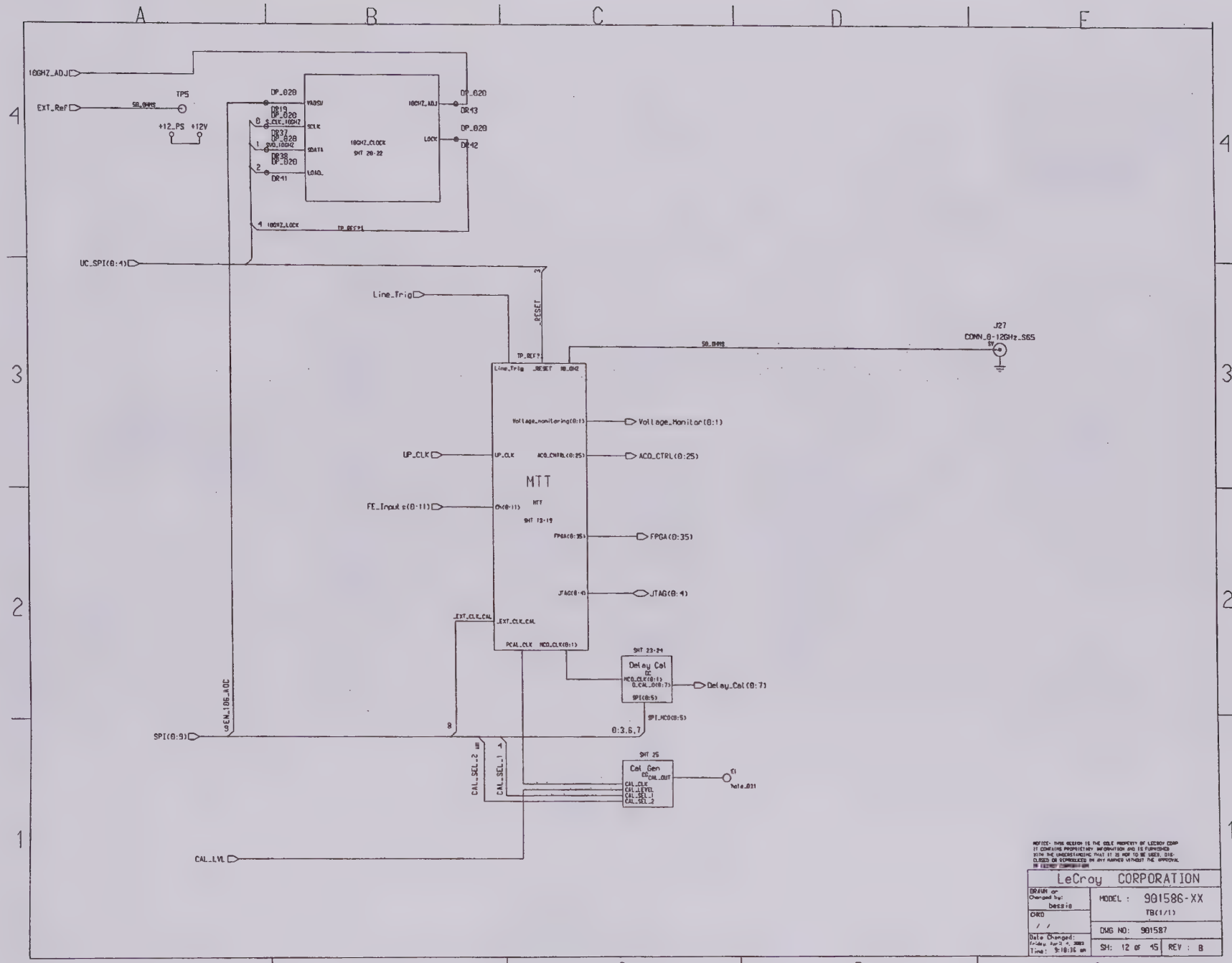
10GHZ_ADJ
EXT_Ref
TP5
+12_PS
+12V
10GHZ_CLOCK
SHT 20-22
UC_SPI(0:4)
Line_Trig
_RESET
J27
CONN_0-12GHz_SMS
MTT
Voltage_monitoring(0:1)
Voltage_Monitor(0:1)
UP_CLK
ACQ_CTRL(0:25)
FE_Inputs(0:11)
FPGA(0:35)
JTAG(0:4)
_EXT_CLK_CAL
SHT 23-24
Delay Cal
Delay_Cal(0:7)
SPI(0:5)
SPI_MCO(0:5)
SPI(0:9)
SHT 25
Cal_Gen
CAL_OUT
CAL_SEL_2
CAL_SEL_1
CAL_LVL
LeCroy CORPORATION
MODEL : 901586-XX
TB(1/1)
DWG NO: 901587
SH: 12 OF 15
REV : B

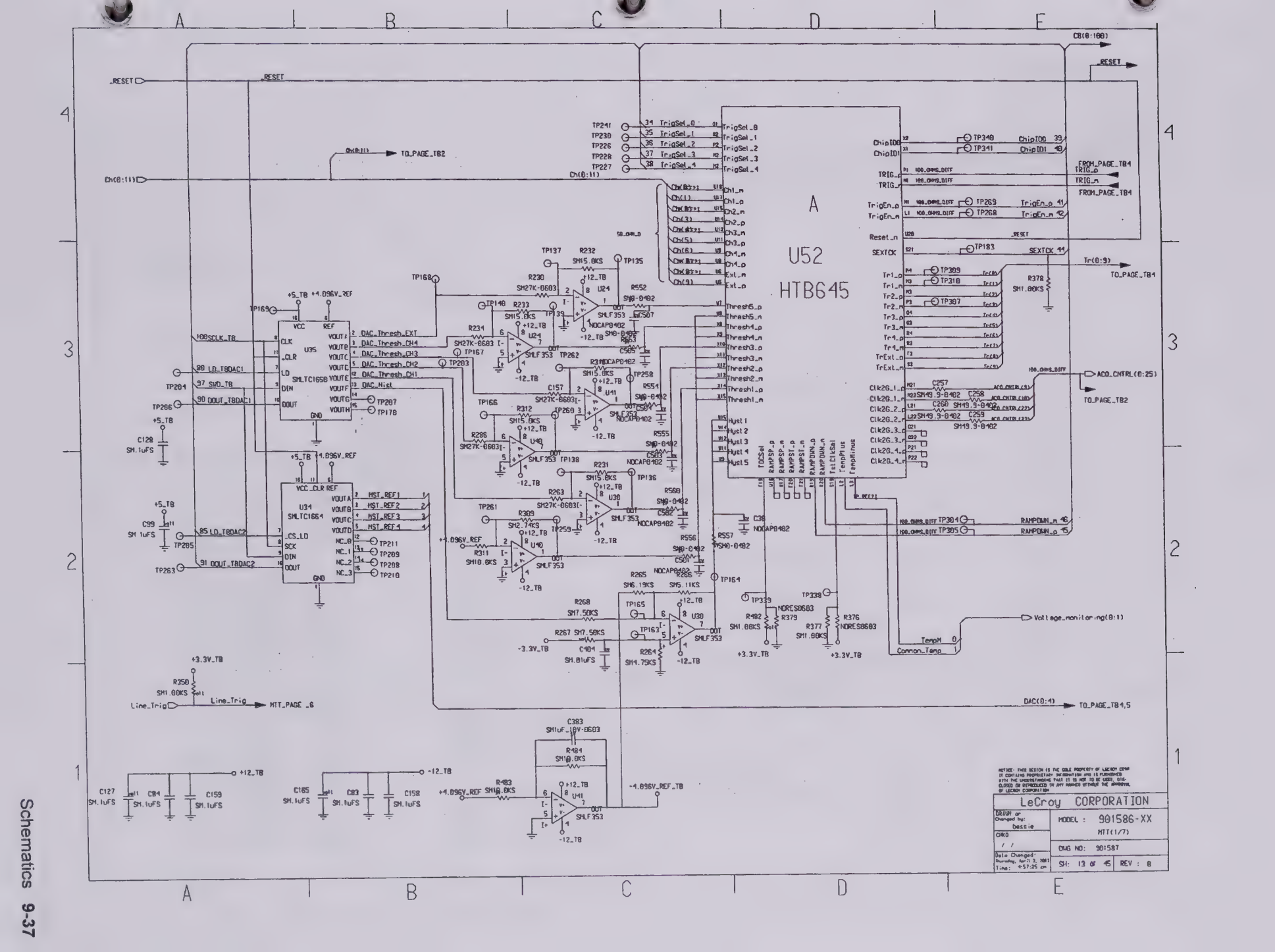
A
U52
HTB645
LeCroy CORPORATION
MODEL : 901586-XX
MTT(1/7)
DWG NO: 901587
SH: 13 OF 45
REV : B
Schematics 9-37

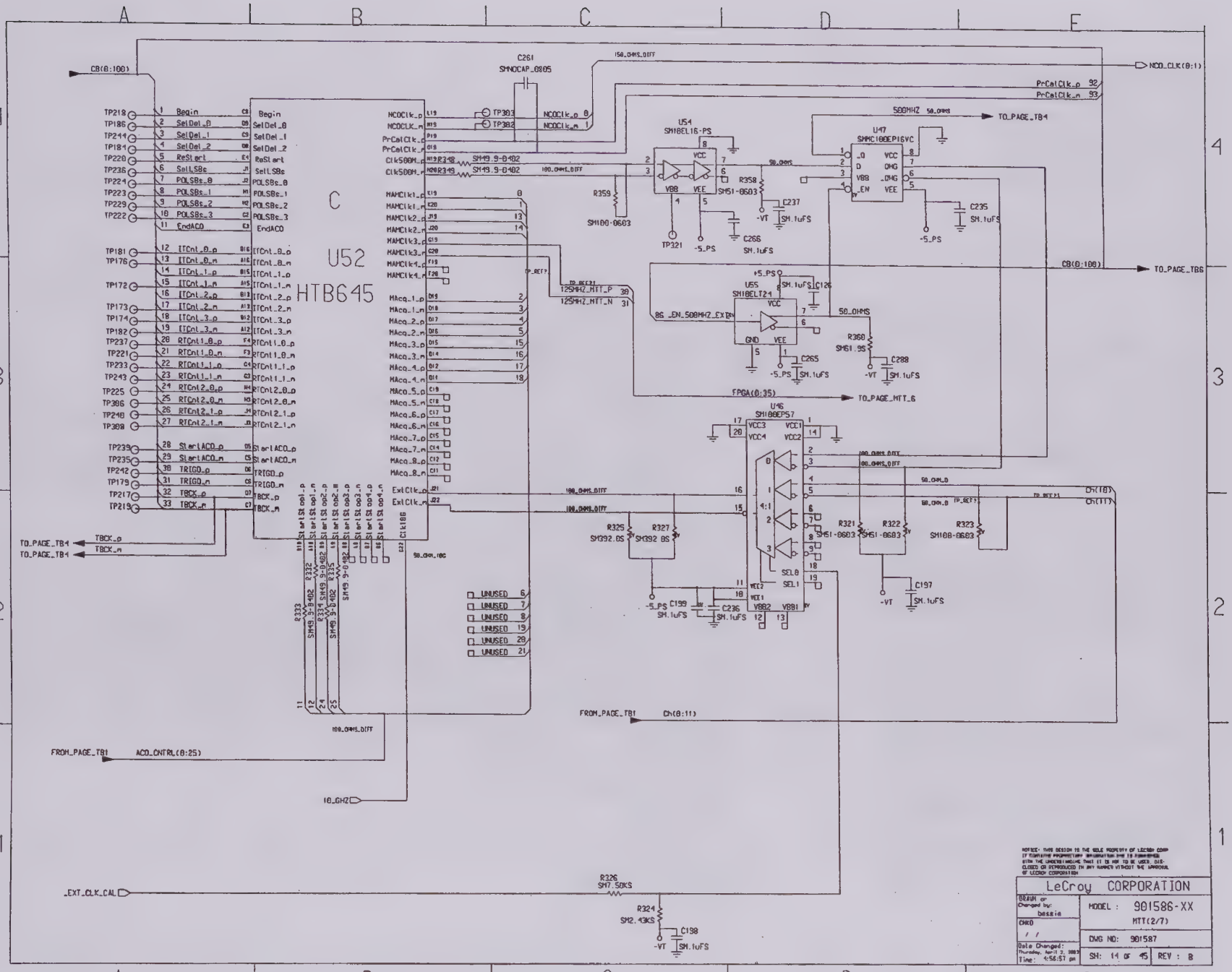
CB(8:100)
U52
HTB645
C261
SMNOCAP_0805
NCO_CLK(8:1)
PrCalClk_p 92
PrCalClk_n 93
500MHZ
TO_PAGE_TB4
TO_PAGE_TB6
U54
SM10ELT6-PS
U47
SMMC100EP16VC
U55
SM10ELT24
U46
SM100EPS7
FPGA(8:35)
TO_PAGE_MTT_6
FROM_PAGE_TB1
ACQ_CNTRL(8:25)
10_GHZ
EXT_CLK_CAL
LeCroy CORPORATION
MODEL : 901586-XX
MTT(2/7)
DWG NO: 901587
SH: 14 OF 45
REV : B

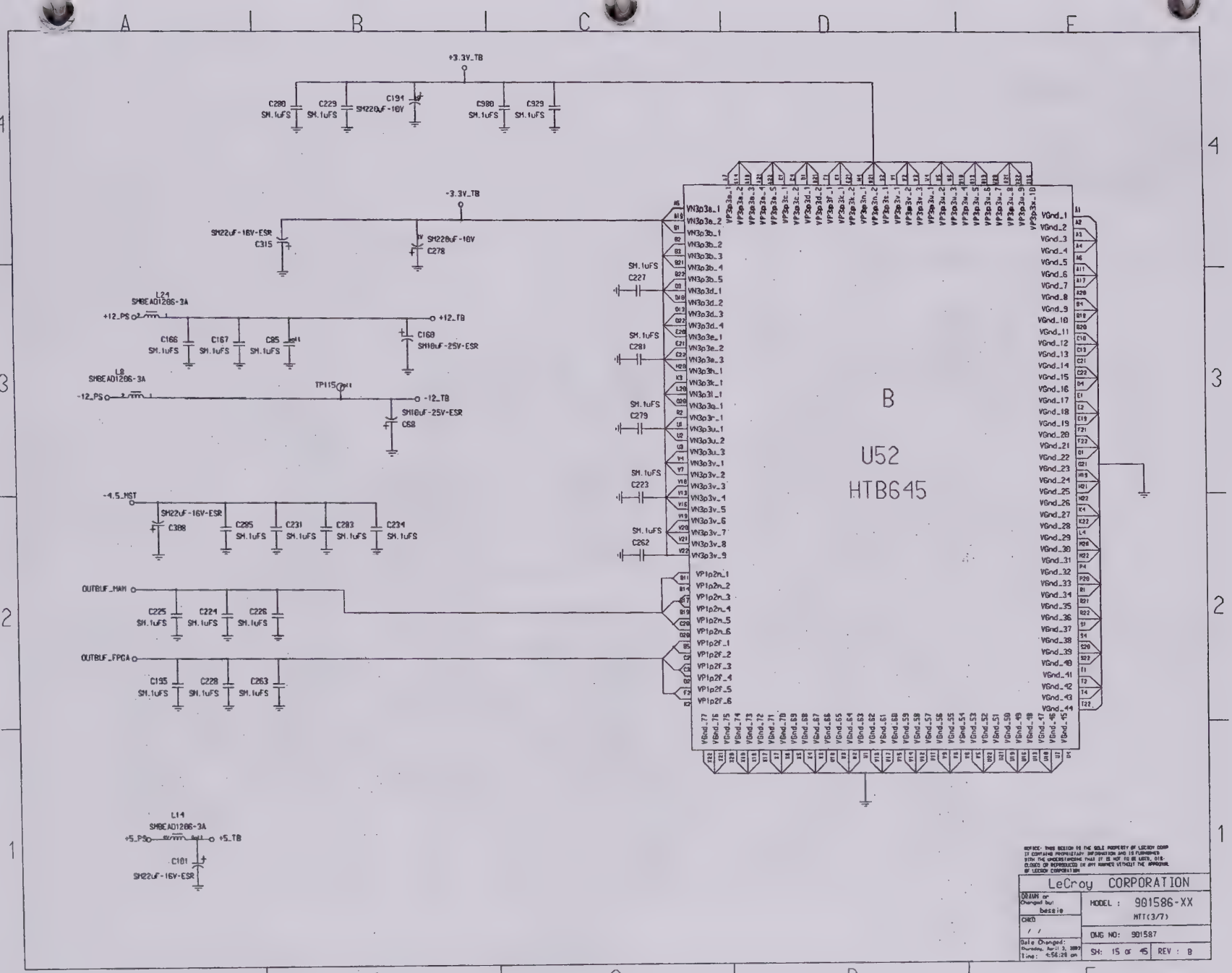
+3.3V_TB
C280 SM.1uFS
C229 SM.1uFS
C194 SM220uF-10V
C980 SM.1uFS
C929 SM.1uFS
-3.3V_TB
SM22uF-16V-ESR C315
SM220uF-10V C278
L24 SMBEAD1206-3A
+12_PS
+12_TB
C166 SM.1uFS
C167 SM.1uFS
C85 SM.1uFS
C169 SM18uF-25V-ESR
L9 SMBEAD1206-3A
-12_PS
TP115
-12_TB
SM18uF-25V-ESR C58
-4.5_MST
SM22uF-16V-ESR C388
C285 SM.1uFS
C231 SM.1uFS
C283 SM.1uFS
C234 SM.1uFS
OUTBUF_MAN
C225 SM.1uFS
C224 SM.1uFS
C226 SM.1uFS
OUTBUF_FPGA
C195 SM.1uFS
C228 SM.1uFS
C263 SM.1uFS
L14 SMBEAD1206-3A
+5_PS
+5_TB
C101 SM22uF-16V-ESR
C227 SM.1uFS
C281 SM.1uFS
C279 SM.1uFS
C223 SM.1uFS
C262 SM.1uFS
B
U52
HTB645
LeCroy CORPORATION
DRAWN or Changed by: bessie
CHKD
MODEL : 901586-XX
HTT(3/7)
DWG NO: 901587
SH: 15 OF 45
REV : B

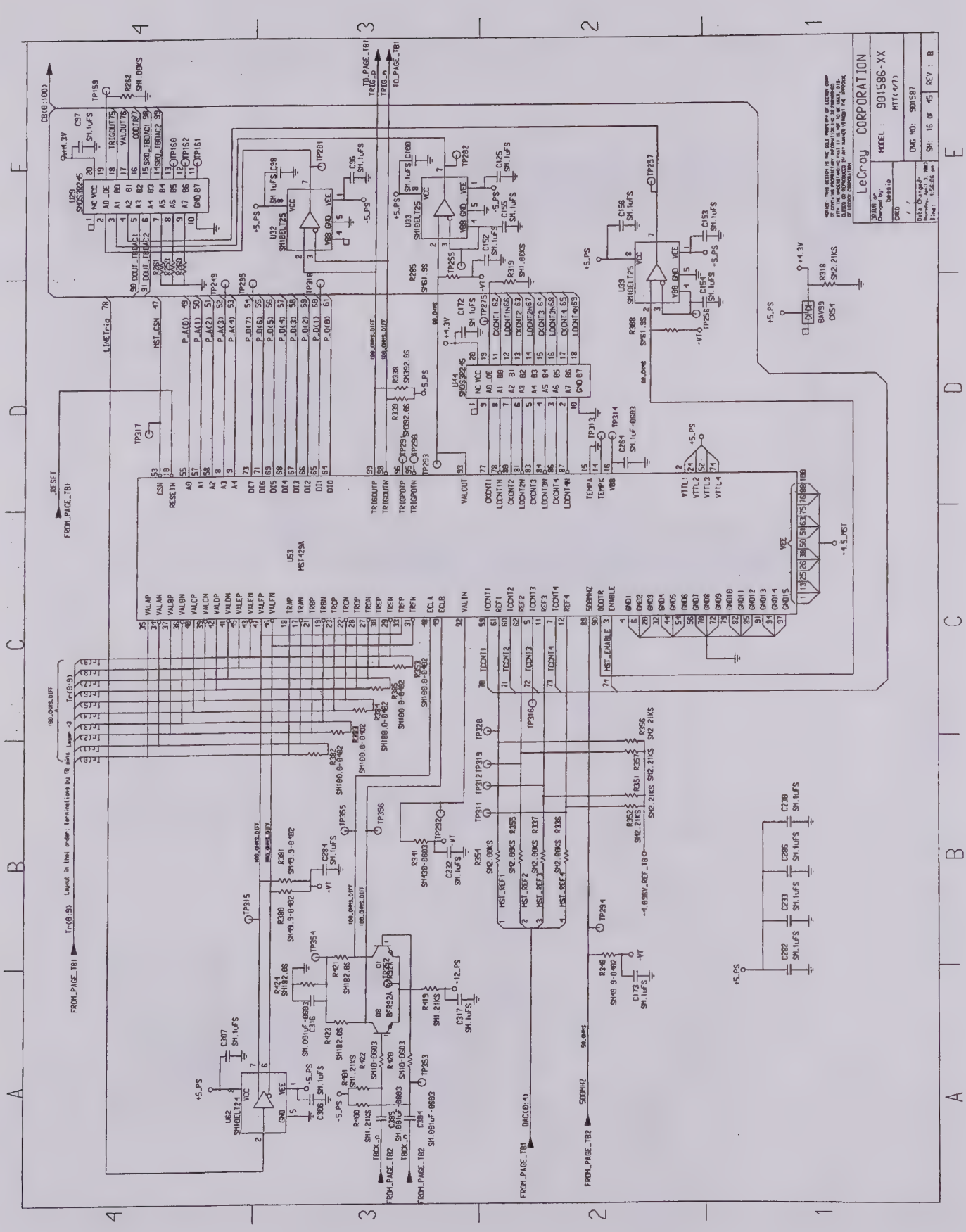
LeCroy CORPORATION
MODEL : 901586-XX
MTT(4/7)
DWG NO: 901587
SH: 16 OF 45
REV : B

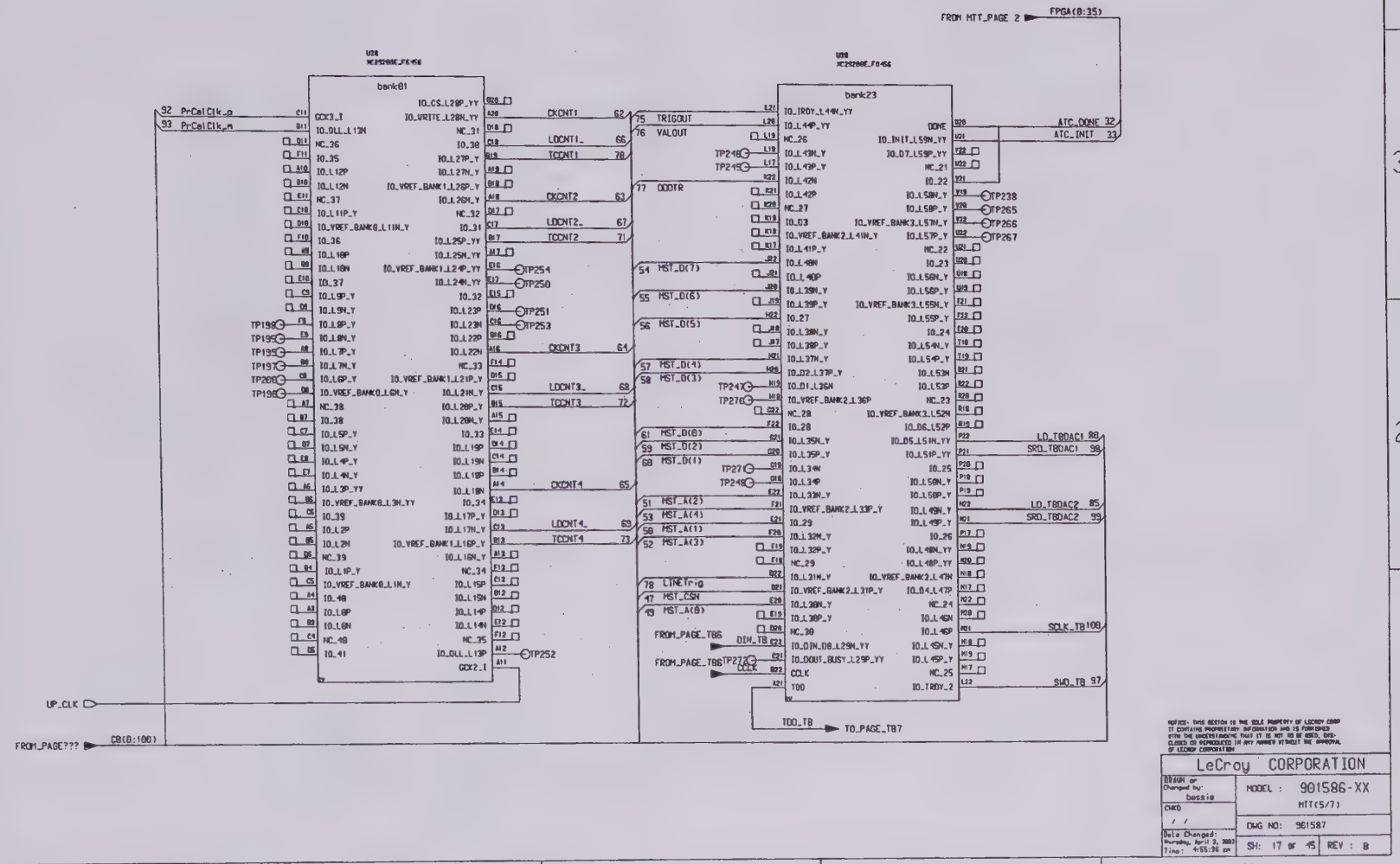
FROM MTT_PAGE 2
FPGA(0:35)
bank01
bank23
PrCalClk_p
PrCalClk_n
CKCNT1
LDCNT1_
TCCNT1
CKCNT2
LDCNT2_
TCCNT2
CKCNT3
LDCNT3_
TCCNT3
CKCNT4
LDCNT4_
TCCNT4
TRIGOUT
VALOUT
ODDTR
MST_D(7)
MST_D(6)
MST_D(5)
MST_D(4)
MST_D(3)
MST_D(0)
MST_D(2)
MST_D(1)
MST_A(2)
MST_A(4)
MST_A(1)
MST_A(3)
MST_A(8)
LINETrig
MST_CSN
FROM_PAGE_TB6
DIN_TB
FROM_PAGE_TB6
DCLK
DONE
ATC_DONE
ATC_INIT
LD_TBDAC1
SRD_TBDAC1
LD_TBDAC2
SRD_TBDAC2
SCLK_TB
SWD_TB
TDO_TB
TO_PAGE_TB7
UP_CLK
FROM_PAGE???
CB(0:100)
LeCroy CORPORATION
MODEL : 901586-XX
MTT(5/7)
DWG NO: 961587
SH: 17 of 45
REV : B

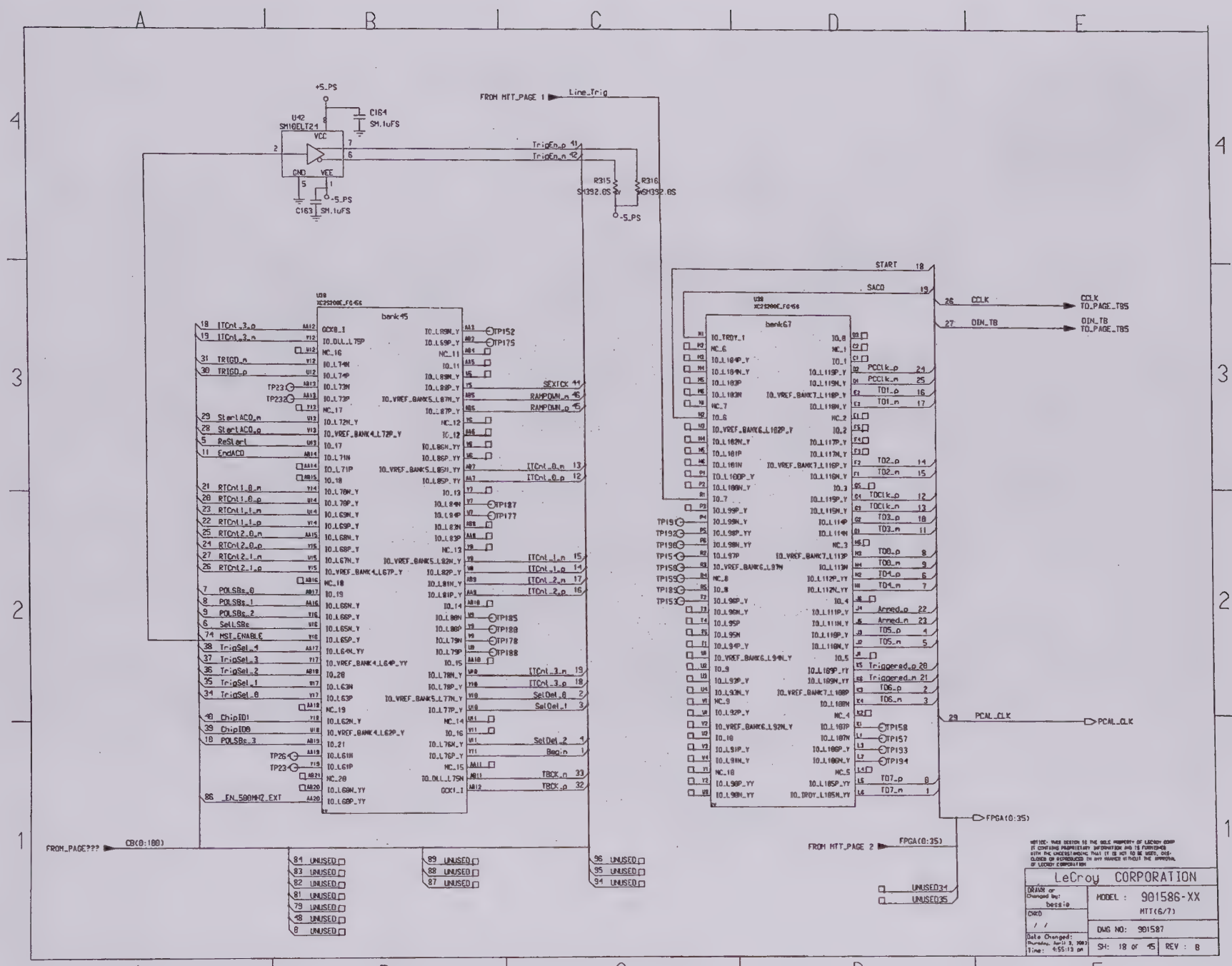
+5_PS
U42
SM10ELT21
VCC
GND
VEE
C164
SM.1uFS
C163
SM.1uFS
-5_PS
FROM MTT_PAGE 1
Line_Trig
TrigEn_p 41
TrigEn_n 42
R315
SM392.0S
R316
SM392.0S
-5_PS
START 18
SACO 19
26 CCLK
CCLK TO_PAGE_TBS
27 DIN_TB
DIN_TB TO_PAGE_TBS
29 PCAL_CLK
PCAL_CLK
FPGA(0:35)
FROM MTT_PAGE 2
FPGA(0:35)
UNUSED34
UNUSED35
FROM_PAGE???
CB(0:188)
bank45
bank67
ITCnt_3_p
ITCnt_3_n
TRIGD_n
TRIGD_p
StartACQ_n
StartACQ_p
ReStart
EndACQ
RTCnt1_0_n
RTCnt1_0_p
RTCnt1_1_n
RTCnt1_1_p
RTCnt2_0_n
RTCnt2_0_p
RTCnt2_1_n
RTCnt2_1_p
POLSBs_0
POLSBs_1
POLSBs_2
SelLSBs
MST_ENABLE
TrigSel_4
TrigSel_3
TrigSel_2
TrigSel_1
TrigSel_0
ChipID1
ChipID0
POLSBs_3
_EN_500MHZ_EXT
SEXTCK
RAMPDWN_n
RAMPDWN_p
ITCnt_0_n
ITCnt_0_p
ITCnt_1_n
ITCnt_1_p
ITCnt_2_n
ITCnt_2_p
ITCnt_3_n
ITCnt_3_p
SelDel_0
SelDel_1
SelDel_2
Begin
TBCK_n
TBCK_p
TP152
TP175
TP127
TP177
TP128
TP178
TP188
TP26
TP23
PCCLk_p
PCCLk_n
TDI_p
TDI_n
TDO_p
TDO_n
TDO2_p
TDO2_n
TDCLk_p
TDCLk_n
TDO3_p
TDO3_n
TDO4_p
TDO4_n
Armed_p
Armed_n
TDS_p
TDS_n
Triggered_p
Triggered_n
TDG_p
TDG_n
TP158
TP157
TP193
TP194
TDT_p
TDT_n
TP15
TP19
TP20
TP21
TP22
TP18
TP17
TP16
84 UNUSED
83 UNUSED
82 UNUSED
81 UNUSED
79 UNUSED
78 UNUSED
8 UNUSED
89 UNUSED
88 UNUSED
87 UNUSED
96 UNUSED
95 UNUSED
94 UNUSED
LeCroy CORPORATION
MODEL : 901586-XX
MTT(6/7)
DWG NO: 901587
SH: 18 OF 45
REV : B
DRAWN BY: bessie
CHKD
Date Changed: Thursday, April 3, 2003
Time: 4:55:13 pm

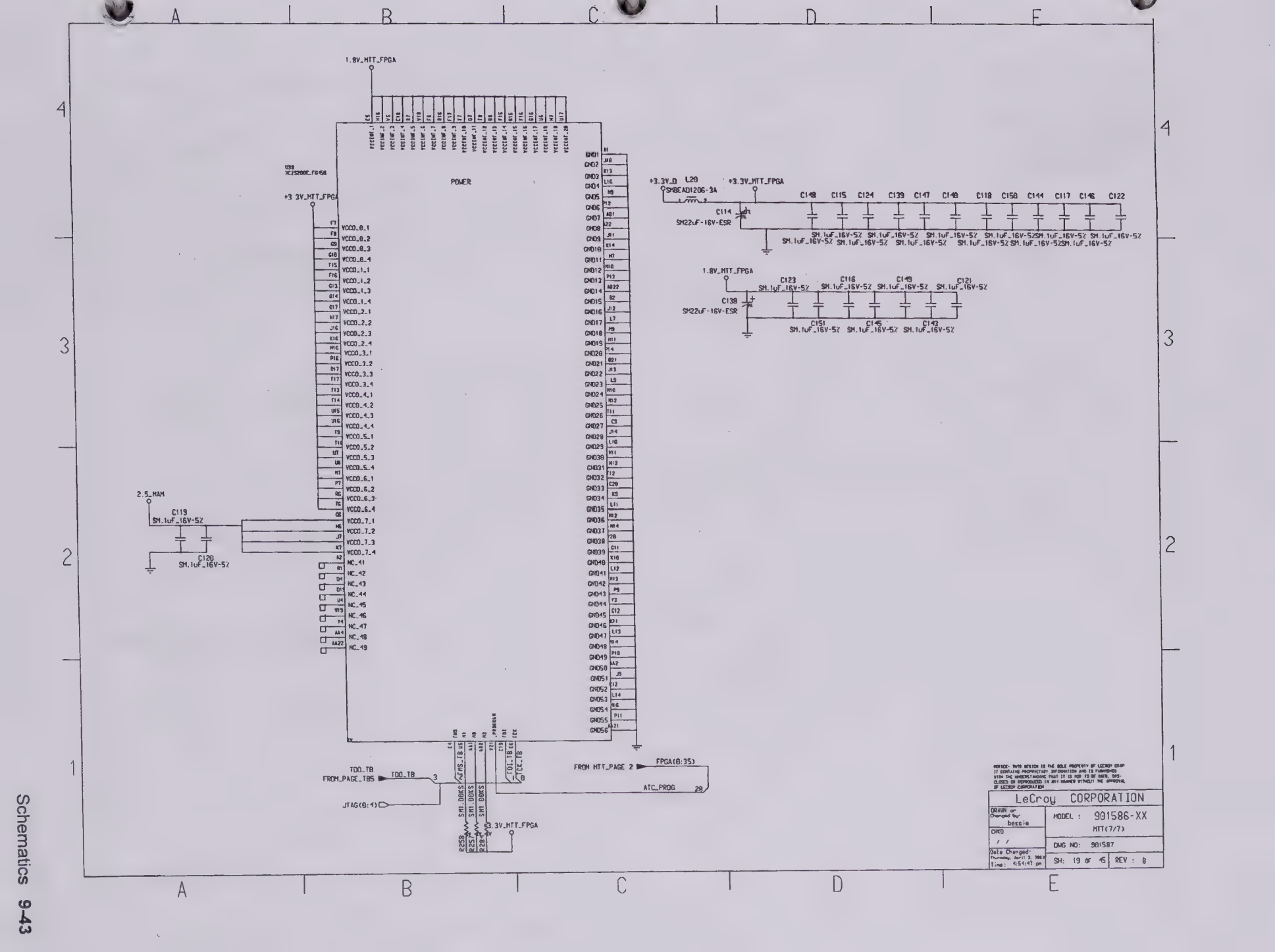
1.8V_MTT_FPGA
POWER
+3.3V_MTT_FPGA
+3.3V_D
L20
SMBEAD1206-3A
C148
C115
C124
C139
C147
C140
C118
C150
C144
C117
C146
C122
C114
SM22uF-16V-ESR
SM.1uF_16V-5Z
C123
C116
C149
C121
C138
C151
C145
C142
2.5_MAM
C119
C129
TDO_TB
FROM_PAGE_TBS
JTAG(0:1)
FROM MTT_PAGE 2
FPGA(0:35)
ATC_PROG
3.3V_MTT_FPGA
LeCroy CORPORATION
MODEL : 901586-XX
MTT(7/7)
DWG NO: 901587
SH: 19 OF 45
REV : B

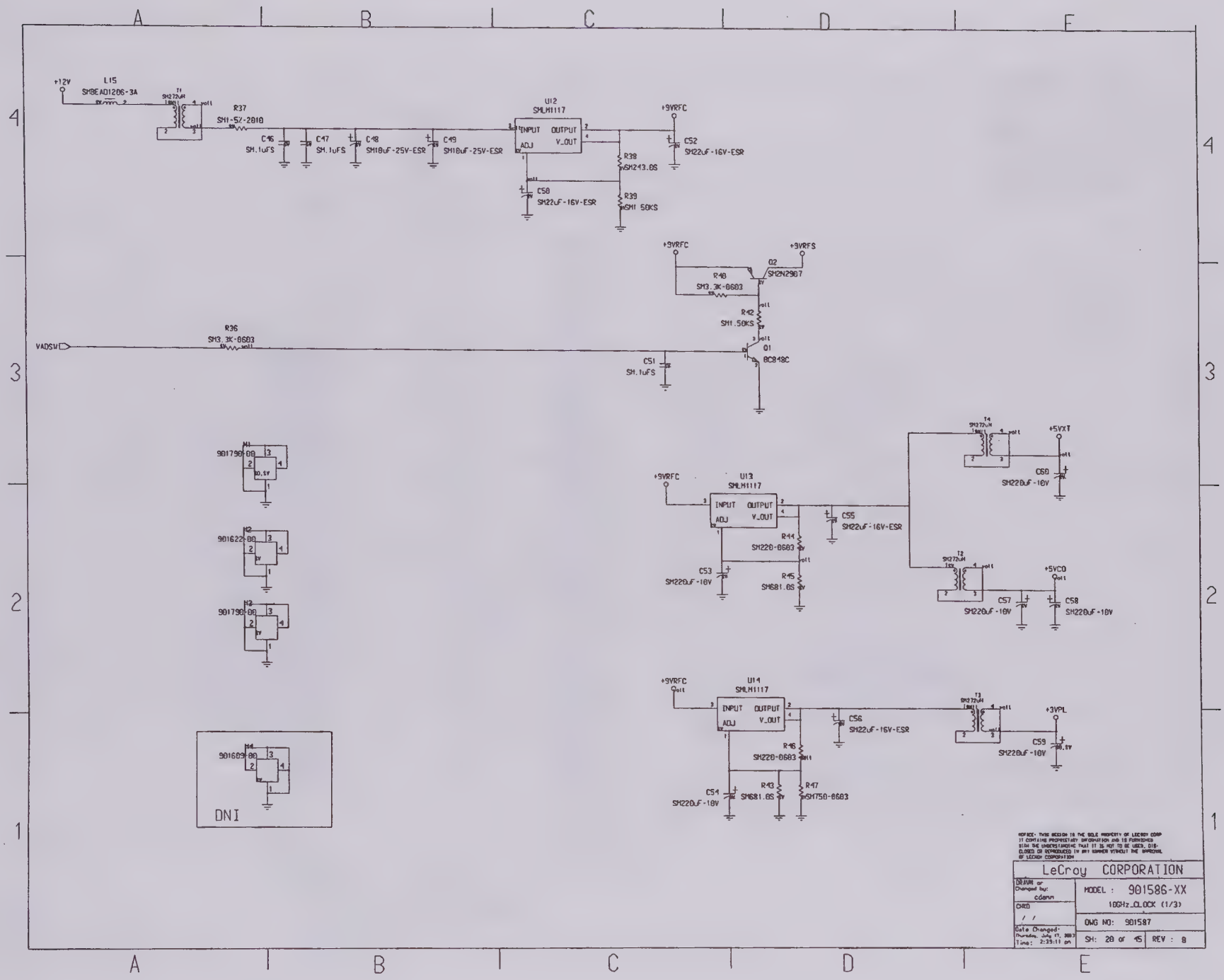
+12V
L15
SMBEAD1206-3A
T1
SM272uH
R37
SM1-5Z-2010
C46
SM.1uFS
C47
SM.1uFS
C48
SM10uF-25V-ESR
C49
SM10uF-25V-ESR
U12
SMLM1117
INPUT
OUTPUT
ADJ
V_OUT
+9VRFC
C52
SM22uF-16V-ESR
R38
SM243.0S
C58
SM22uF-16V-ESR
R39
SM1.50KS
+9VRFC
+9VRFS
Q2
SM2N2907
R40
SM3.3K-0603
R42
SM1.50KS
R36
SM3.3K-0603
VADSW
Q1
BC848C
C51
SM.1uFS
M1
901790-00
M2
901622-00
M2
901790-00
M4
901609-00
DNI
+9VRFC
U13
SMLM1117
T4
SM272uH
+5VXT
C60
SM220uF-10V
C55
SM22uF-16V-ESR
R44
SM220-0603
C53
SM220uF-10V
R45
SM681.0S
T2
SM272uH
+5VCC
C57
SM220uF-10V
C58
SM220uF-10V
+9VRFC
U14
SMLM1117
T3
SM272uH
+3VPL
C56
SM22uF-16V-ESR
R46
SM220-0603
C54
SM220uF-10V
R43
SM681.0S
R47
SM750-0603
C59
SM220uF-10V
NOTICE- THIS DESIGN IS THE SOLE PROPERTY OF LECROY CORP IT CONTAINS PROPRIETARY INFORMATION AND IS FURNISHED SUCH THE UNDERSTANDING THAT IT IS NOT TO BE USED, DISCLOSED OR REPRODUCED IN ANY MANNER WITHOUT THE APPROVAL OF LECROY CORPORATION
LeCroy CORPORATION
DRAWN or Changed by: cdarun
CHKD
Date Changed: Thursday, July 17, 2003 Time: 2:35:11 pm
MODEL : 90158G-XX
10GHz_CLOCK (1/3)
DWG NO: 901587
SH: 20 of 45
REV : B

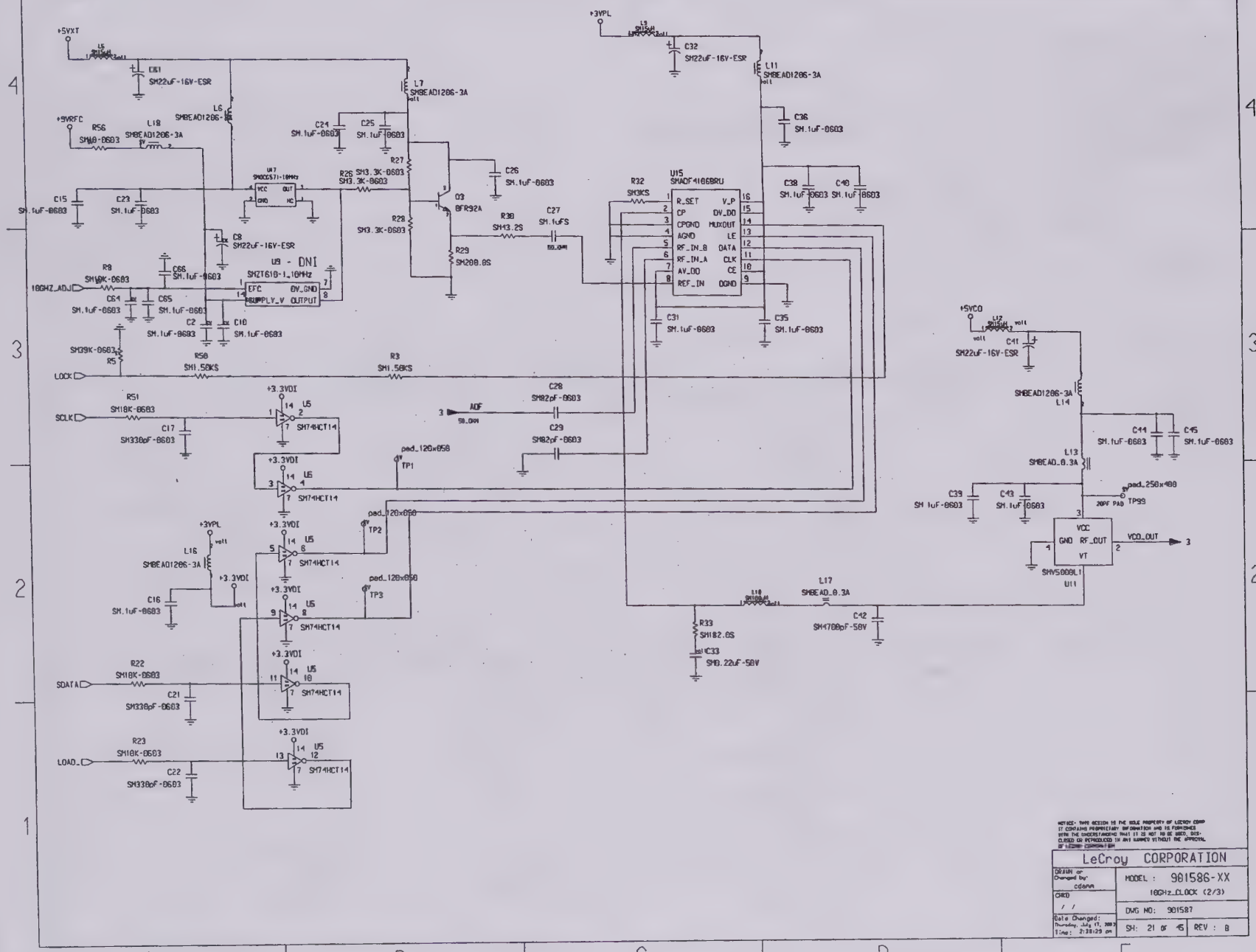
+5VXT
+3VPL
+5VRFC
+5VCO
U9 - DNI
SMZT610-1_10MHz
SMV5009L1
U11
SMADF4106BRU
U15
SM74HCT14
U5
SM4700pF-50V
SM10.22uF-50V
SM22uF-16V-ESR
SMBEAD1206-3A
SMBEAD_0.3A
SM1.5nH
SM1uF-0603
SM330pF-0603
SM82pF-0603
SM1.5K-0603
SM3.3K-0603
SM10K-0603
SM39K-0603
SM200.0S
SM13.2S
SM182.0S
SM1.50KS
SM3KS
SM8-0603
BFR92A
LOCK
SCLK
SDATA
LOAD_
10GHZ_ADJ
ADF
VCO_OUT
TP1
TP2
TP3
TP99
pad_120x050
pad_250x400
20PF PAD
LeCroy CORPORATION
MODEL : 9@1586-XX
10GHz_CLOCK (2/3)
DWG NO: 901587
SH: 21 OF 45
REV : B

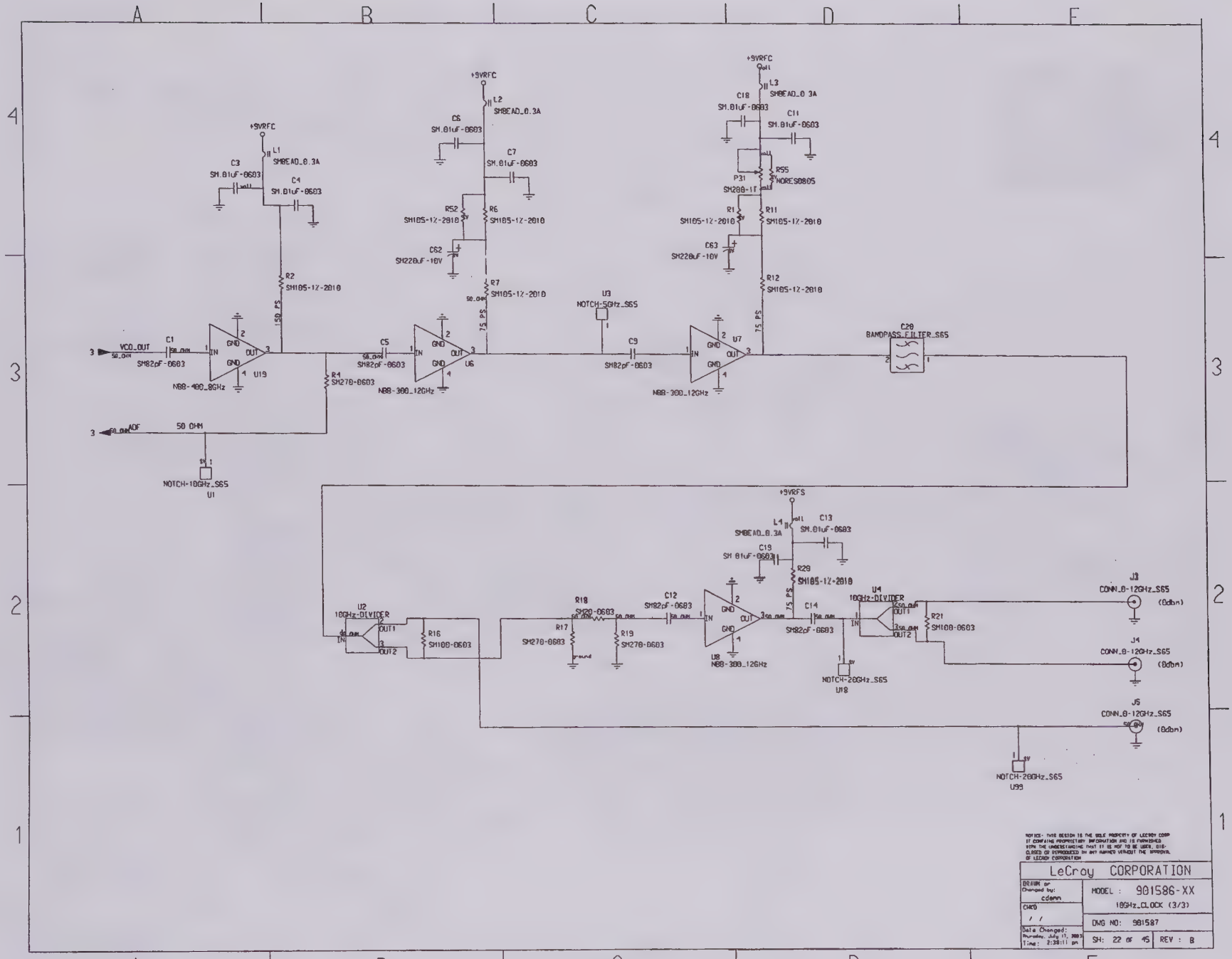
+5VRFC
L1 SMBEAD_0.3A
C3 SM.01uF-0603
C4 SM.01uF-0603
R2 SM105-1%-2010
150 PS
VCO_OUT
50 OHM
C1 SM82pF-0603
U19 NBB-400_8GHz
R4 SM270-0603
ADF
NOTCH-10GHz_S65 U1
L2 SMBEAD_0.3A
C6 SM.01uF-0603
C7 SM.01uF-0603
R52 SM105-1%-2010
R6 SM105-1%-2010
C62 SM220uF-10V
R7 SM105-1%-2010
75 PS
C5 SM82pF-0603
U6 NBB-300_12GHz
U3 NOTCH-5GHz_S65
C9 SM82pF-0603
L3 SMBEAD_0.3A
C18 SM.01uF-0603
C11 SM.01uF-0603
P31 SM200-1T
R55 NORES0805
R1 SM105-1%-2010
R11 SM105-1%-2010
C63 SM220uF-10V
R12 SM105-1%-2010
U7 NBB-300_12GHz
C20 BANDPASS_FILTER_S65
+5VRFS
L4 SMBEAD_0.3A
C13 SM.01uF-0603
C19 SM.01uF-0603
R29 SM105-1%-2010
U2 10GHz-DIVIDER
R16 SM100-0603
R18 SM20-0603
C12 SM82pF-0603
R17 SM270-0603
R19 SM270-0603
U8 NBB-300_12GHz
C14 SM82pF-0603
U4 10GHz-DIVIDER
R21 SM100-0603
NOTCH-20GHz_S65 U18
J3 CONN_0-12GHz_S65 (0dbm)
J4 CONN_0-12GHz_S65 (0dbm)
J5 CONN_0-12GHz_S65 (0dbm)
NOTCH-20GHz_S65 U99
NOTICE- THIS DESIGN IS THE SOLE PROPERTY OF LECROY CORP IF CONTAINS PROPRIETARY INFORMATION AND IS FURNISHED WITH THE UNDERSTANDING THAT IT IS NOT TO BE USED, DISCLOSED OR REPRODUCED IN ANY MANNER WITHOUT THE APPROVAL OF LECROY CORPORATION
LeCroy CORPORATION
DRAWN or Changed by: cdemm
CHKD / /
Date Changed: Thursday, July 17, 2003 Time: 2:38:11 pm
MODEL : 901586-XX
10GHz_CLOCK (3/3)
DWG NO: 901587
SH: 22 OF 45
REV : B

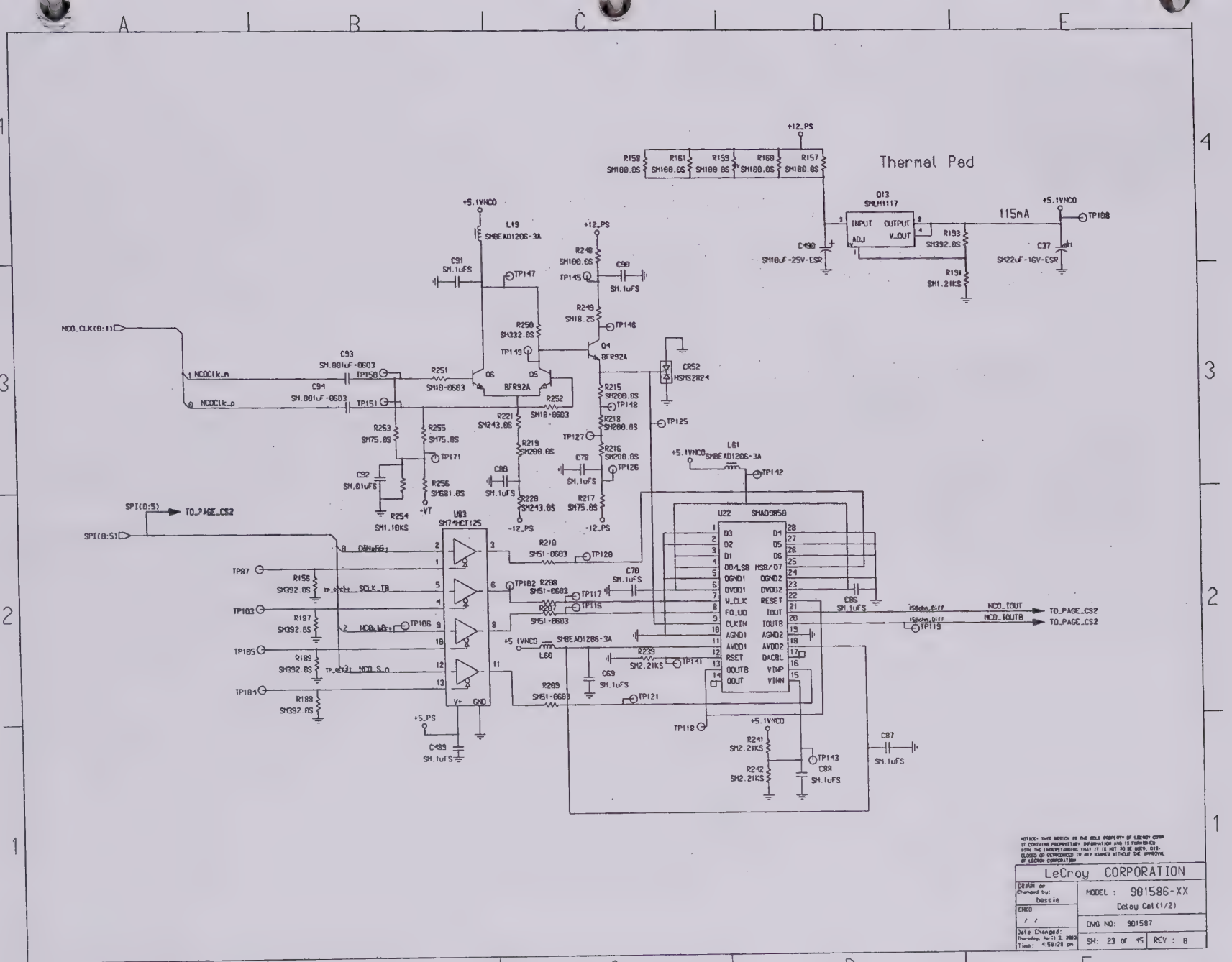
Thermal Pad
+12_PS
+5.1VNCO
+5_PS
-12_PS
115mA
NCO_CLK(0:1)
SPI(0:5)
TO_PAGE_CS2
NCO_IOUT
NCO_IOUTB
U22 SHAD9858
U83 SN74HCT125
Q13 SMLM1117
Q4 BFR92A
L19 SMBEAD1206-3A
L61 SMBEAD1206-3A
L60 SMBEAD1206-3A
CR52 HSMS2824
LeCroy CORPORATION
MODEL : 901586-XX
Delay Cal(1/2)
DWG NO: 901587
SH: 23 of 45
REV : B
DRAWN or Changed by: bessie
CHKD
Date Changed: Thursday, April 3, 2003
Time: 4:58:28 pm

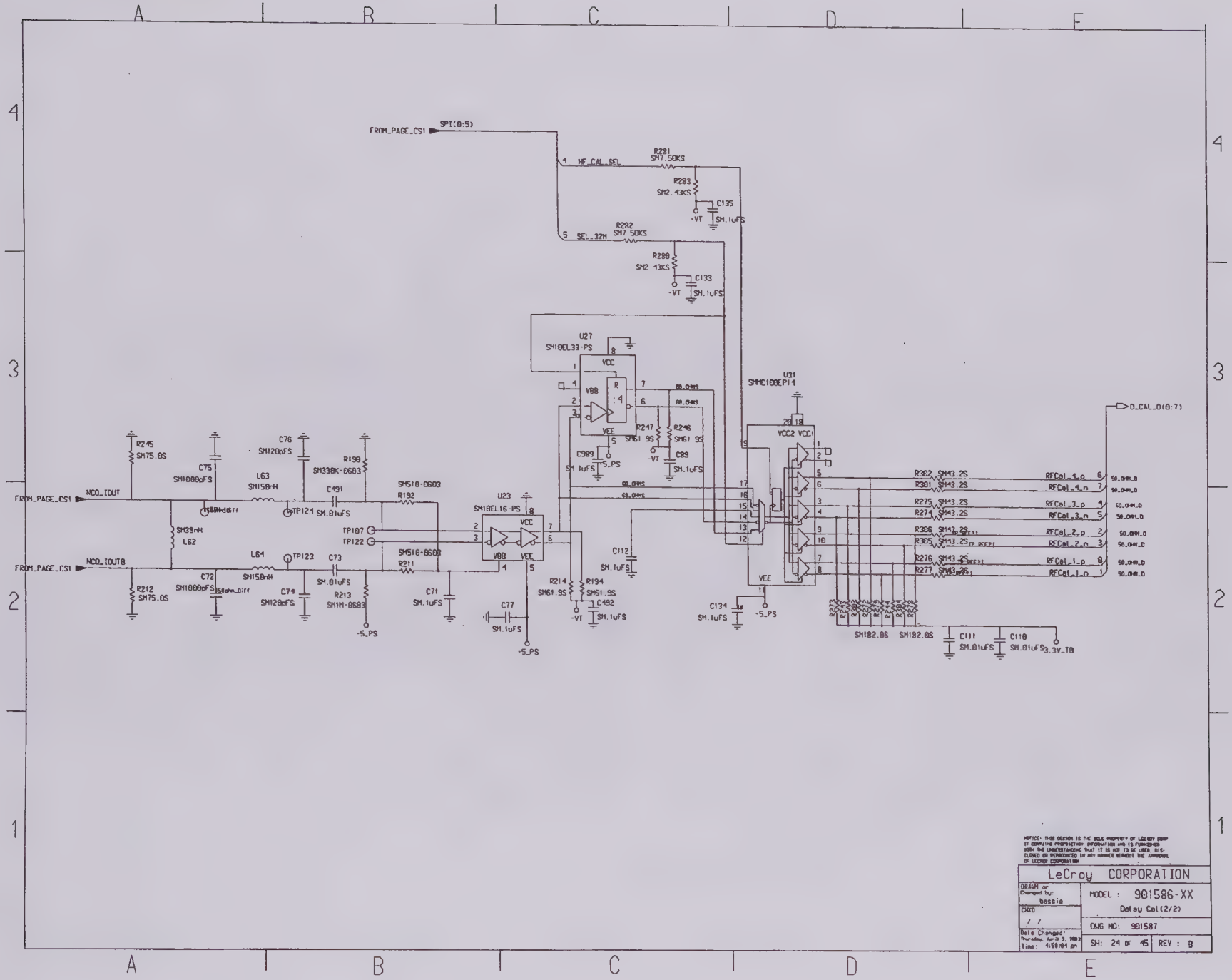

NOTICE: THIS DESIGN IS THE SOLE PROPERTY OF LECROY CORP IT CONTAINS PROPRIETARY INFORMATION AND IS FURNISHED WITH THE UNDERSTANDING THAT IT IS NOT TO BE USED, DISCLOSED OR REPRODUCED IN ANY MANNER WITHOUT THE APPROVAL OF LECROY CORPORATION

LeCroy CORPORATION

DRAWN or Changed by: bessie	MODEL : 901586-XX
CHKD / /	Delay Cal(2/2)
Date Changed: Thursday, Apr-1 3, 2004 Time: 4:58:04 pm	DWG NO: 901587
	SH: 24 OF 45 REV : B

CAL_SEL1	CAL_SEL2	FUNCTION
0	0	CLOCKED & LEVEL
1	0	LEVEL ONLY
X	1	OFF

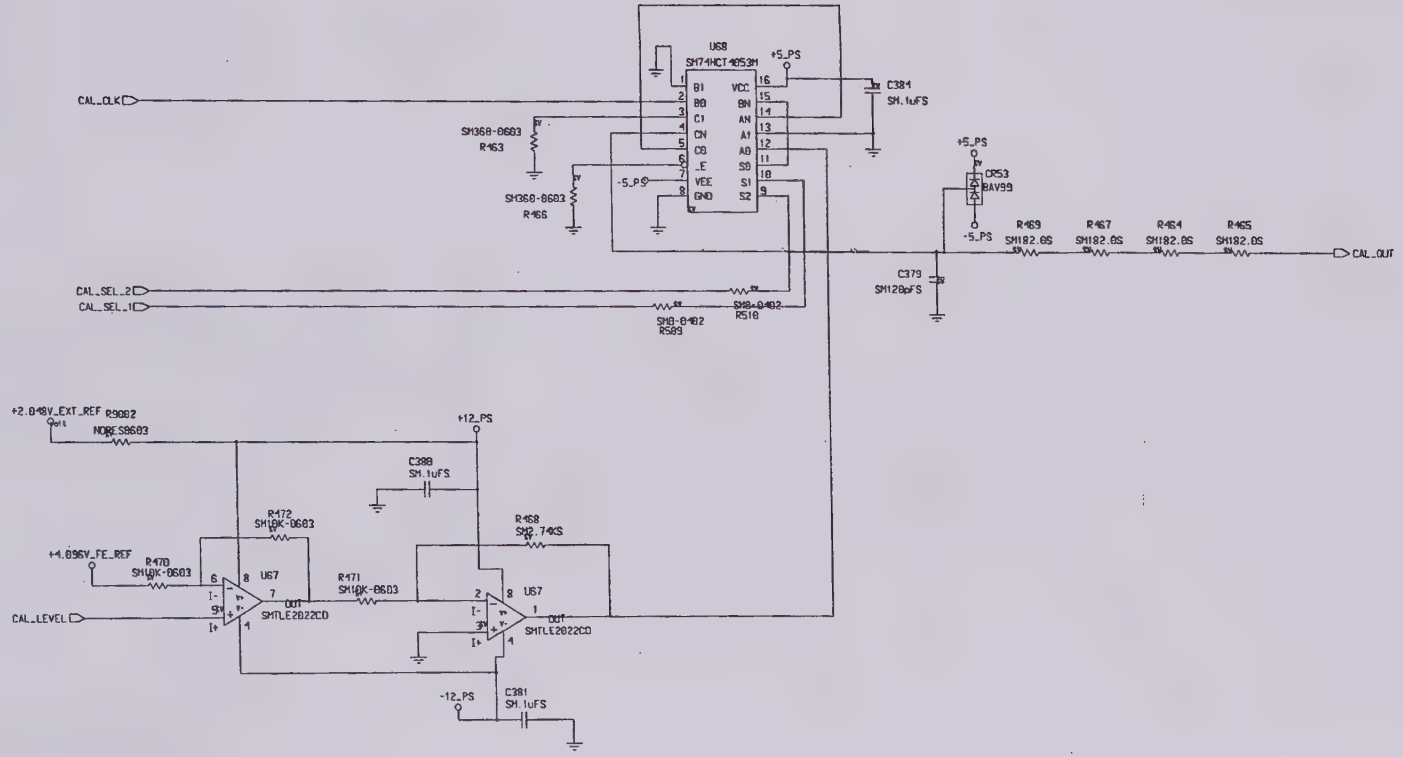

NOTICE: THIS DESIGN IS THE SOLE PROPERTY OF LECROY CORP
IT CONTAINS PROPRIETARY INFORMATION AND IS FURNISHED
WITH THE UNDERSTANDING THAT IT IS NOT TO BE USED, DIS-
CLOSED OR REPRODUCED IN ANY MANNER WITHOUT THE APPROVAL
OF LECROY CORPORATION.

LeCroy CORPORATION		
DRAWN or Changed by: bessie	MODEL : 901586-XX CAL_OUT(1/1)	
CHKD / /	DWG NO: 901587	
Date Changed: Thursday, April 3, 2003 Time: 4:59:03 pm	SH: 25 OF 45	REV : B

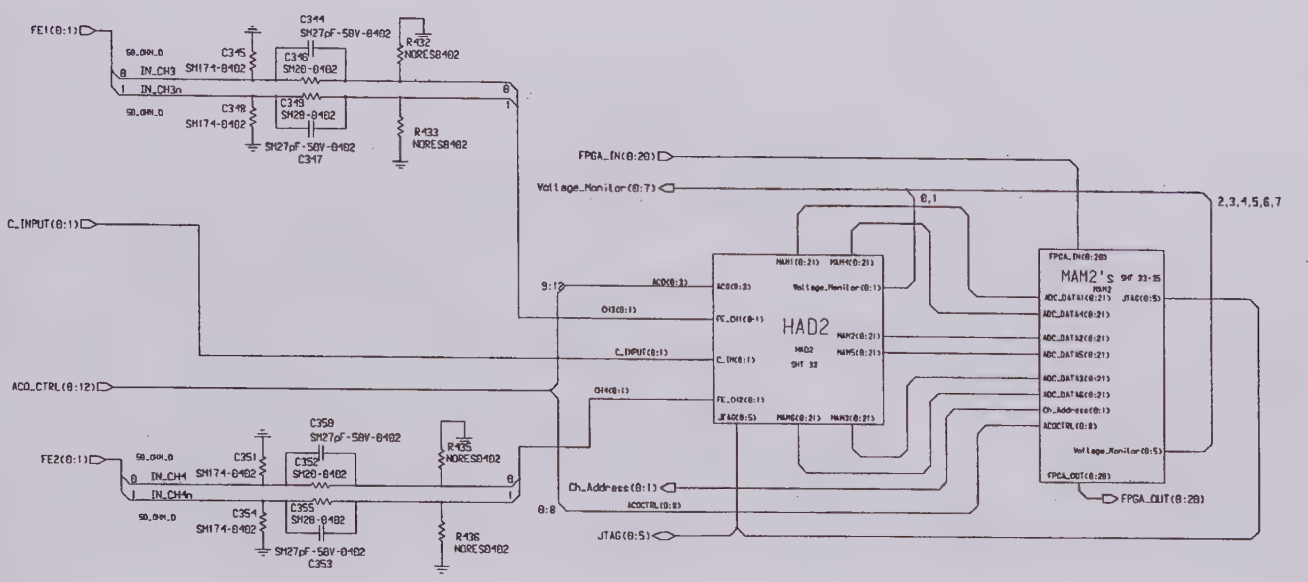

NOTICE: THIS DESIGN IS THE SOLE PROPERTY OF LECROY CORP
IT CONTAINS PROPRIETARY INFORMATION AND IS FURNISHED
WITH THE UNDERSTANDING THAT IT IS NOT TO BE USED, DIS-
CLOSED OR REPRODUCED IN ANY MANNER WITHOUT THE APPROVAL
OF LECROY CORPORATION

LeCroy CORPORATION

DRAWN or Changed by: bessie	MODEL : 901586-XX AM(1/1)
CHKD / /	DWG NO: 901587
Date Changed: Thursday, April 3, 2003 Time: 5:06:23 pm	SH: 26 of 45 REV : B

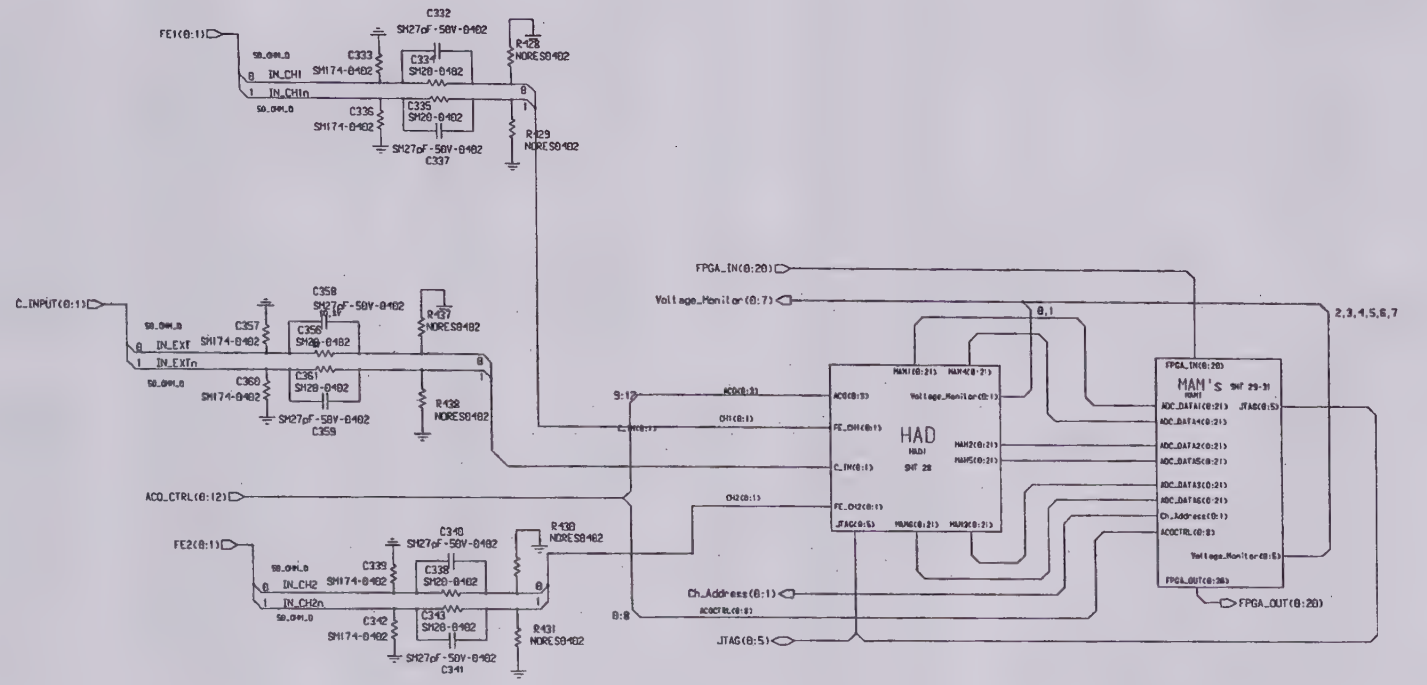

NOTICE- THIS DESIGN IS THE SOLE PROPERTY OF LECROY CORP
IT CONTAINS PROPRIETARY INFORMATION AND IS FURNISHED
WITH THE UNDERSTANDING THAT IT IS NOT TO BE USED, DIS-
CLOSED OR REPRODUCED IN ANY MANNER WITHOUT THE APPROVAL
OF LECROY CORPORATION

LeCroy CORPORATION

DRAWN or Changed by: bessie	MODEL : 901586-XX AM(1/1)
CHKD / /	DWG NO: 901587
Date Changed: Thursday April 3, 2003 Time: 5:02:22 pm	SH: 27 OF 45 REV : B

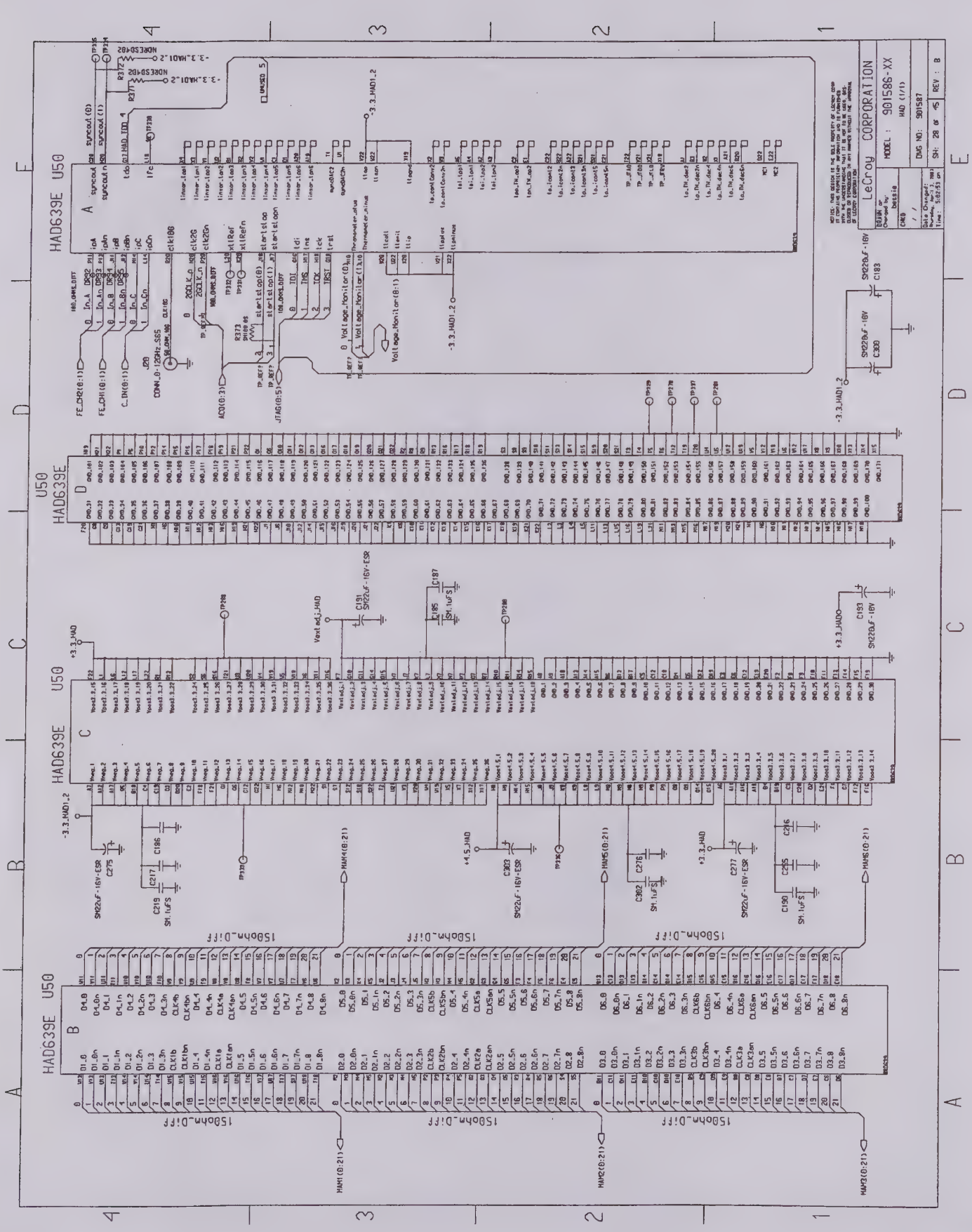
LeCroy CORPORATION
MODEL : 901586-XX
HAD (1/1)
DWG NO: 901587
SH: 28 OF 45
REV : B
HAD639E U50
HAD639E U50
HAD639E U50
HAD639E U50
150ohm_Diff

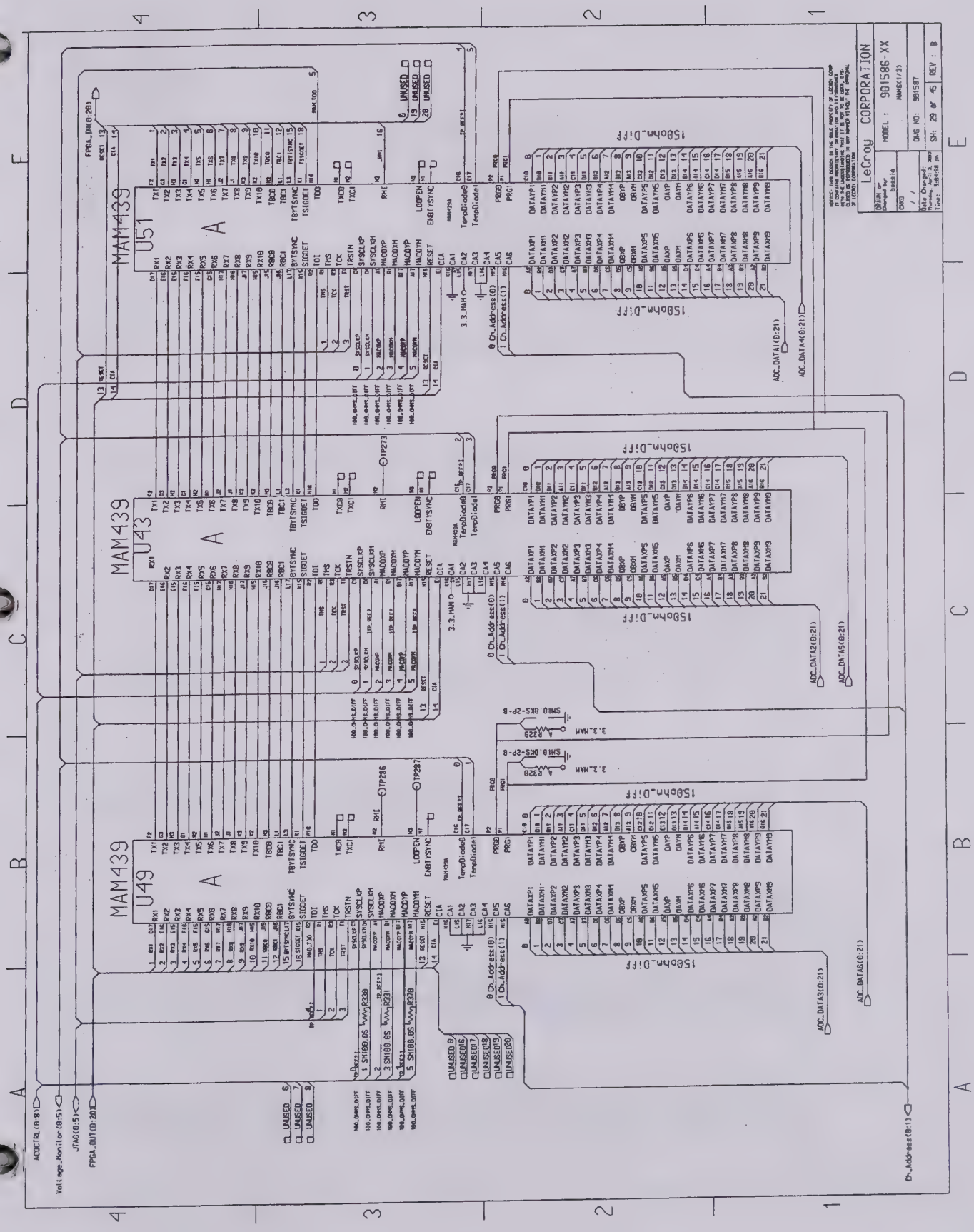
LeCroy CORPORATION
MODEL : 901586-XX
MAMS(1/3)
DWG NO: 901587
SH: 29 of 45
REV : B
MAM439
U51
U43
U49
150ohm_Diff
ADC_DATA1(0:21)
ADC_DATA4(0:21)
ADC_DATA2(0:21)
ADC_DATA5(0:21)
ADC_DATA3(0:21)
ADC_DATA6(0:21)
Ch_Address(0:1)
Ch_Address(0)
Ch_Address(1)
FPGA_IN(0:20)
FPGA_OUT(0:20)
Voltage_Monitor(0:5)
JTAG(0:5)
ACQCTRL(0:8)
UNUSED

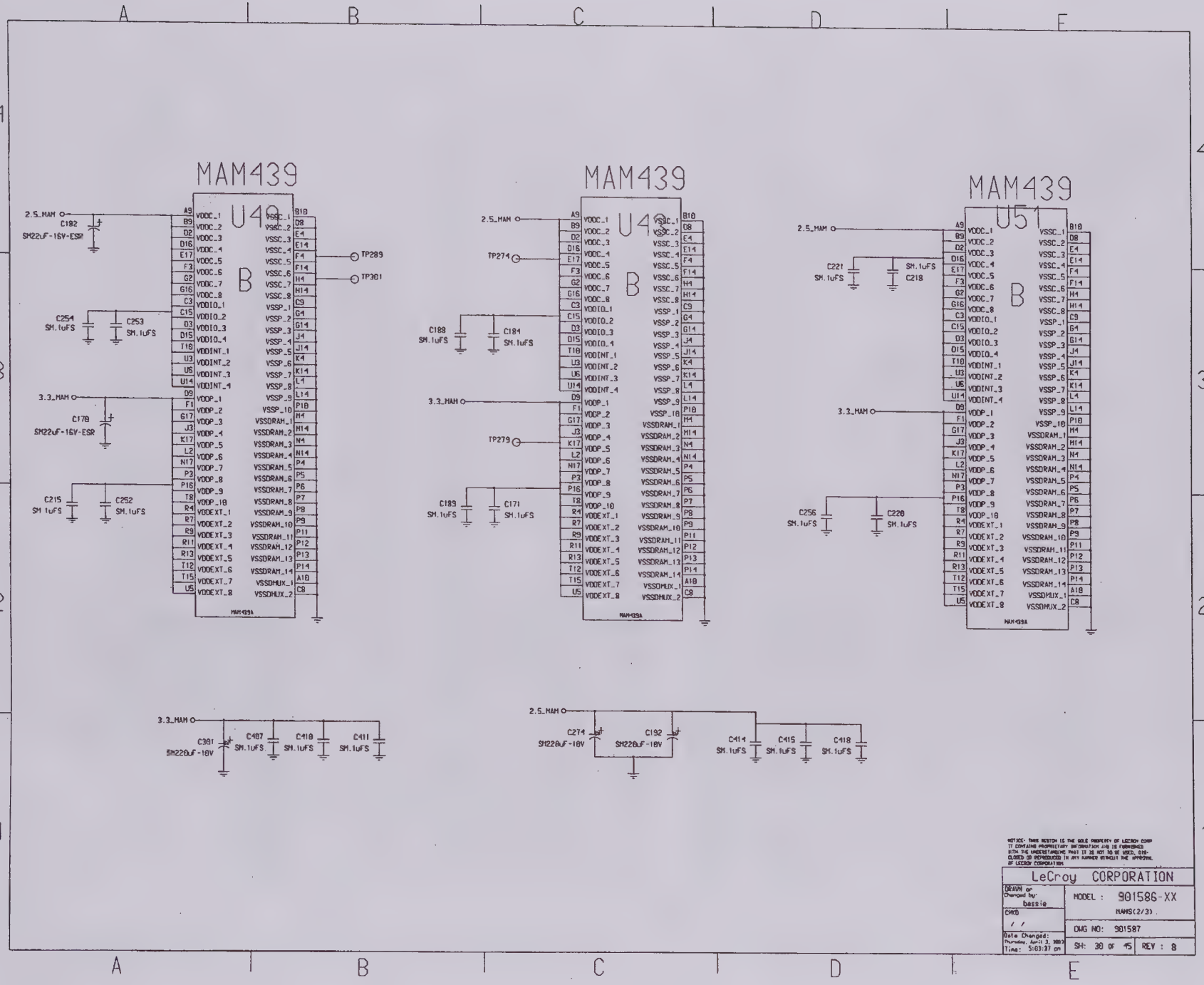

NOTICE - THIS MATERIAL IS THE SOLE PROPERTY OF LECROY CORP
IT CONTAINS PROPRIETARY INFORMATION AND IS FURNISHED
WITH THE UNDERSTANDING THAT IT IS NOT TO BE USED, DISCLOSED OR REPRODUCED IN ANY MANNER WITHOUT THE APPROVAL
OF LECROY CORPORATION

LeCroy CORPORATION	
DRAWN or Changed by: bassie	MODEL : 901586-XX MAMS(2/3)
CHKD / /	DWG NO: 901587
Date Changed: Thursday, April 3, 1997 Time: 5:03:37 pm	SH: 30 OF 45 REV : B

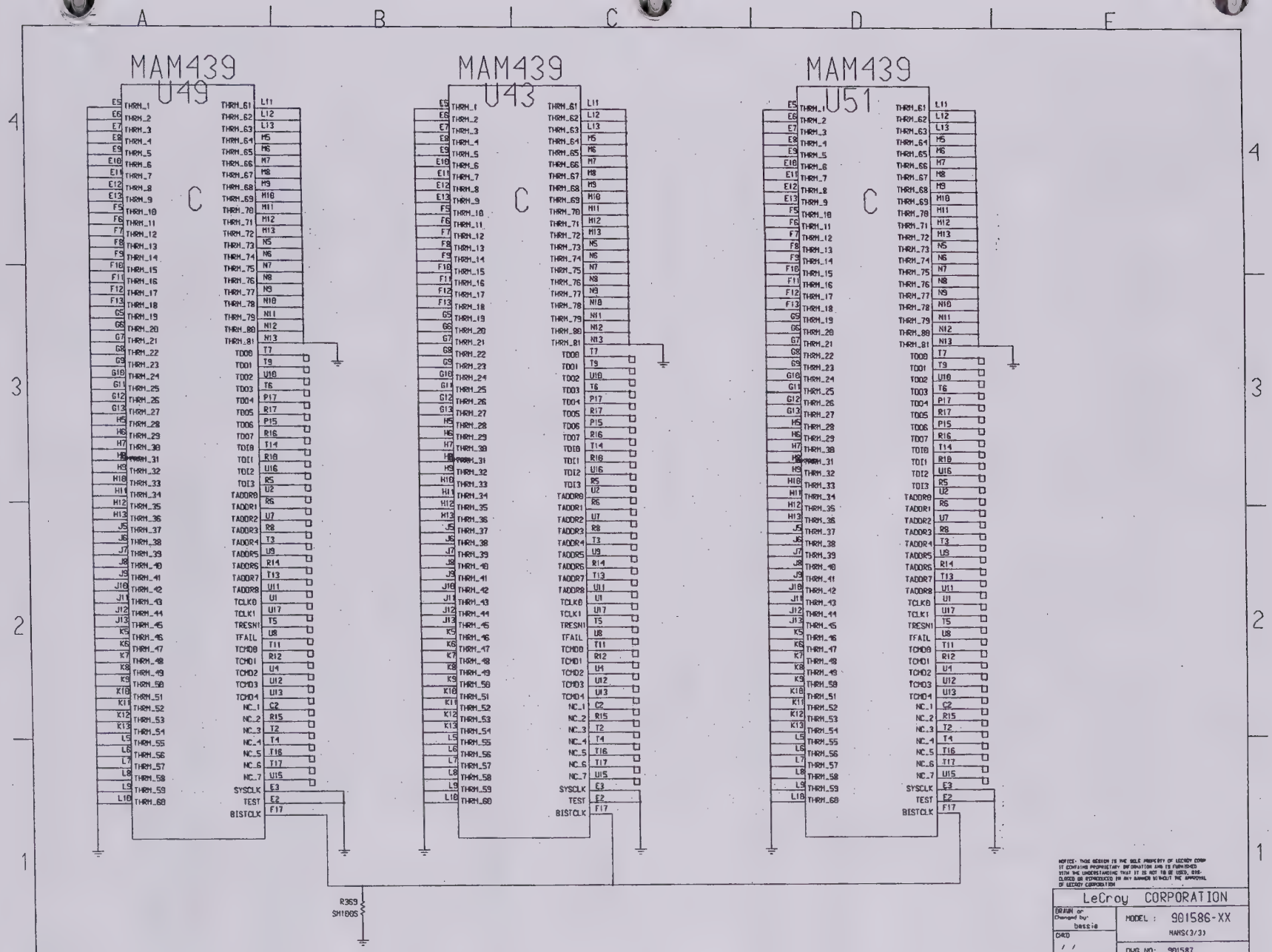

NOTICE: THIS DESIGN IS THE SOLE PROPERTY OF LECROY CORP IT CONTAINS PROPRIETARY INFORMATION AND IS FURNISHED WITH THE UNDERSTANDING THAT IT IS NOT TO BE USED, DISCLOSED OR REPRODUCED IN ANY MANNER WITHOUT THE APPROVAL OF LECROY CORPORATION

LeCroy CORPORATION	
DRAWN or Changed by: bessie	MODEL : 901586-XX MAMS(3/3)
CHKD / /	DWG NO: 901587
Date Changed: Thursday, April 7, 2005 Time: 5:03:16 pm	SH: 31 OF 45 REV : B

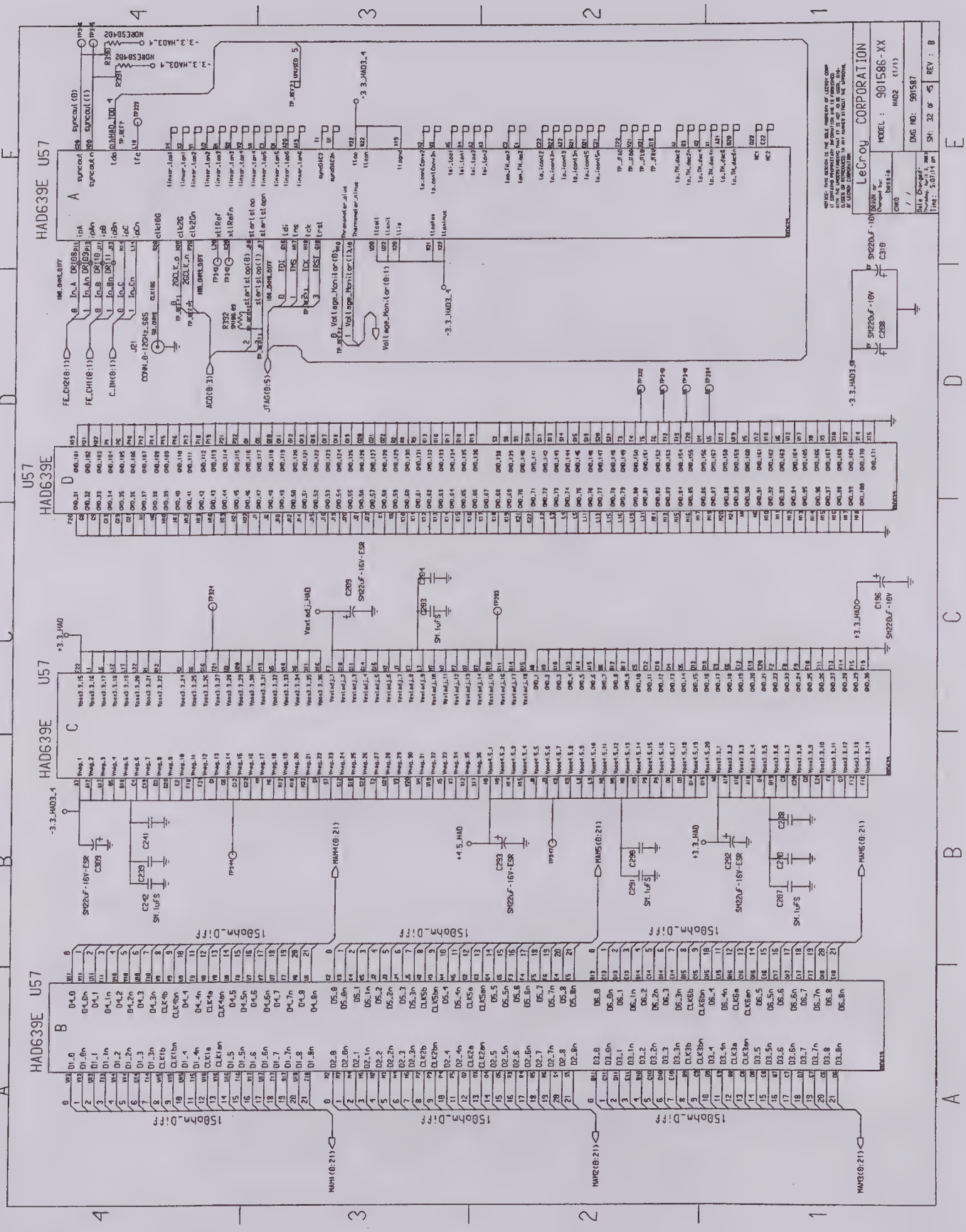
HAD639E U57
LeCroy CORPORATION
MODEL : 901586-XX
HAD2 (1/1)
DWG NO: 901587
SH: 32 OF 45
REV : B

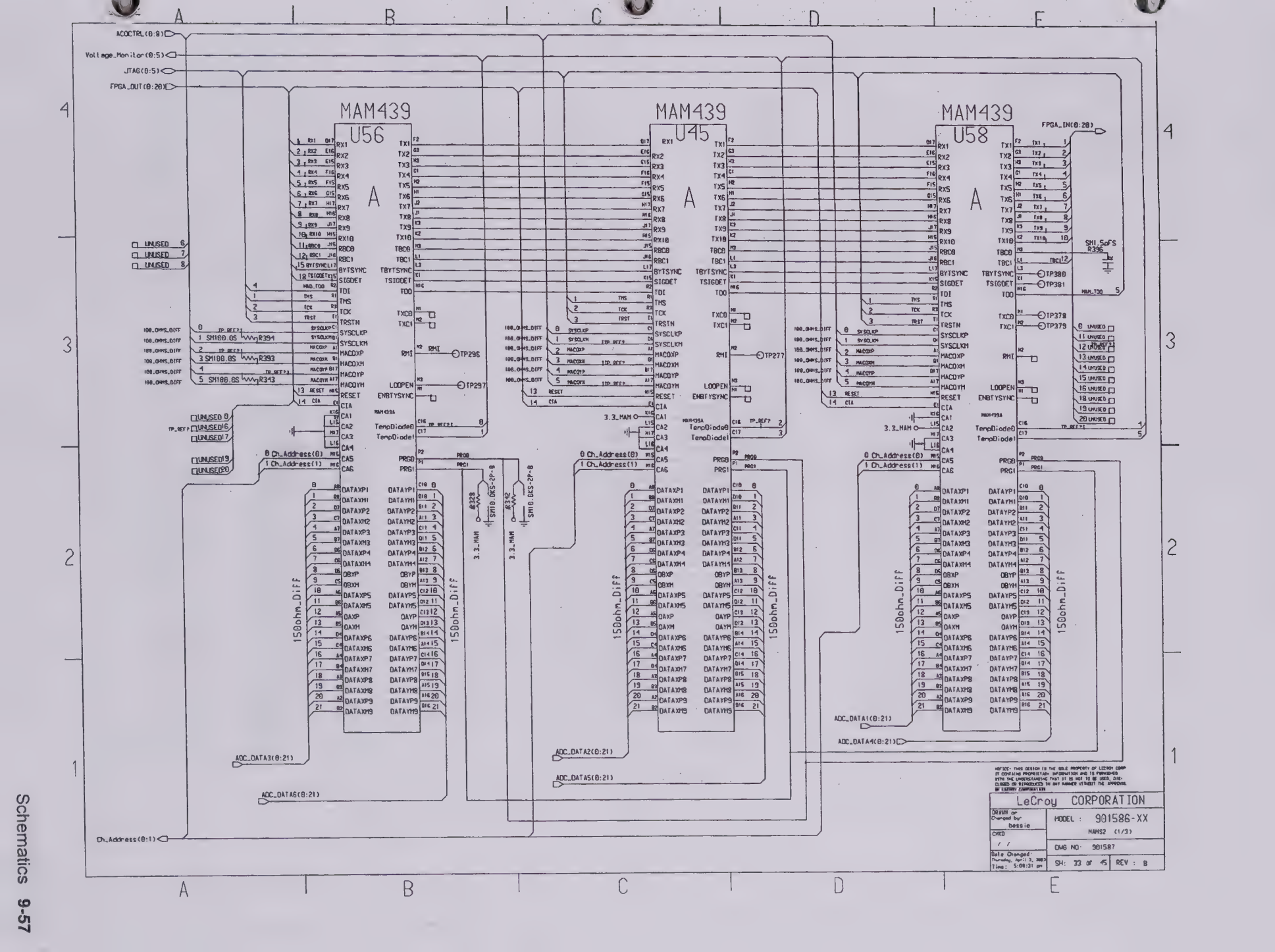
ACQCTRL(0:8)
Voltage_Monitor(0:5)
JTAG(0:5)
FPGA_OUT(0:20)
MAM439
U56
U45
U58
FPGA_IN(0:20)
ADC_DATA1(0:21)
ADC_DATA2(0:21)
ADC_DATA3(0:21)
ADC_DATA4(0:21)
ADC_DATA5(0:21)
ADC_DATA6(0:21)
Ch_Address(0:1)
150ohm_Diff
LeCroy CORPORATION
MODEL : 901586-XX
NAMS2 (1/3)
DWG NO: 901587
SH: 33 of 45
REV : B

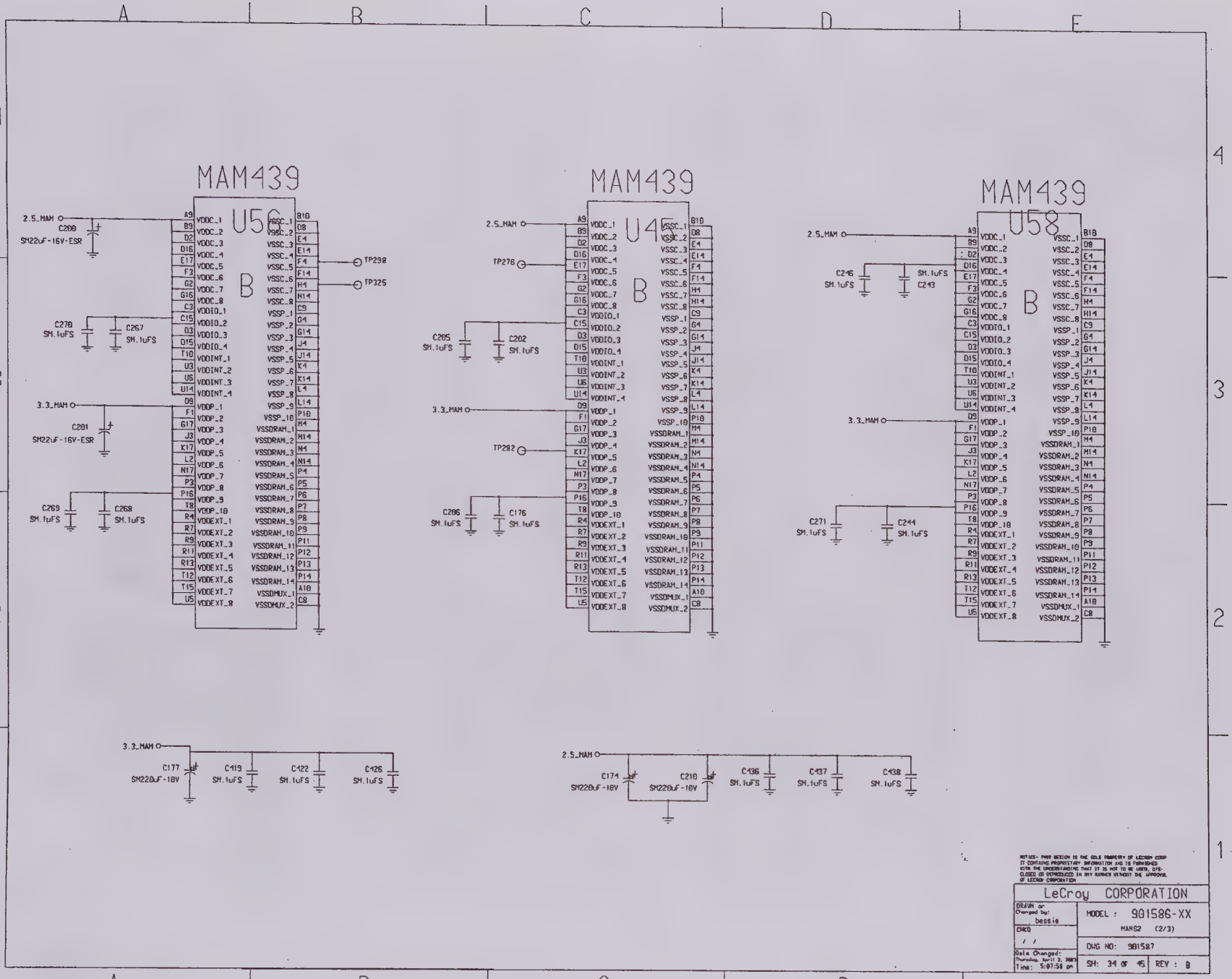
MAM439
U56
B
2.5_MAM
C200
SM22uF-16V-ESR
C270
SM.1uFS
C267
SM.1uFS
3.3_MAM
C201
SM22uF-16V-ESR
C269
SM.1uFS
C268
SM.1uFS
TP298
TP325
MAM439
U45
B
2.5_MAM
TP276
C205
SM.1uFS
C202
SM.1uFS
3.3_MAM
TP282
C206
SM.1uFS
C176
SM.1uFS
MAM439
U58
B
2.5_MAM
C245
SM.1uFS
C243
3.3_MAM
C271
SM.1uFS
C244
SM.1uFS
3.3_MAM
C177
SM220uF-10V
C419
SM.1uFS
C422
SM.1uFS
C426
SM.1uFS
2.5_MAM
C174
SM220uF-10V
C210
SM220uF-10V
C436
SM.1uFS
C437
SM.1uFS
C438
SM.1uFS
NOTICE: THIS DESIGN IS THE SOLE PROPERTY OF LECROY CORP
IT CONTAINS PROPRIETARY INFORMATION AND IS FURNISHED
WITH THE UNDERSTANDING THAT IT IS NOT TO BE USED, DIS-
CLOSED OR REPRODUCED IN ANY MANNER WITHOUT THE APPROVAL
OF LECROY CORPORATION
LeCroy CORPORATION
DRAWN or Changed by: bessie
CHKD
Date Changed: Thursday, April 3, 1997
Time: 5:07:58 pm
MODEL : 901586-XX
MAMS2 (2/3)
DWG NO: 901587
SH: 34 OF 45
REV : B

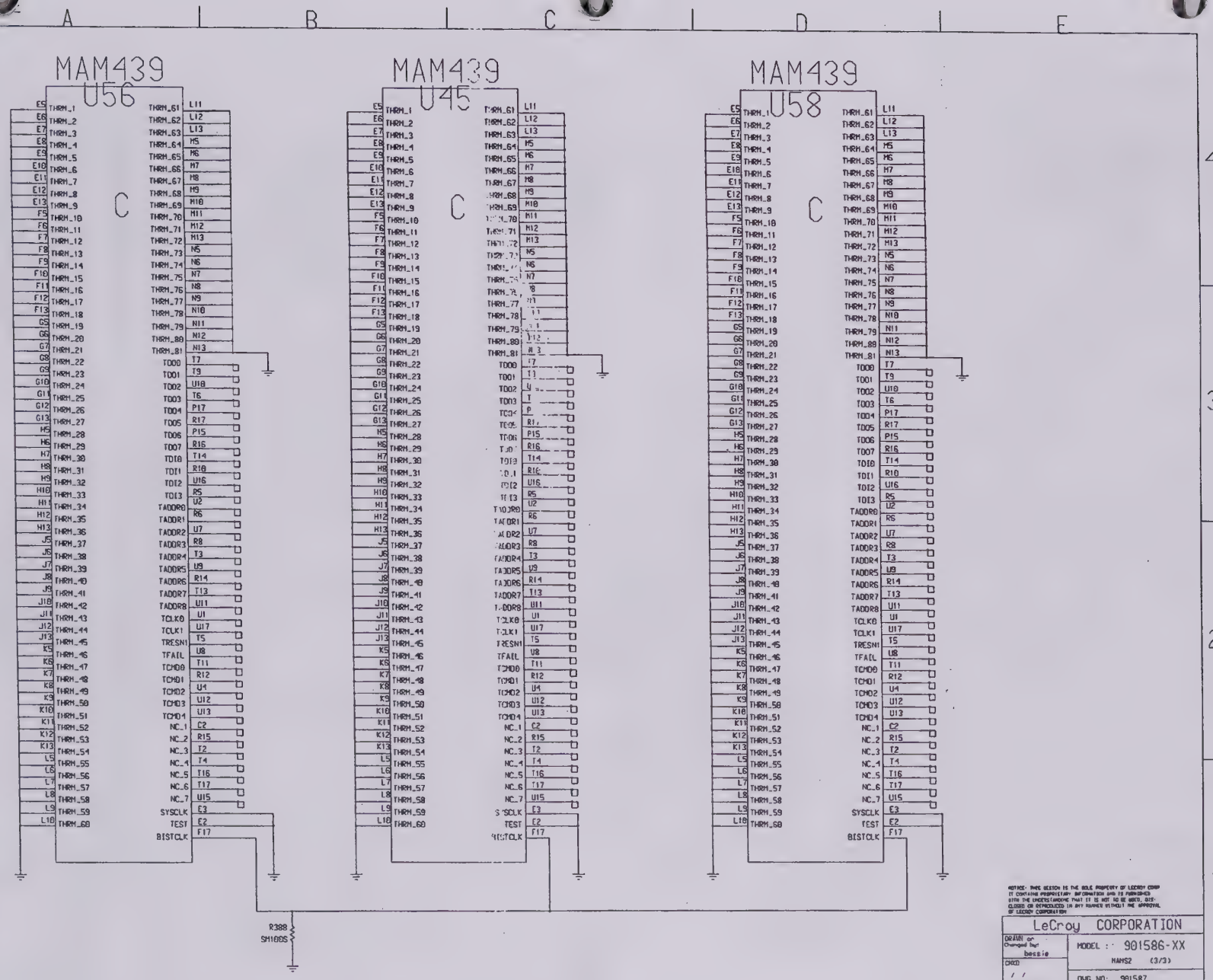

NOTICE: THIS DESIGN IS THE SOLE PROPERTY OF LECROY CORP
IT CONTAINS PROPRIETARY INFORMATION AND IS FURNISHED
WITH THE UNDERSTANDING THAT IT IS NOT TO BE USED, DISCLOSED OR REPRODUCED IN ANY MANNER WITHOUT THE APPROVAL
OF LECROY CORPORATION

LeCroy CORPORATION

DRAWN or Changed by: bessie	MODEL : 901586-XX MAM32 (3/3)
CHKD / /	DWG NO: 901587
Date Changed: Thursday, April 3, 2003 Time: 5:07:36 pm	SH: 35 OF 45 REV : B

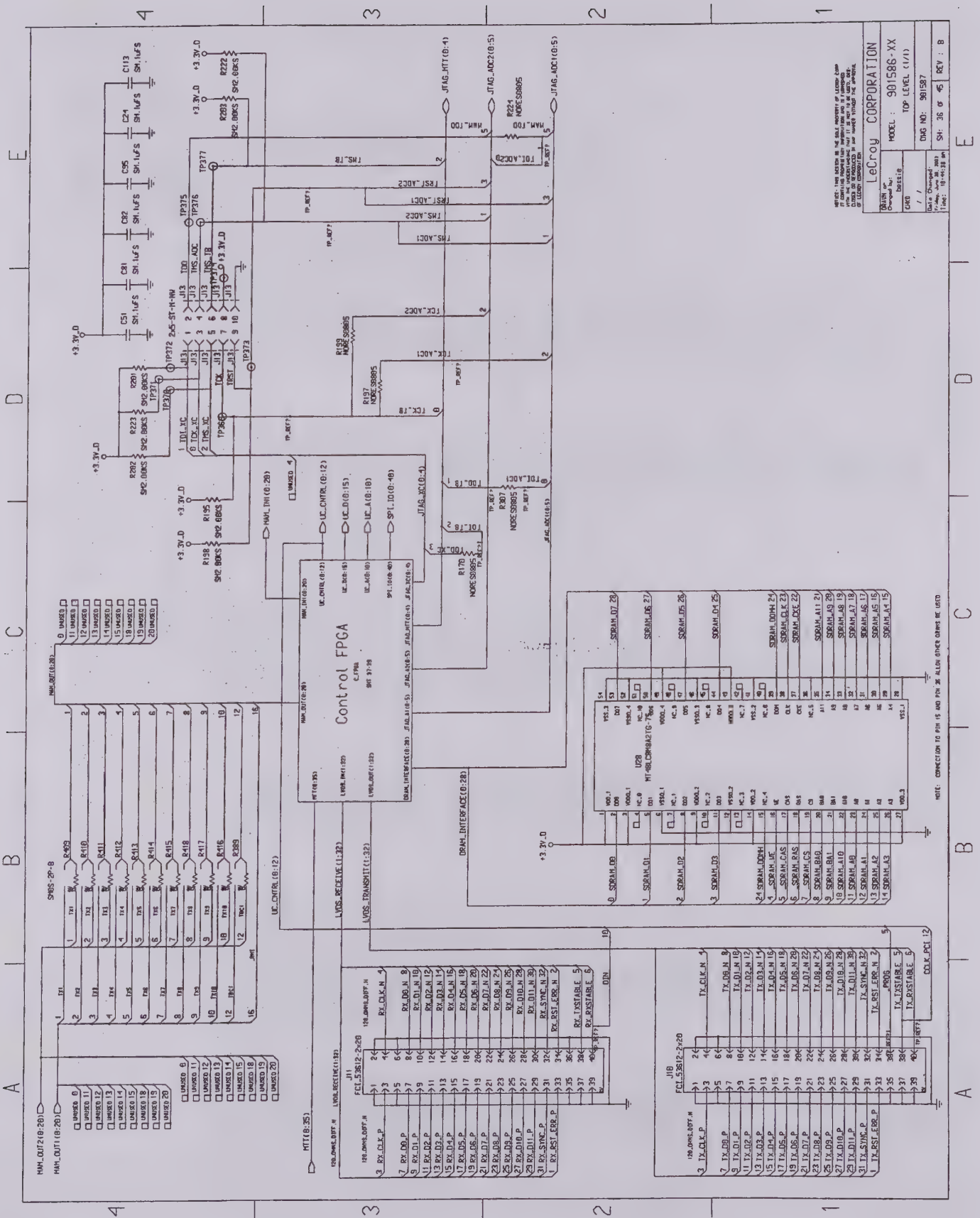
LeCroy CORPORATION
MODEL : 901586-XX
TOP LEVEL (1/1)
DWG NO: 901587
SH: 36 OF 45
REV : B
Control FPGA
U28
MT48LC8M8A2TG-75
J11
FCI_53612-2x20
J10
FCI_53612-2x20
SMBS-2P-8
2x5-ST-H-HW
NOTE: CONNECTION TO PIN 15 AND PIN 36 ALLOW OTHER GRAMS BE USED

LeCroy CORPORATION
MODEL : 901586-XX
CF(1/3)
DWG NO: 901587
SH: 37 OF 45
REV : B

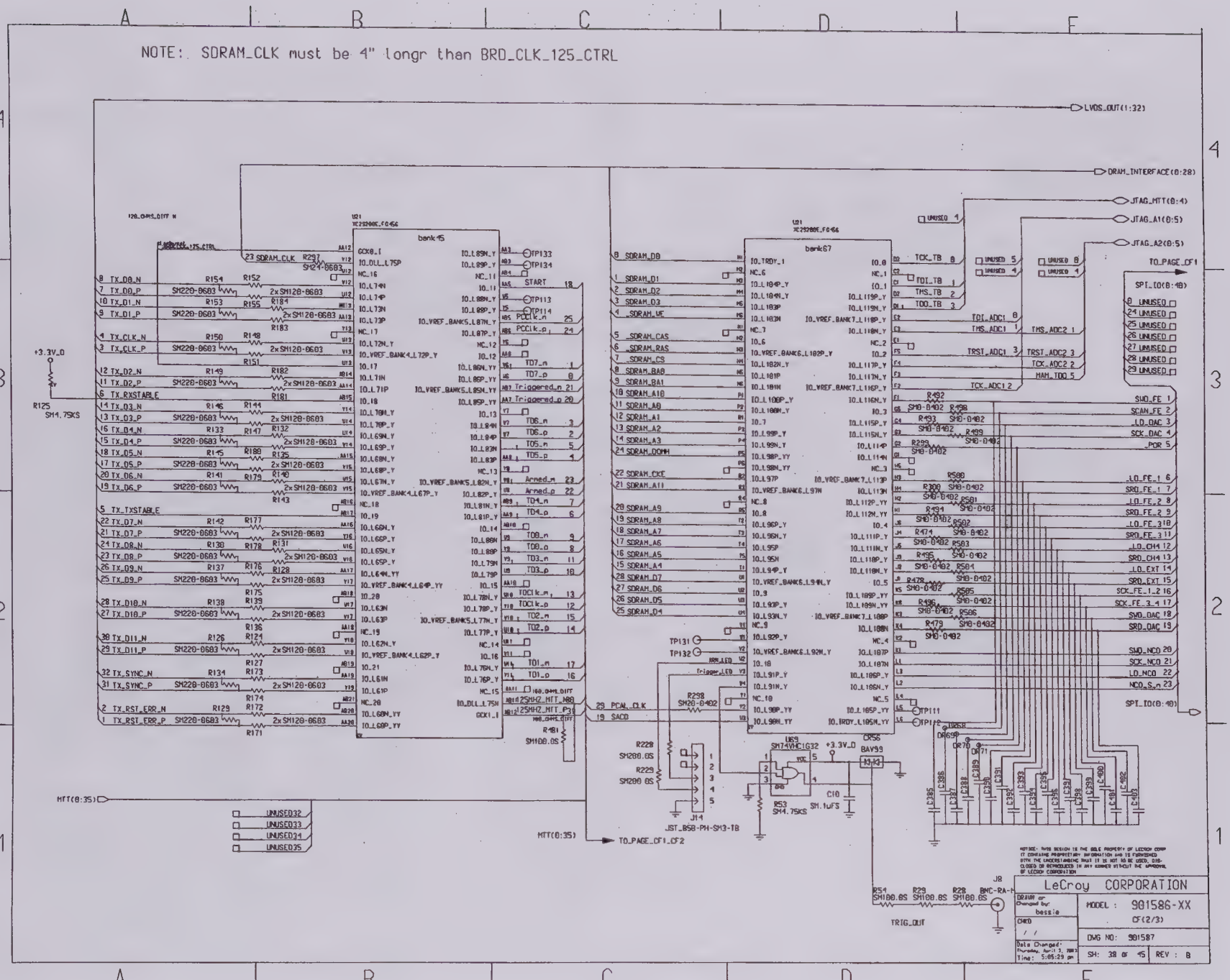
NOTE: SDRAM_CLK must be 4" longr than BRD_CLK_125_CTRL
LVDS_OUT(1:32)
DRAM_INTERFACE(0:28)
JTAG_MTT(0:4)
JTAG_A1(0:5)
JTAG_A2(0:5)
TO_PAGE_CF1
SPI_IO(0:48)
MTT(0:35)
TO_PAGE_CF1_CF2
TRIG_OUT
LeCroy CORPORATION
MODEL : 901586-XX
CF(2/3)
DWG NO: 901587
SH: 38 OF 45
REV : B

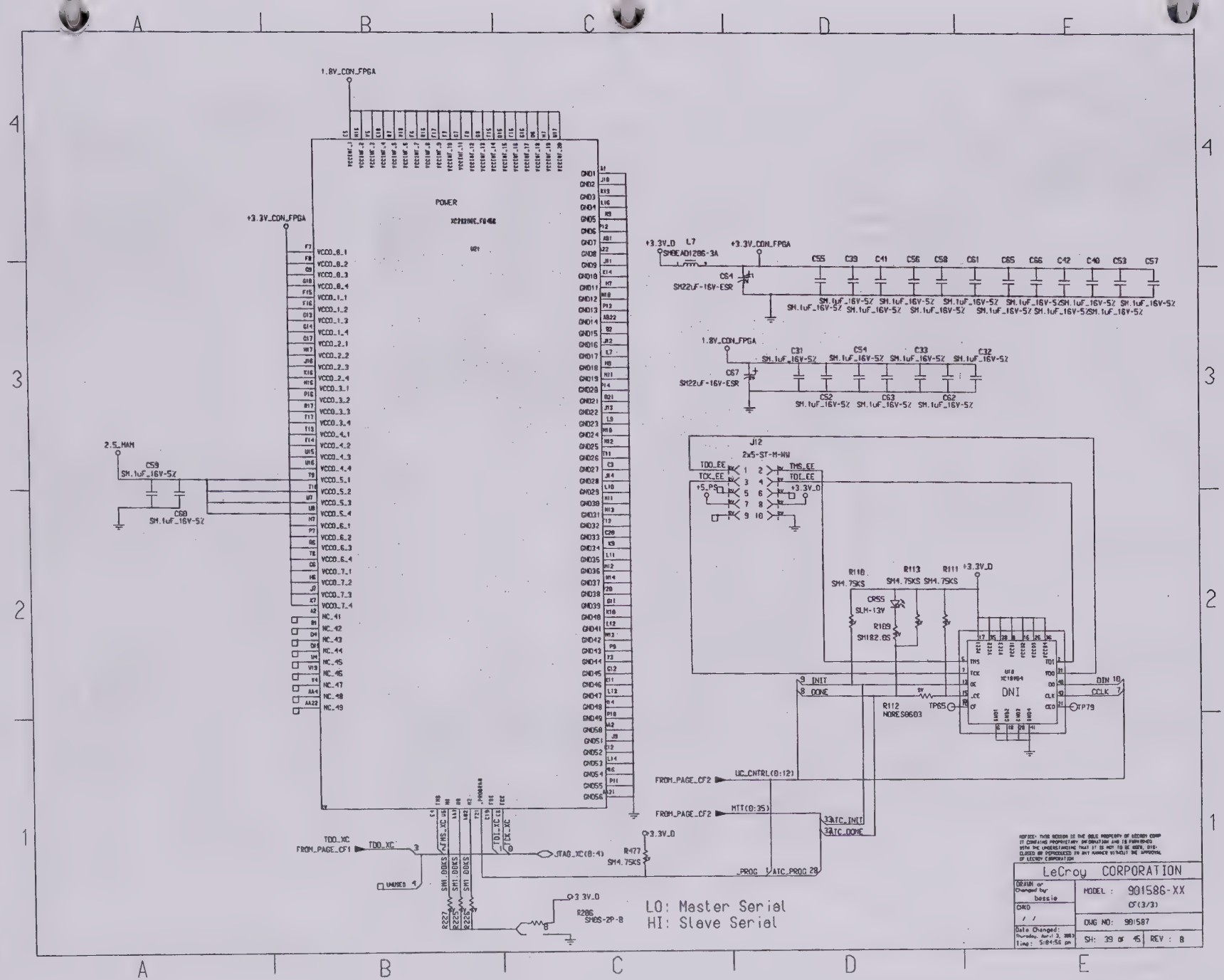
1.8V_CON_FPGA
POWER
+3.3V_CON_FPGA
2.5_MAM
C59
SM.1uF_16V-5Z
C60
SM.1uF_16V-5Z
+3.3V_D
L7
SMBEAD1206-3A
+3.3V_CON_FPGA
C55
C39
C41
C56
C58
C61
C65
C66
C42
C40
C53
C57
CS4
SM22uF-16V-ESR
SM.1uF_16V-5Z
1.8V_CON_FPGA
C31
C54
C33
C32
SM.1uF_16V-5Z
C67
SM22uF-16V-ESR
CS2
C63
C62
J12
2x5-ST-M-NW
TDO_EE
TMS_EE
TCK_EE
TDI_EE
+5_PS
+3.3V_D
R110
SM4.75KS
R113
SM4.75KS
R111
SM4.75KS
+3.3V_D
CR55
SLM-13V
R109
SM182.0S
DNI
INIT
DONE
R112
NORES0603
TP65
DIN
CCLK
TP79
UC_CNTRL(0:12)
FROM_PAGE_CF2
MIT(0:35)
FROM_PAGE_CF2
ATC_INIT
ATC_DONE
TDO_XC
FROM_PAGE_CF1
TDO_XC
JTAG_XC(8:4)
UNUSED
TMS_XC
TDI_XC
TCK_XC
+3.3V_D
R477
SM4.75KS
PROG
ATC_PROG
R227
R225
R226
SM1.00KS
+3.3V_D
R206
SM05-2P-8
LO: Master Serial
HI: Slave Serial
LeCroy CORPORATION
DRAWN or Changed by: bessie
CKD
Date Changed: Thursday, April 3, 2003 Time: 5:04:56 pm
MODEL : 901586-XX
CF(3/3)
DWG NO: 901587
SH: 39 OF 45
REV : B

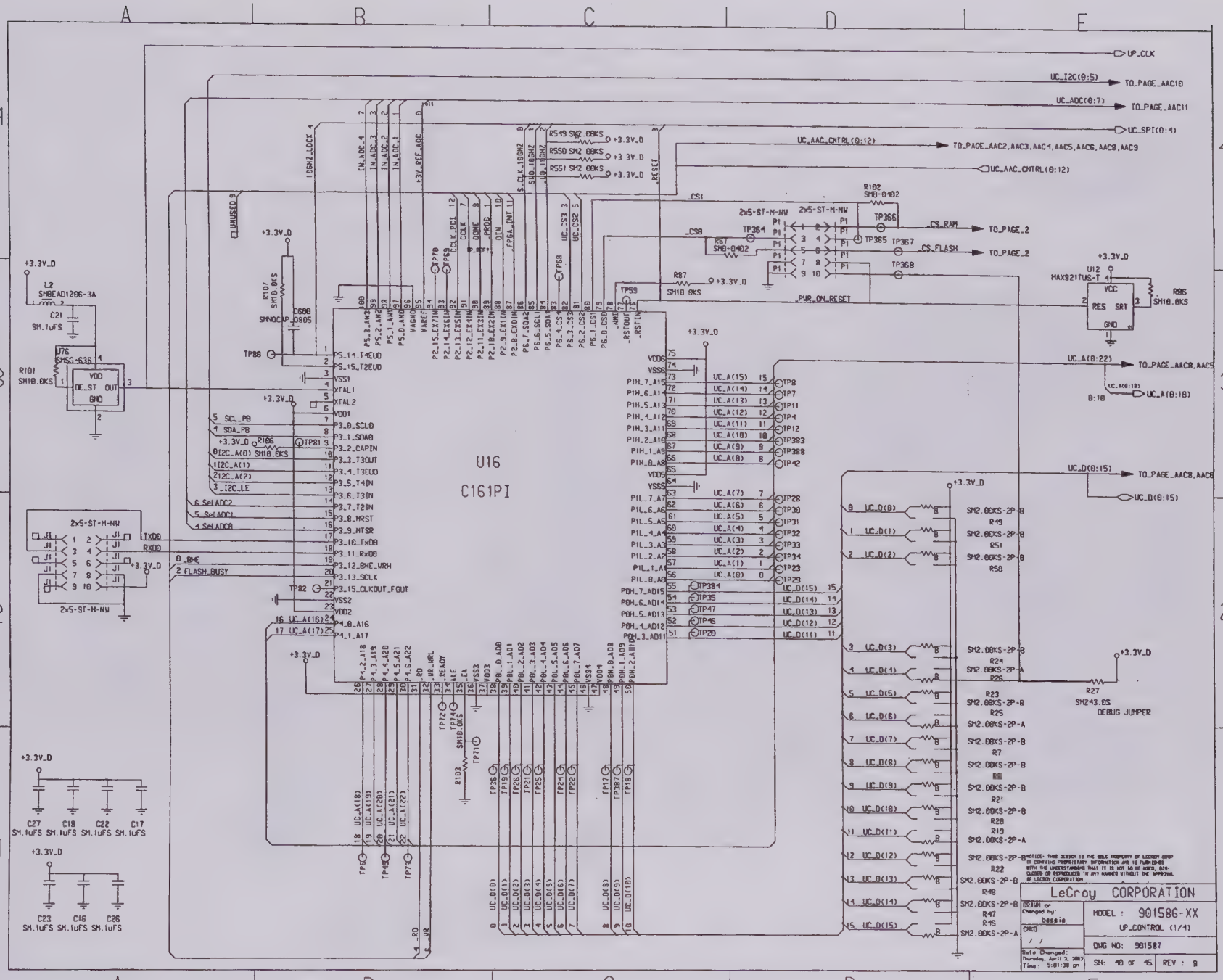
U16
C161PI
UP_CLK
UC_I2C(0:5)
TO_PAGE_AAC10
UC_ADC(0:7)
TO_PAGE_AAC11
UC_SPI(0:4)
UC_AAC_CNTRL(0:12)
TO_PAGE_AAC2,AAC3,AAC1,AAC5,AAC6,AAC8,AAC9
UC_AAC_CNTRL(0:12)
CS_RAM
TO_PAGE_2
CS_FLASH
TO_PAGE_2
PWR_ON_RESET
UC_A(0:22)
TO_PAGE_AAC8,AAC9
UC_A(0:18)
UC_D(0:15)
TO_PAGE_AAC8,AAC9
UC_D(0:15)
DEBUG JUMPER
LeCroy CORPORATION
MODEL : 901586-XX
UP_CONTROL (1/4)
DWG NO: 901587
SH: 40 of 45
REV : B

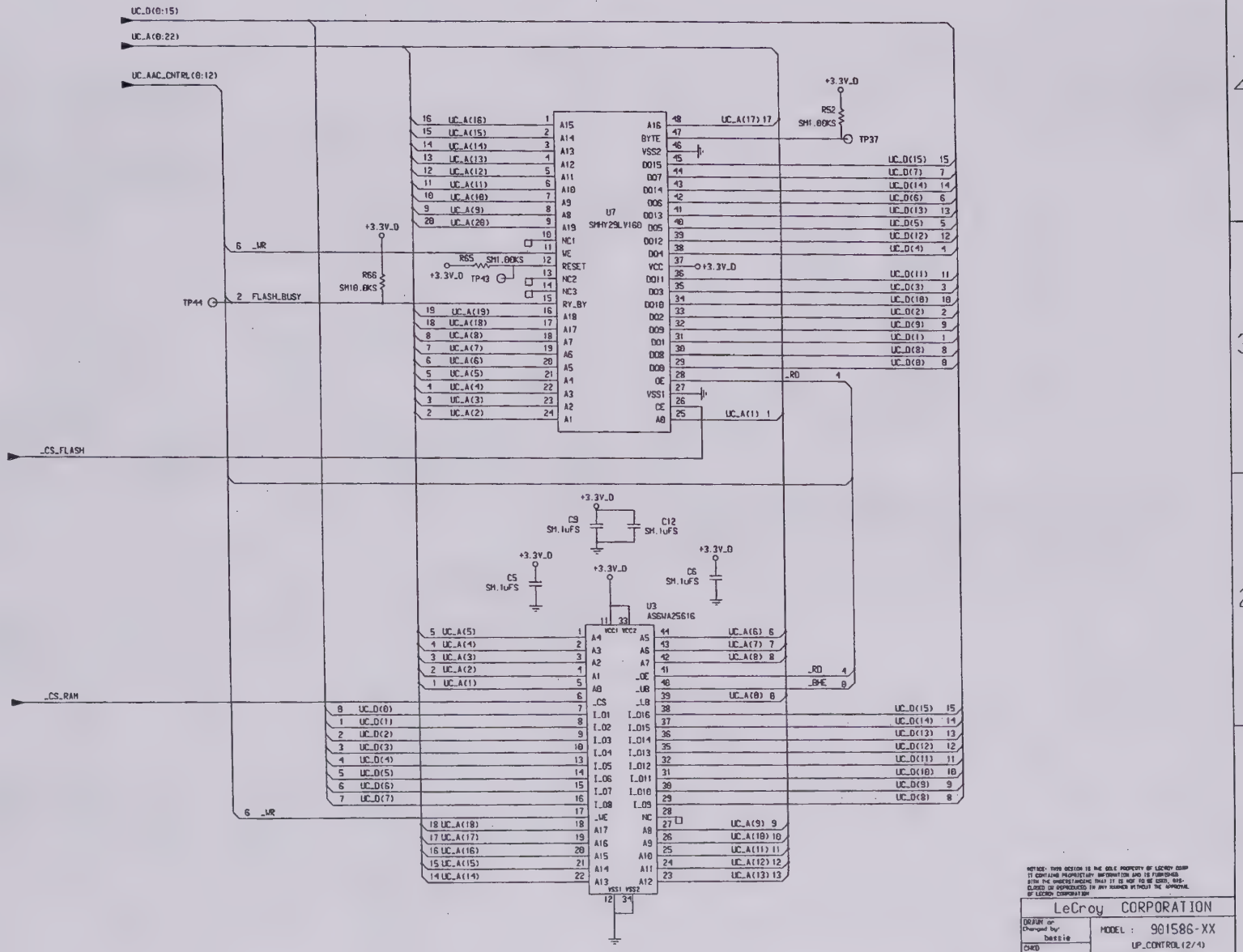

NOTICE: THIS DESIGN IS THE SOLE PROPERTY OF LECROY CORP
IT CONTAINS PROPRIETARY INFORMATION AND IS FURNISHED
WITH THE UNDERSTANDING THAT IT IS NOT TO BE USED, DIS-
CLOSED OR REPRODUCED IN ANY MANNER WITHOUT THE APPROVAL
OF LECROY CORPORATION

LeCroy CORPORATION

DRAWN or Changed by: bessie	MODEL : 901586-XX
CHKD / /	UP_CONTROL(2/4)
Date Changed: Thursday, April 3, 2003 Time: 5:06:59 pm	DWG NO: 901587
	SH: 41 OF 45 REV : B

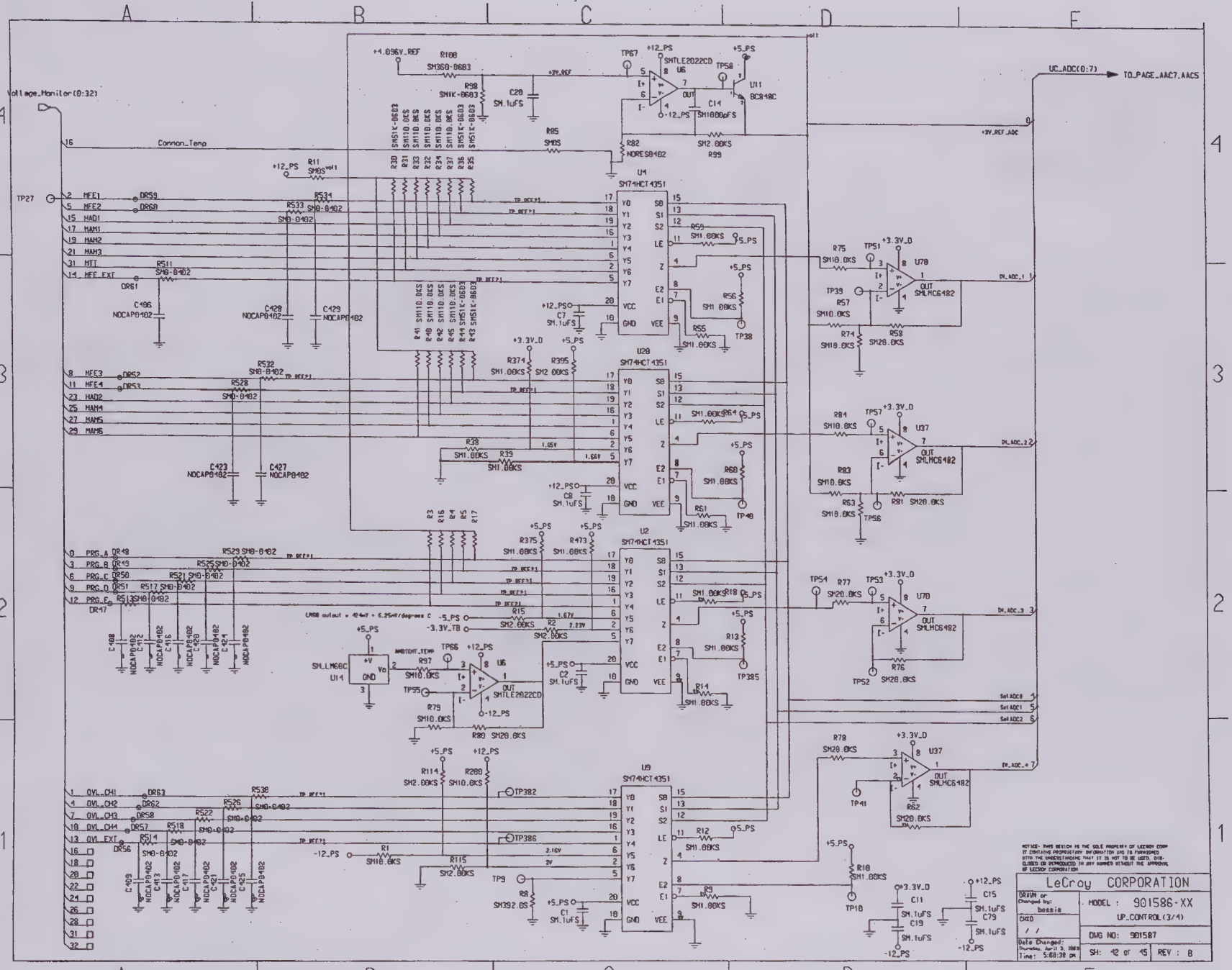
Voltage_Monitor(0:32)
Common_Temp
+4.096V_REF
+12_PS
+5_PS
+3.3V_D
-12_PS
-5_PS
-3.3V_TB
UC_ADC(0:7)
TO_PAGE_AAC7,AAC5
+2V_REF_ADC
SM74HCT4351
SMTLE2022CD
SMLMC6482
SMLLM60C
BC848C
LeCroy CORPORATION
MODEL : 9015B6-XX
UP_CONTROL(3/4)
DWG NO: 901587
SH: 42 OF 45
REV : B
DRAWN or Changed by: bessie
Date Changed: Thursday, April 3, 1997
Time: 5:08:38 PM

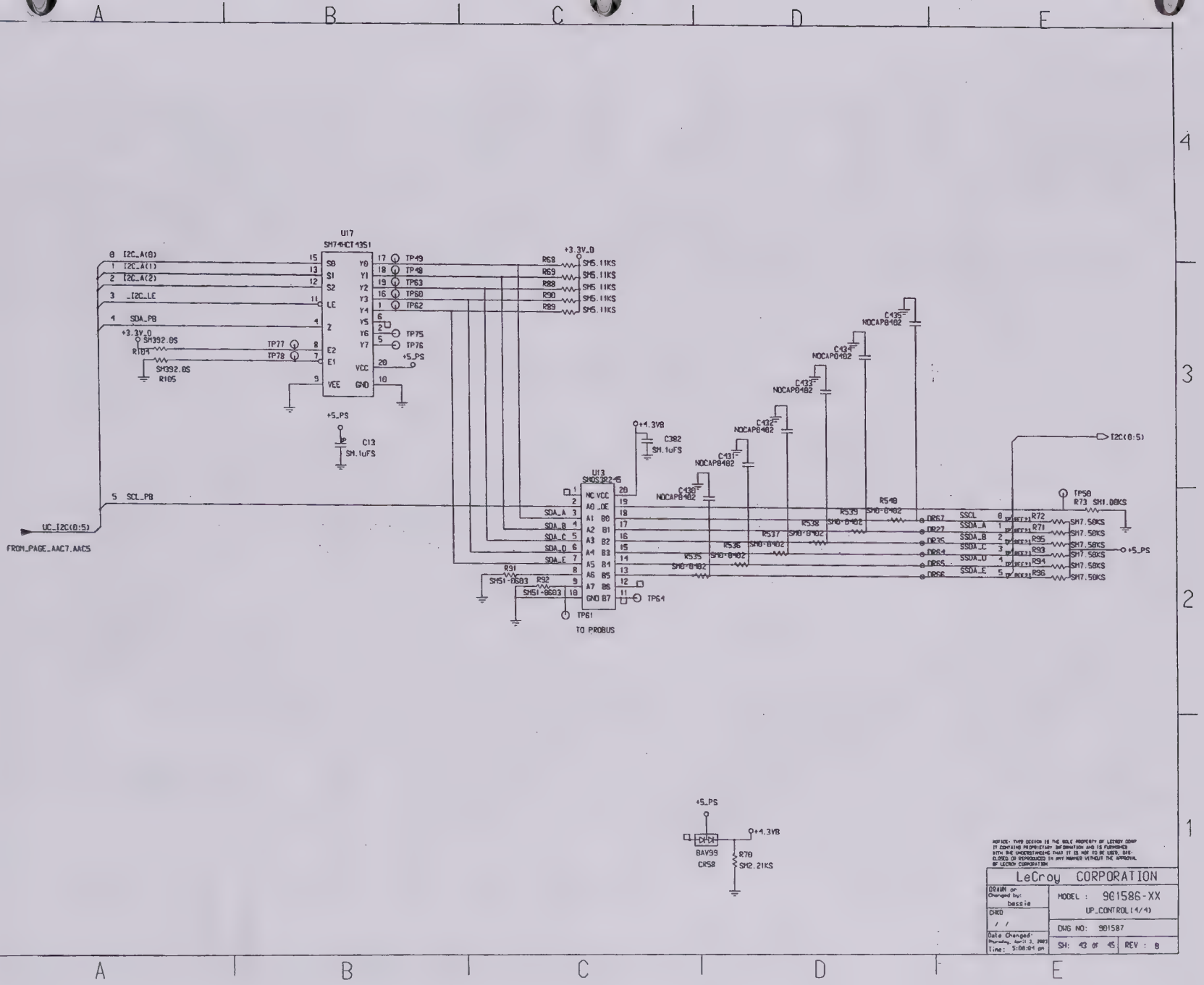

NOTICE: THIS DESIGN IS THE SOLE PROPERTY OF LECROY CORP
IT CONTAINS PROPRIETARY INFORMATION AND IS FURNISHED
WITH THE UNDERSTANDING THAT IT IS NOT TO BE USED, DIS-
CLOSED OR REPRODUCED IN ANY MANNER WITHOUT THE APPROVAL
OF LECROY CORPORATION

LeCroy CORPORATION

DRAWN on Changed by: bessie	MODEL : 9G158G-XX UP_CONTROL(4/4)
CHKD / /	DWG NO: 901587
Date Changed: Thursday, April 3, 2003 Time: 5:08:04 pm	SH: 43 OF 45 | REV : B

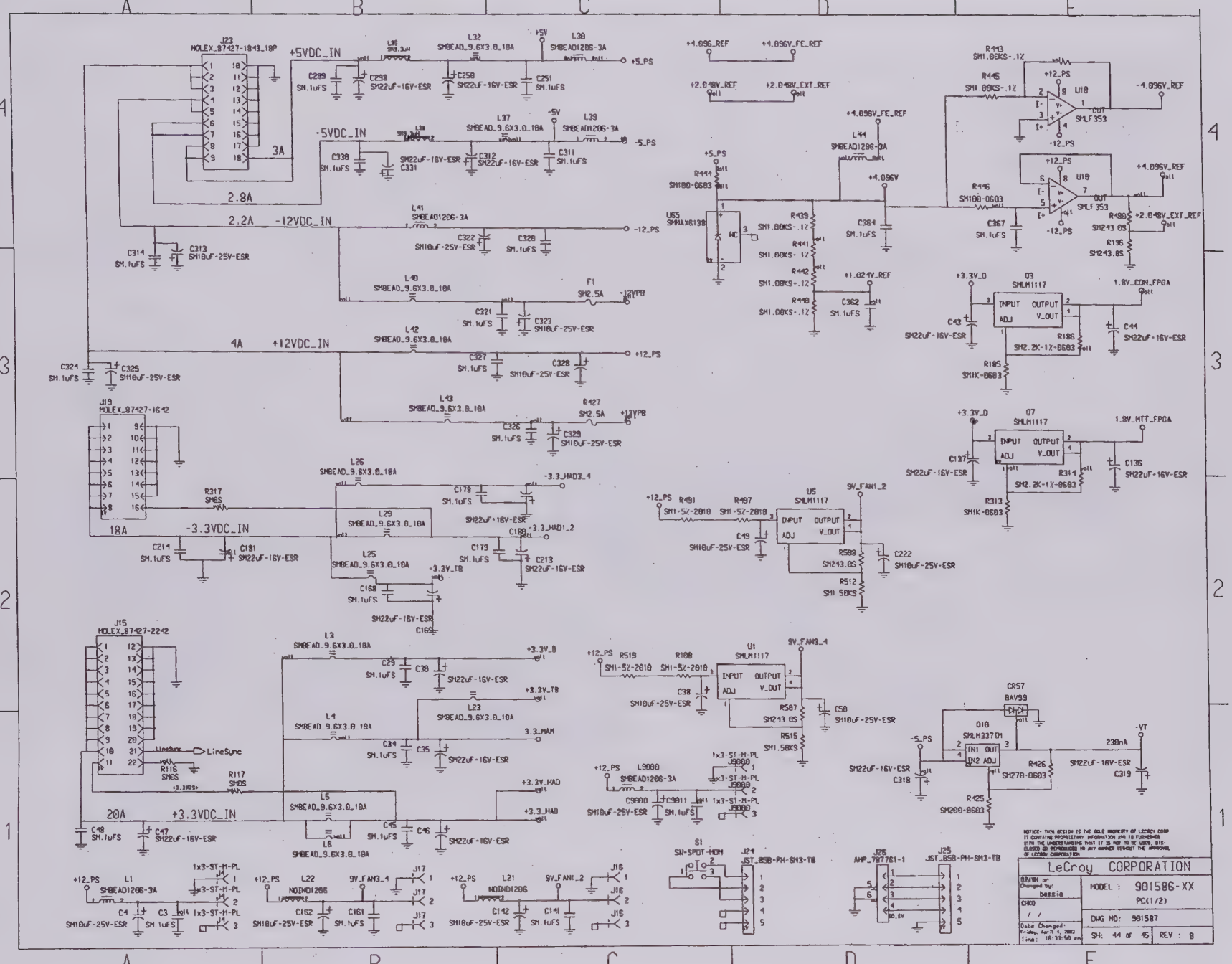
+5VDC_IN
-5VDC_IN
-12VDC_IN
+12VDC_IN
-3.3VDC_IN
+3.3VDC_IN
+4.096V_REF
+4.096V_FE_REF
+2.048V_REF
+2.048V_EXT_REF
+1.024V_REF
+4.096V
+3.3V_D
+3.3V_TB
+3.3V_HAD
3.3_HAM
1.8V_CON_FPGA
1.8V_MTT_FPGA
9V_FAN1_2
9V_FAN3_4
LeCroy CORPORATION
MODEL : 901586-XX
PC(1/2)
DWG NO: 901587
SH: 44 of 45
REV : B

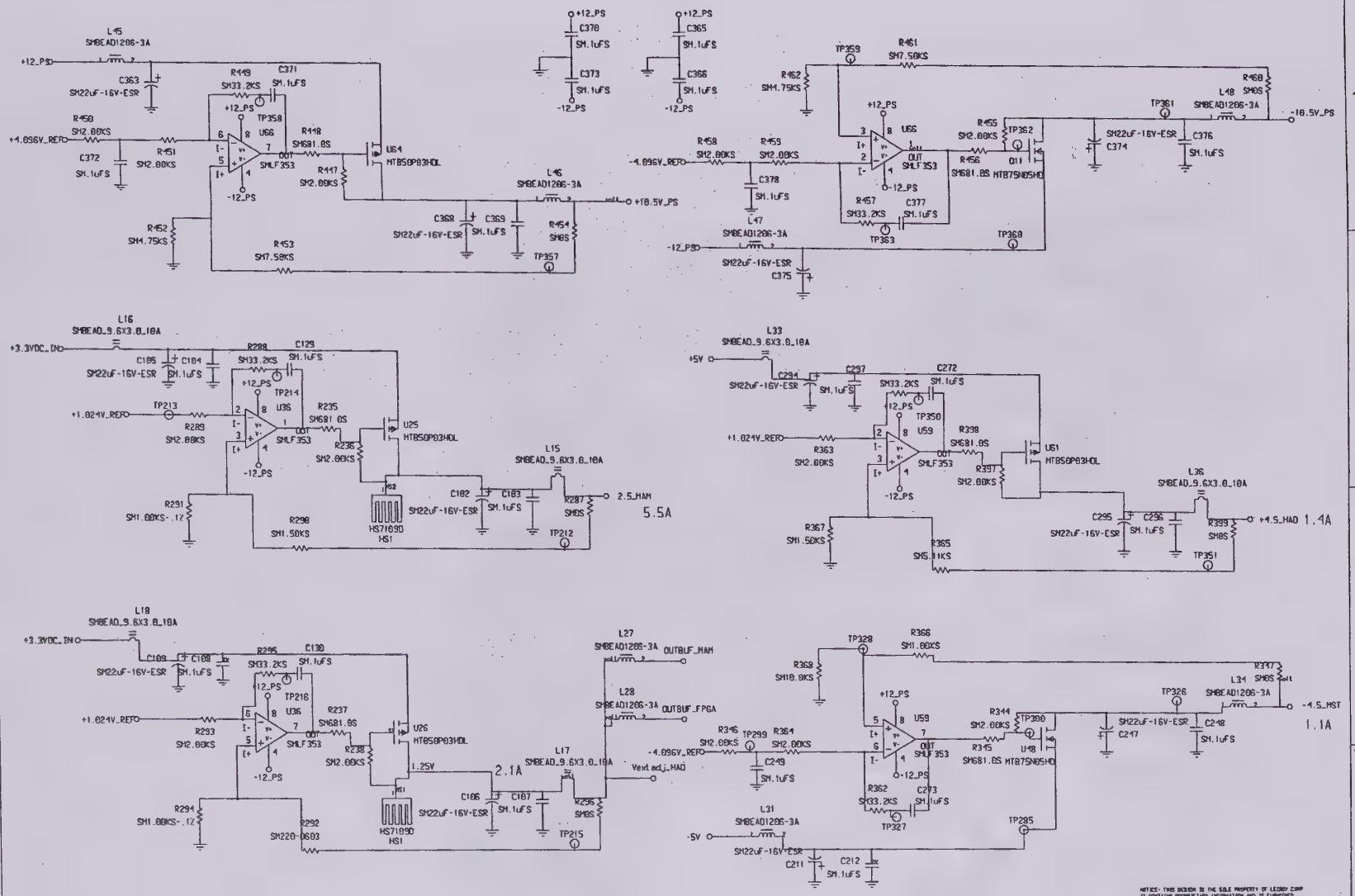

NOTICE: THIS DESIGN IS THE SOLE PROPERTY OF LECROY CORP IT CONTAINS PROPRIETARY INFORMATION AND IS FURNISHED WITH THE UNDERSTANDING THAT IT IS NOT TO BE USED, DISCLOSED OR REPRODUCED IN ANY MANNER WITHOUT THE APPROVAL OF LECROY CORPORATION

LeCroy CORPORATION	
DRAWN or Changed by: bessie	MODEL : 901586-XX PC(2/2)
CHKD / /	DWG NO: 901587
Date Changed: Friday, April 4, 2003 Time: 10:34:52 am	SH: 45 OF 45 REV : B

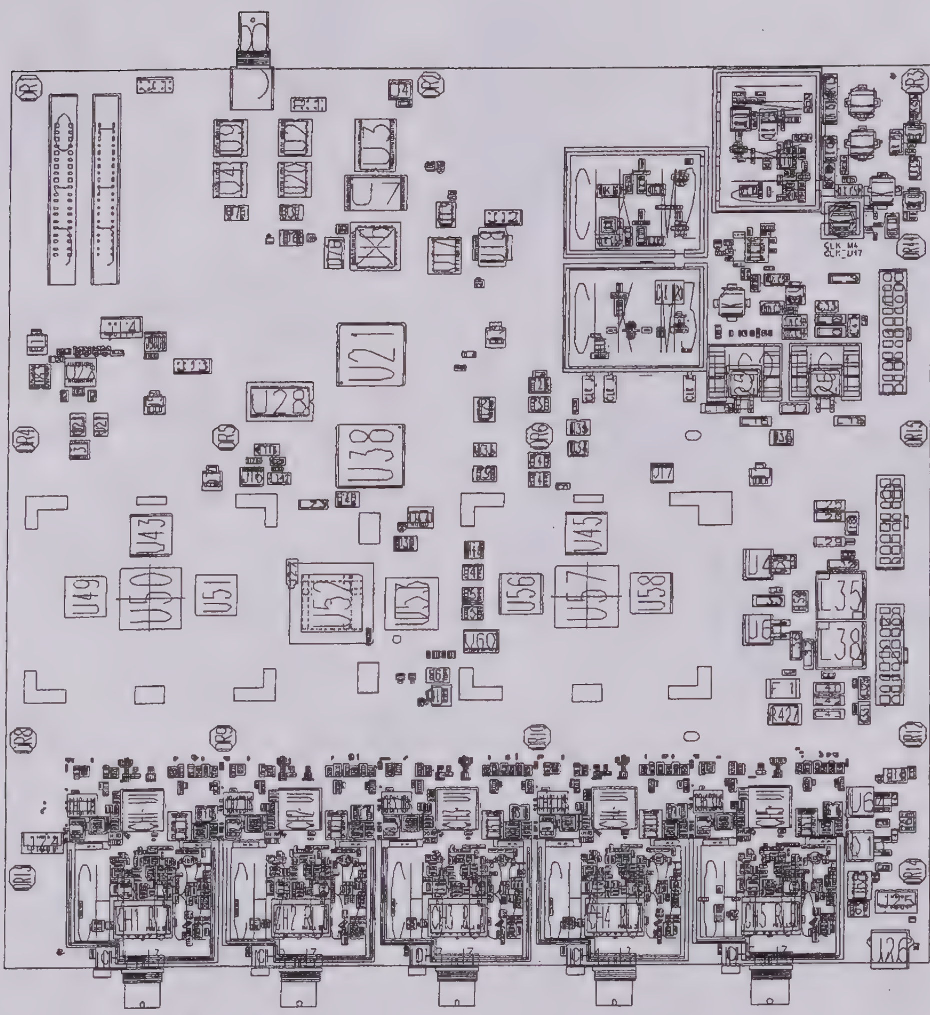

Acquisition Card – Top Side

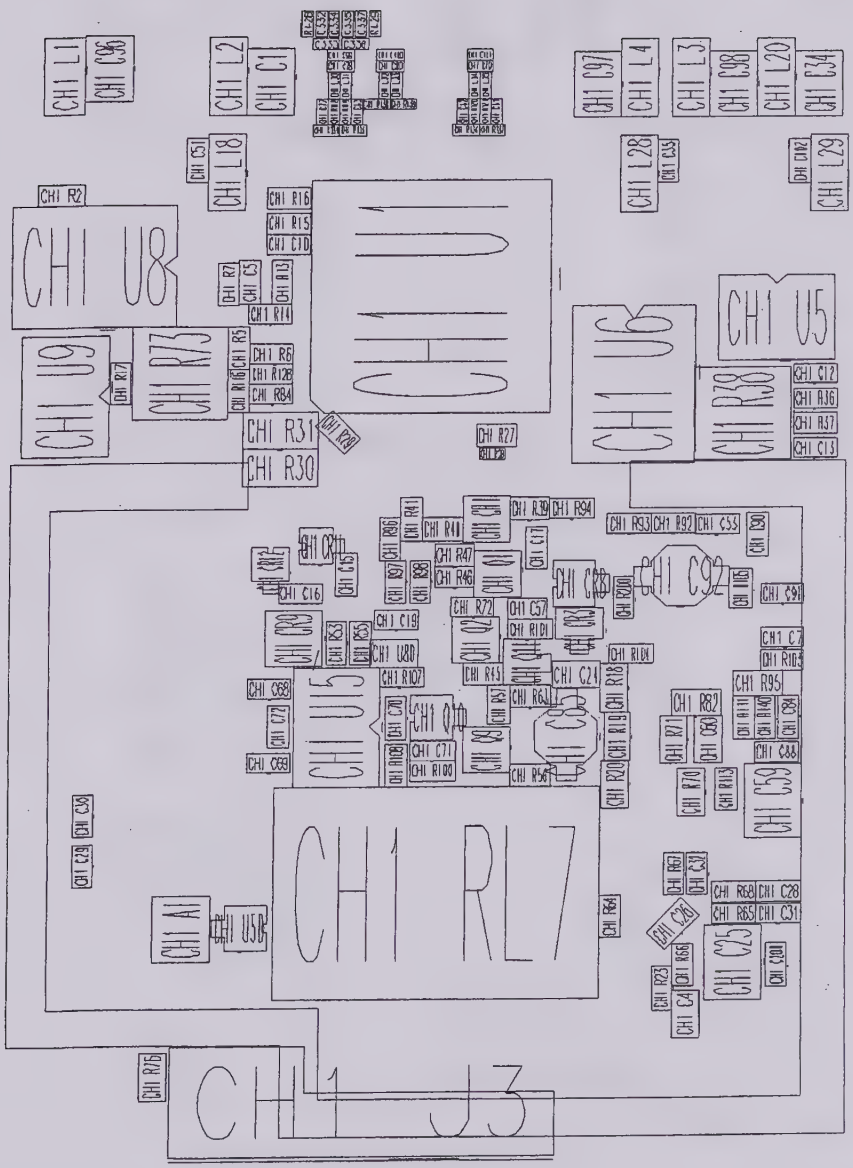

Channel 1 – Top Side

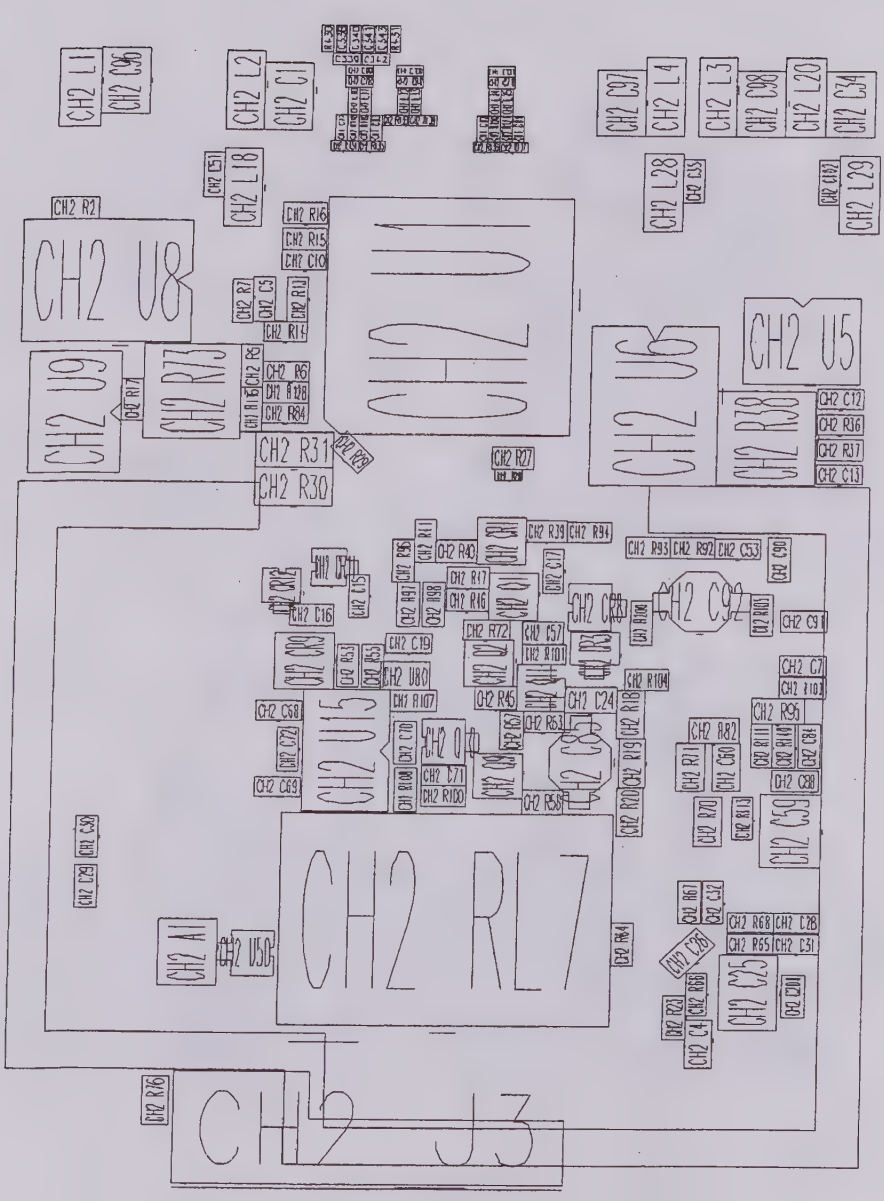

Channel 2 – Top Side

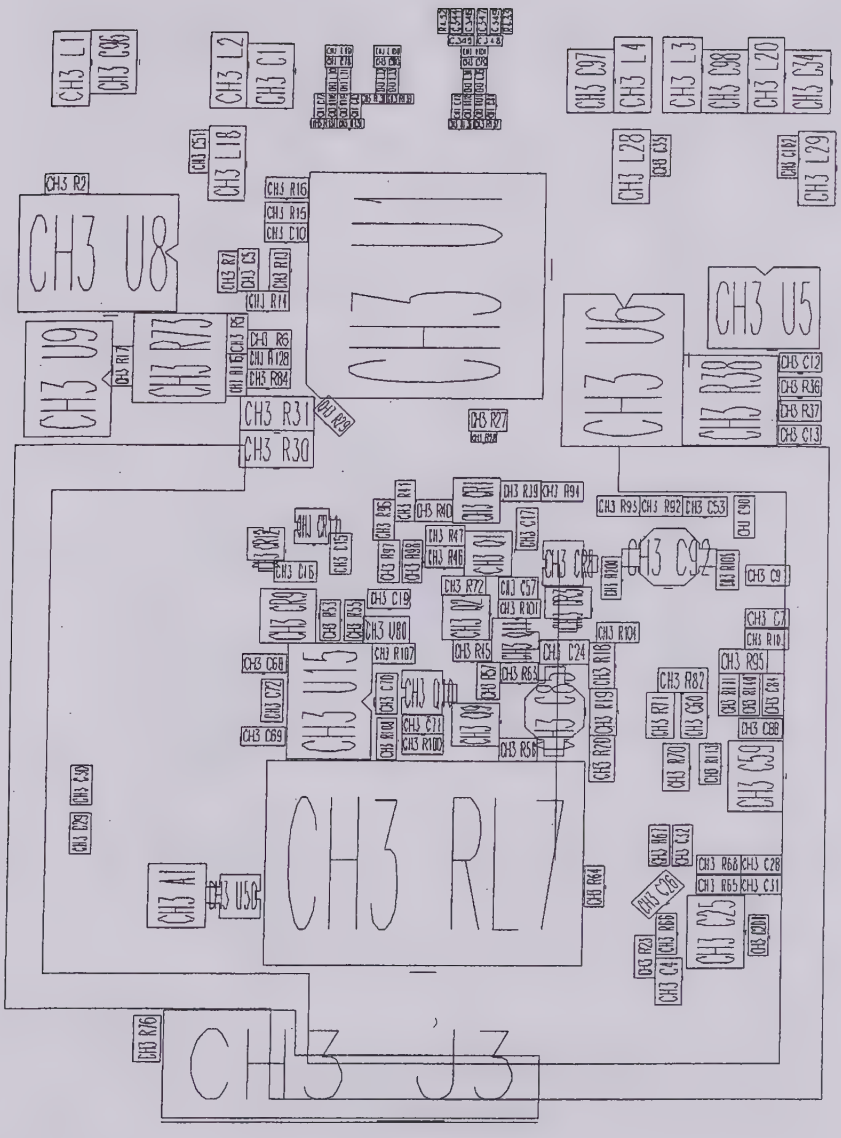

Channel 3 – Top Side

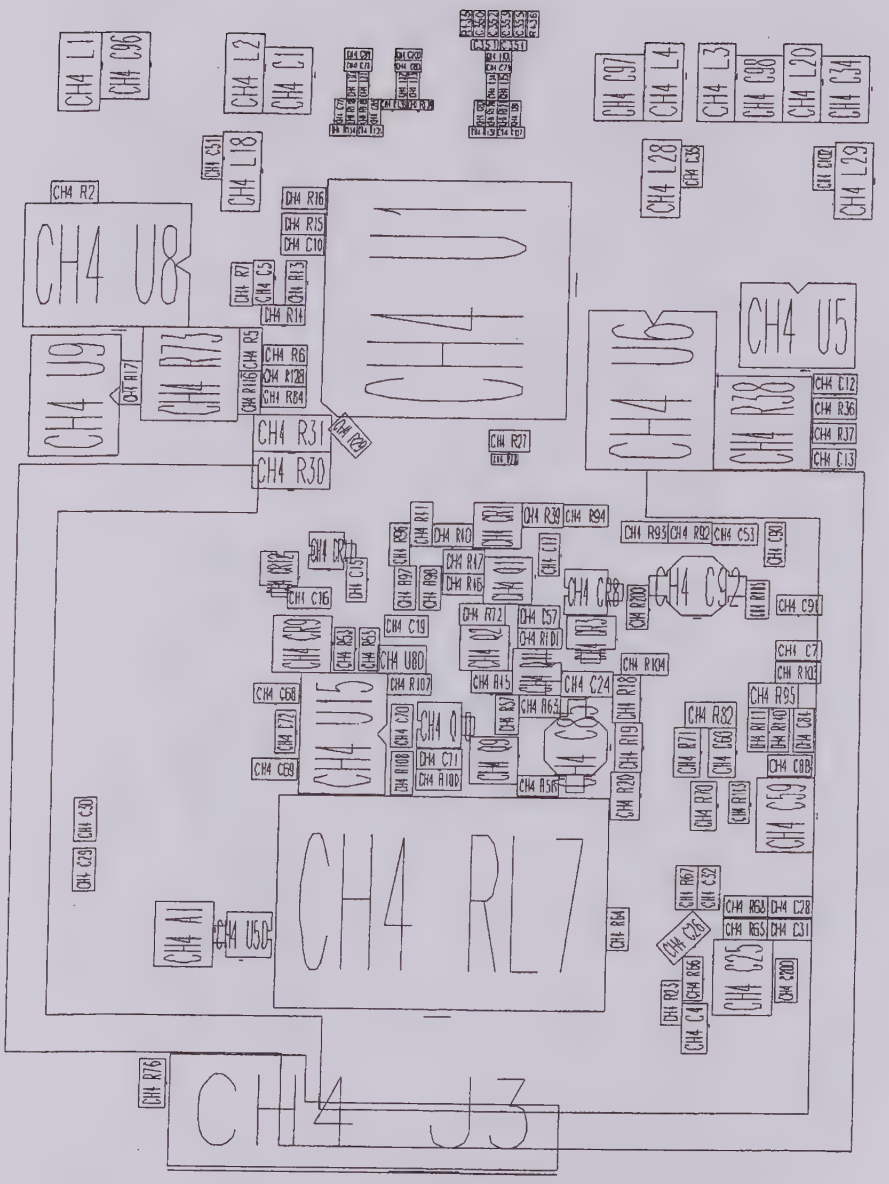

Channel 4 – Top Side

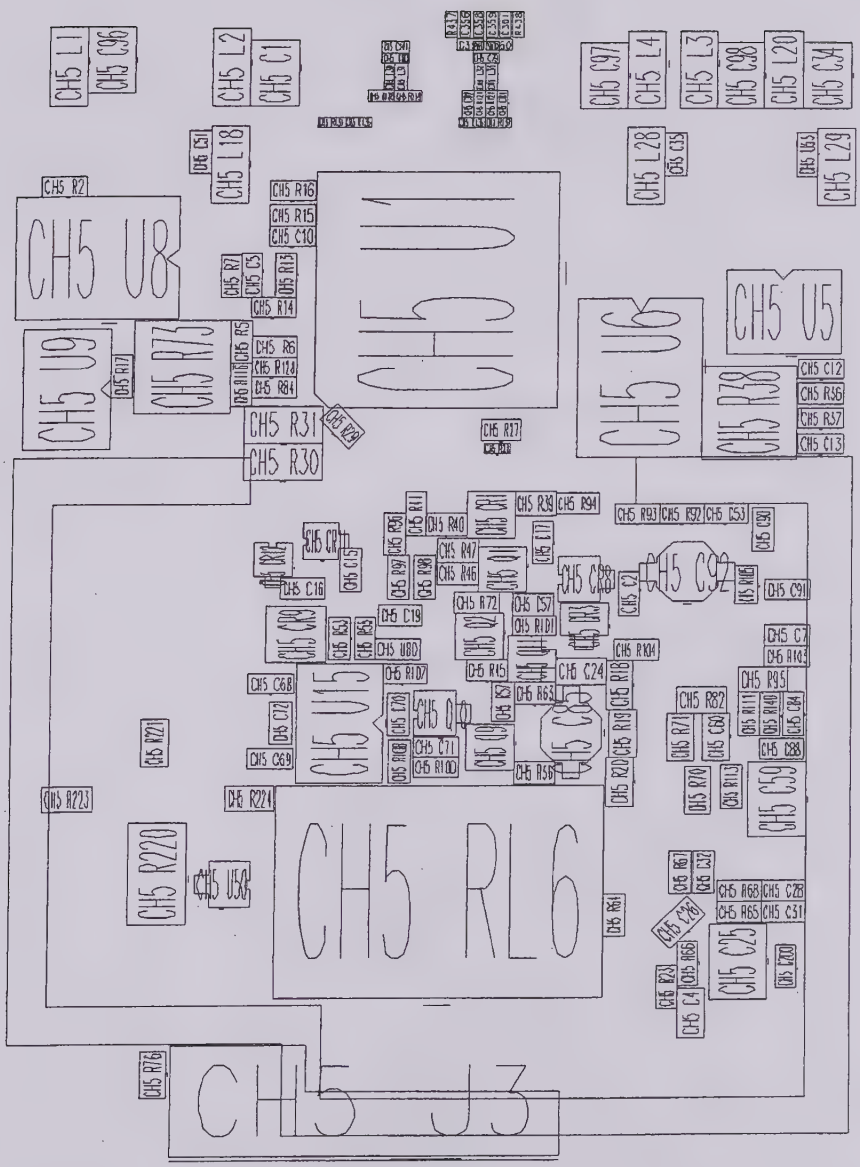

External Trigger – Top Side

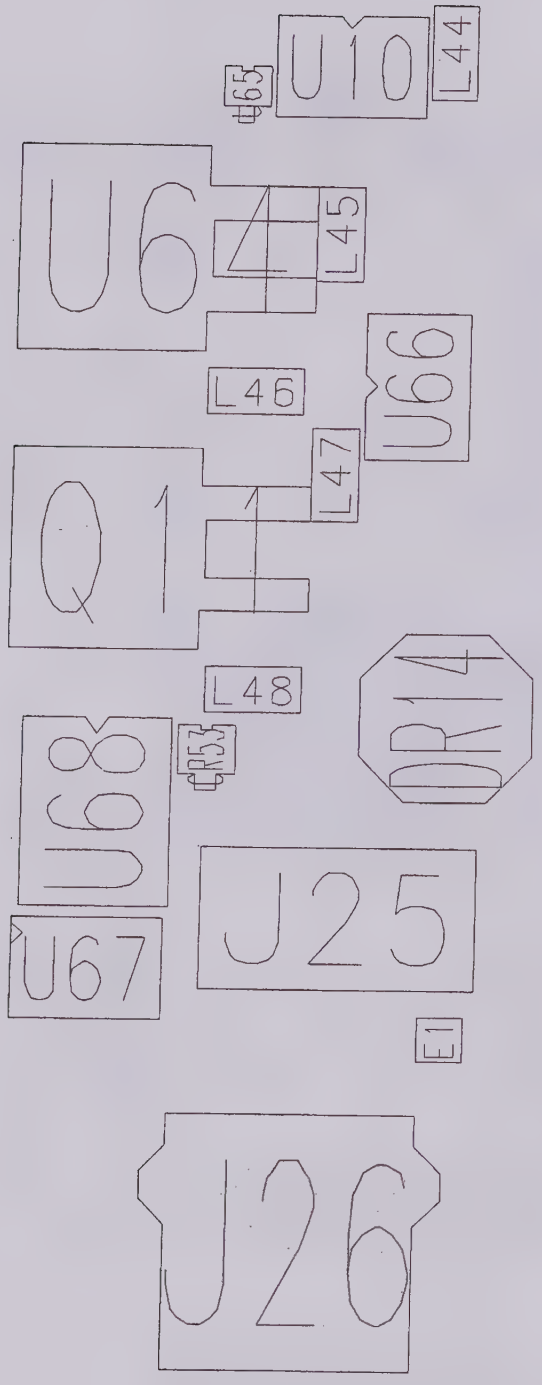

Probe Cal & USB Interface – Top Side

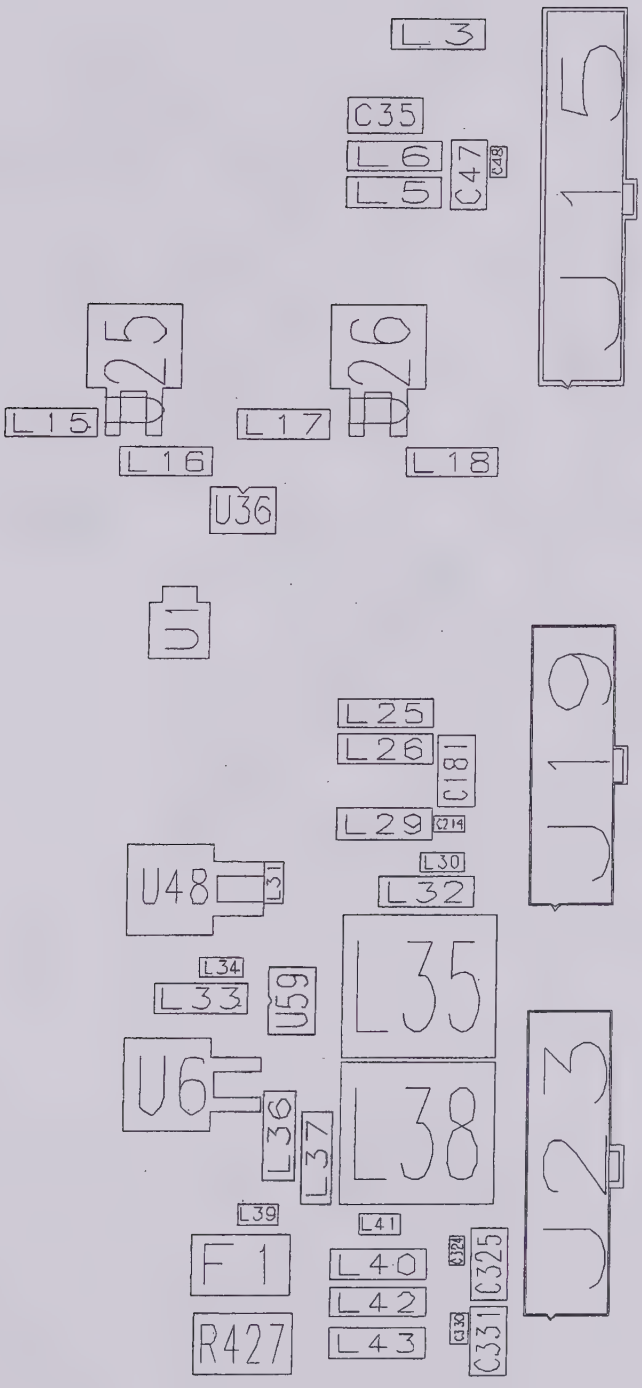

Power Section – Top Side

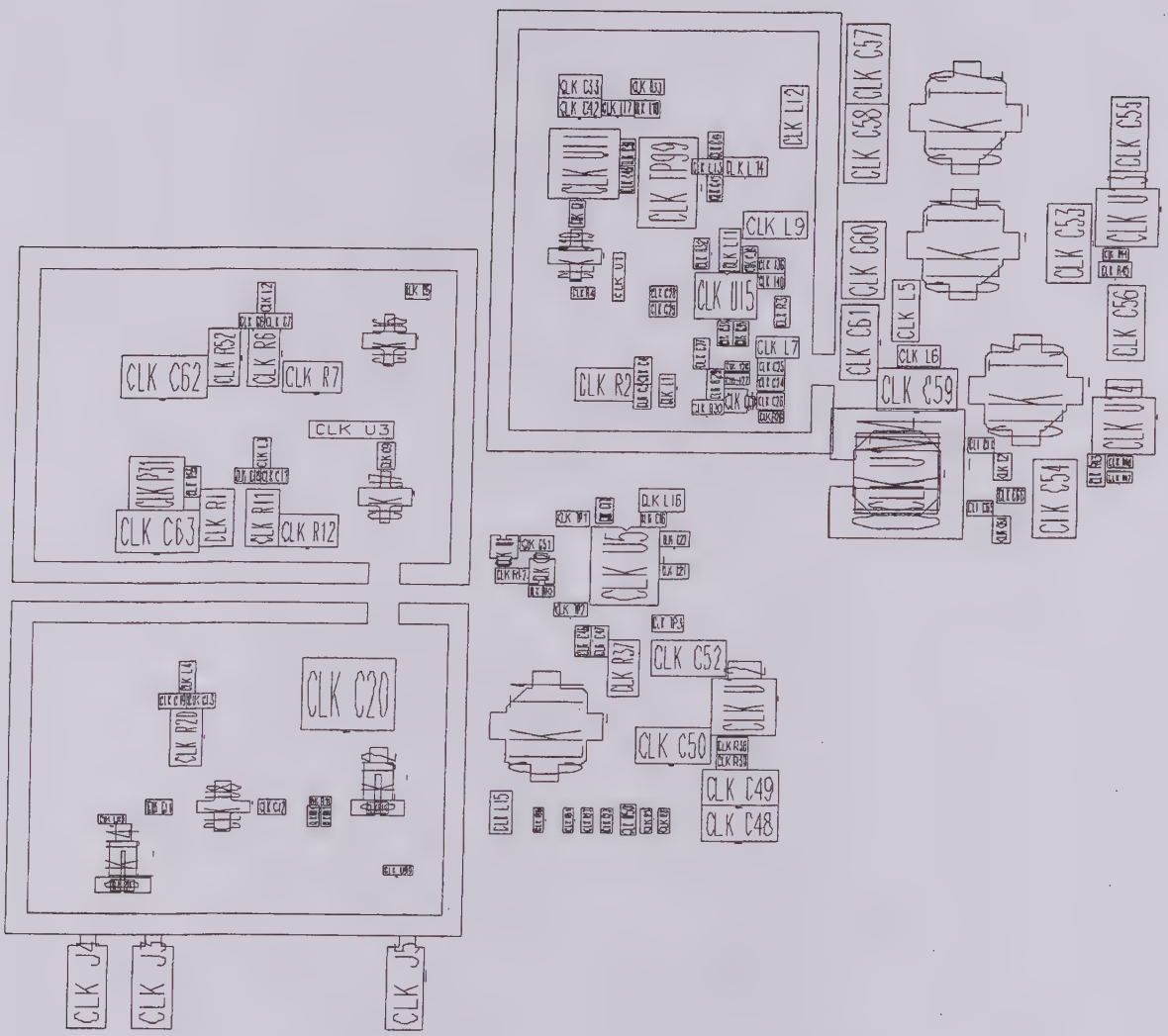

10 GHz Clock – Top Side

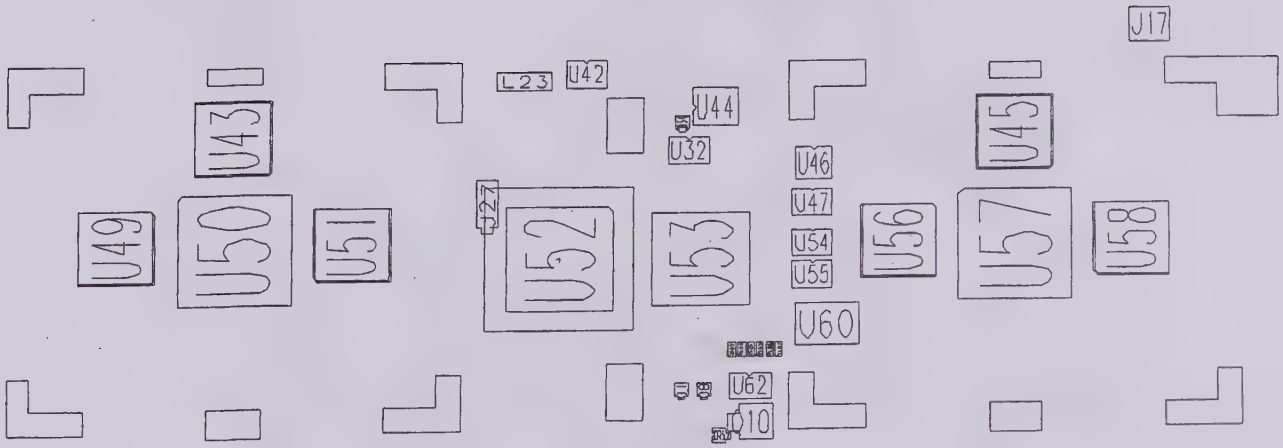

ADC & Memory – Top Side

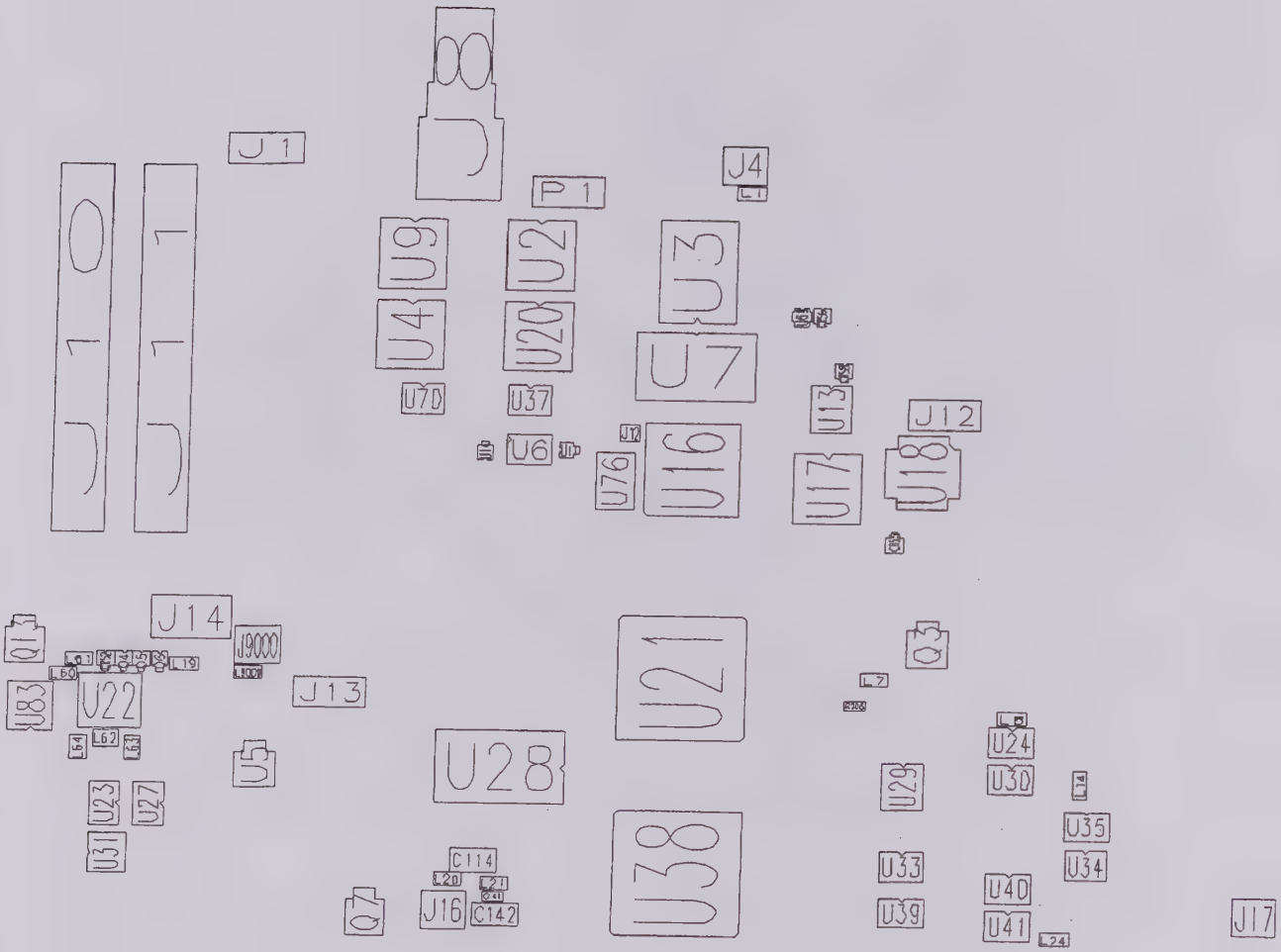

PCI Interface – Top Side

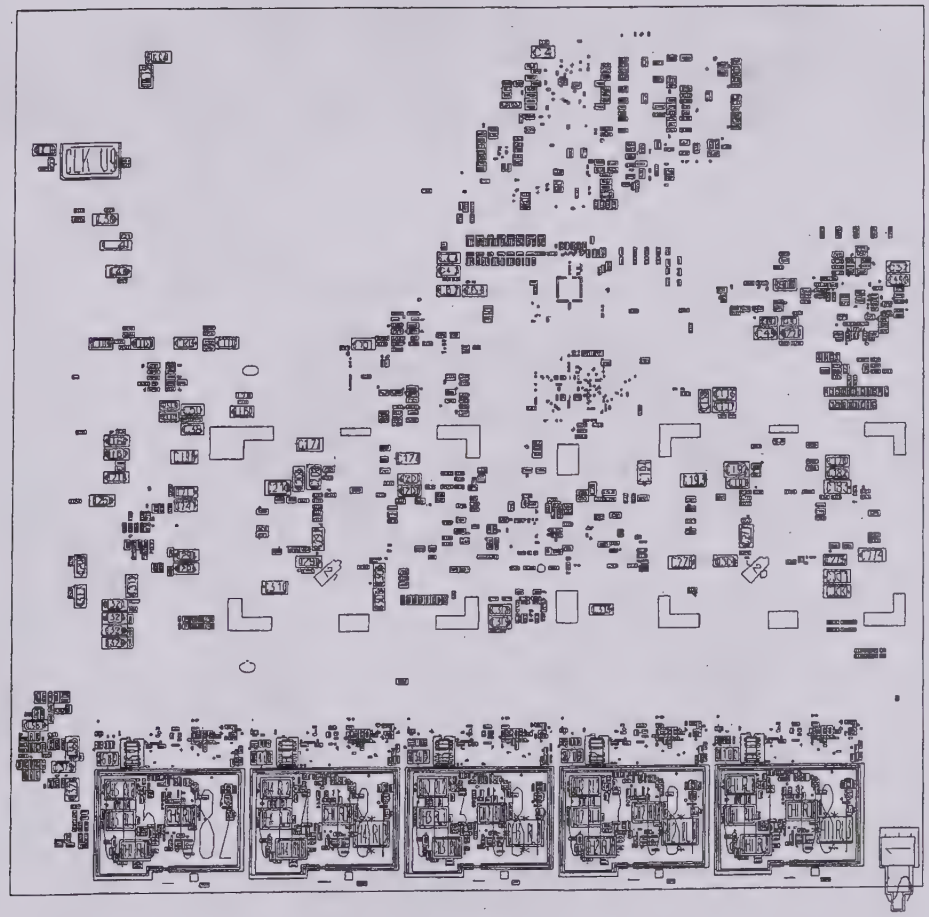

Acquisition Card – Bottom Side

Channel 1 - Bottom Side

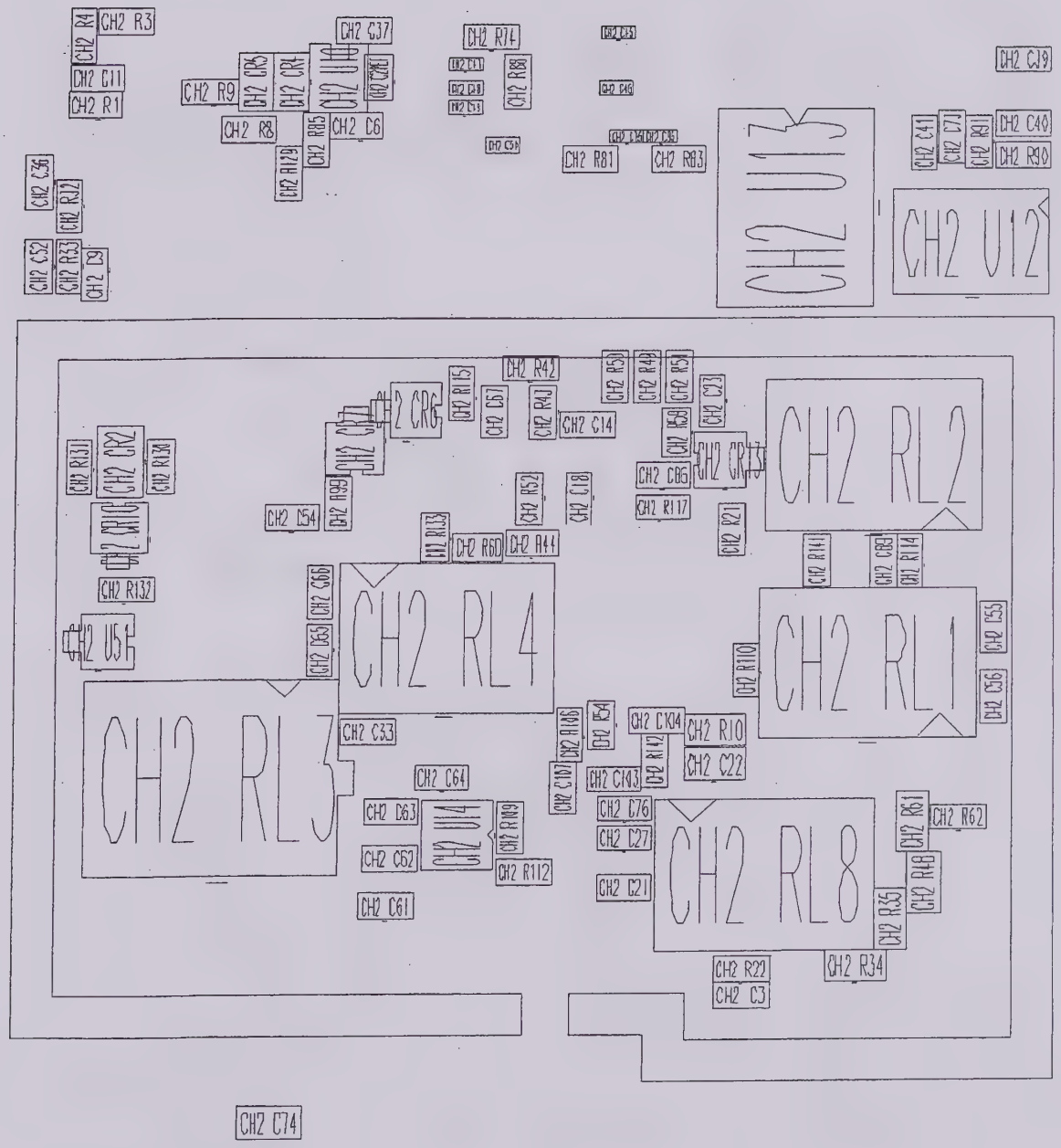

Channel 2 – Bottom Side

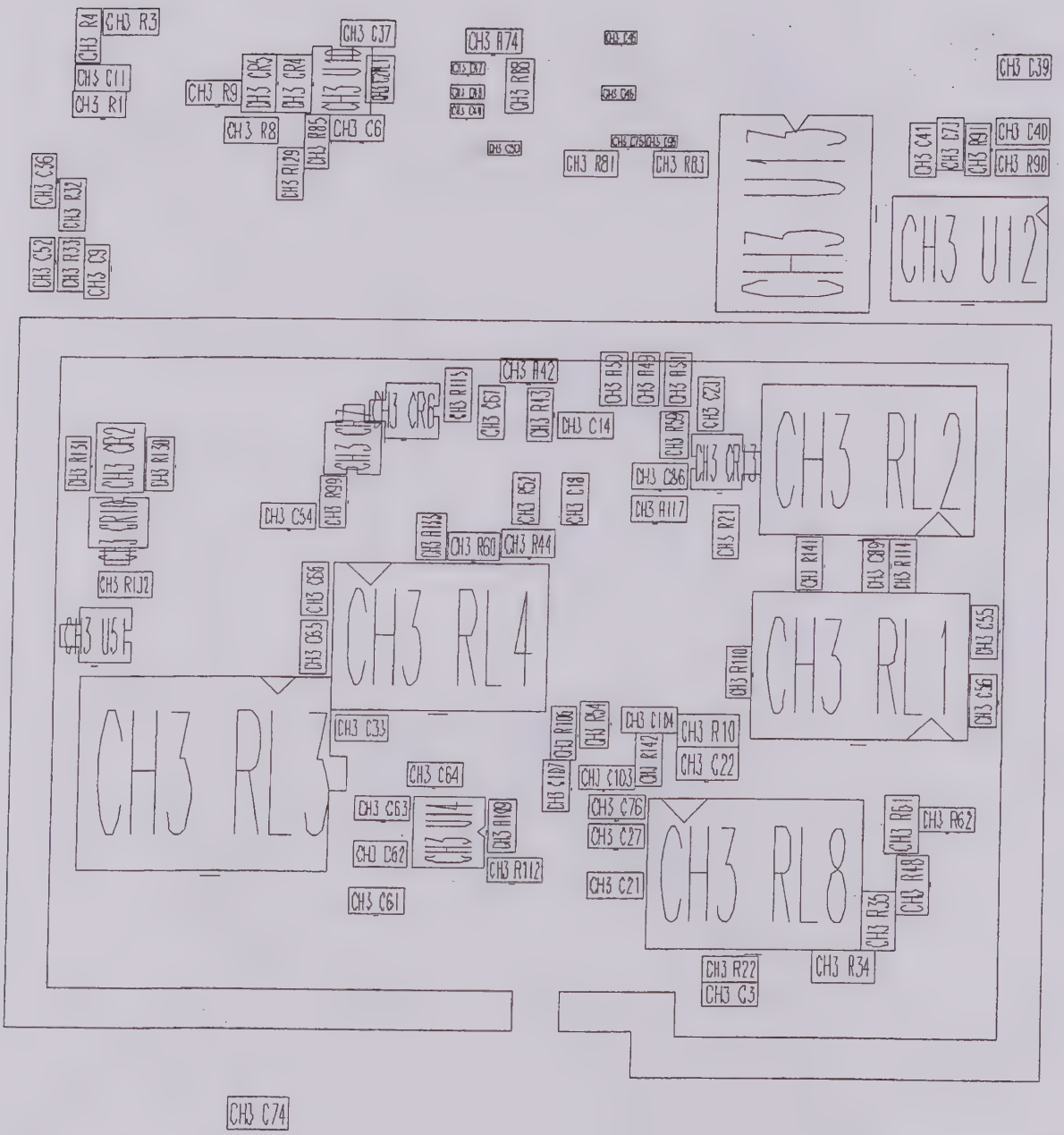

Channel 3 – Bottom Side

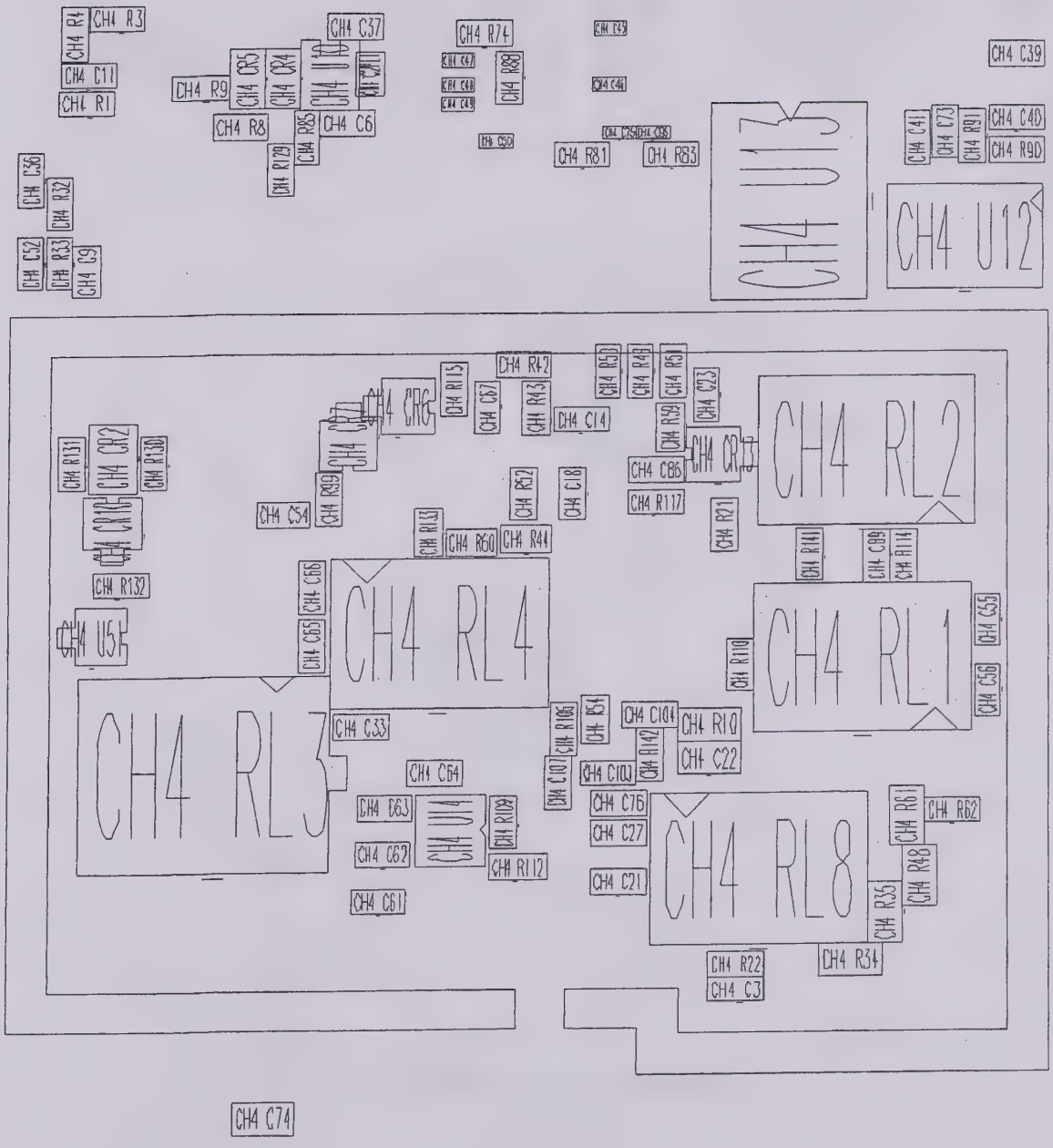

Channel 4 – Bottom Side

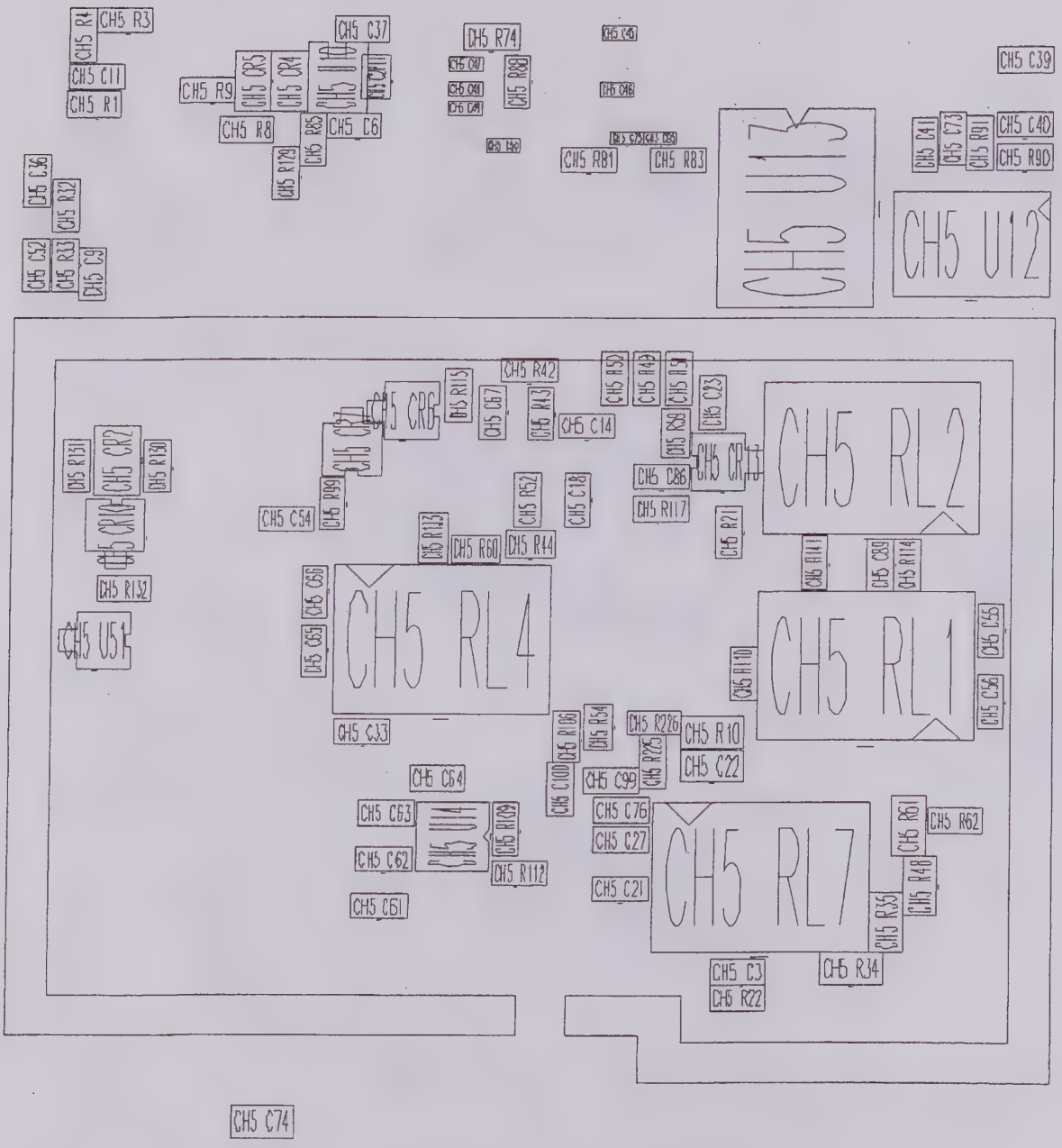

External Trigger - Bottom Side

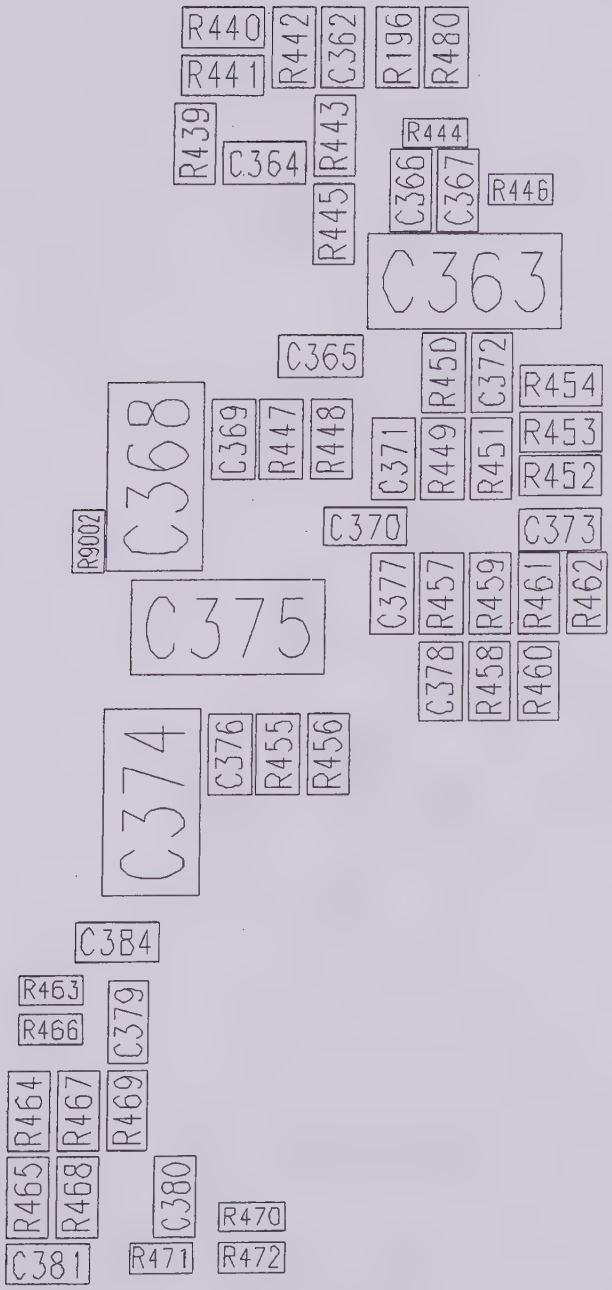

Probe Cal & USB Interface - Bottom Side

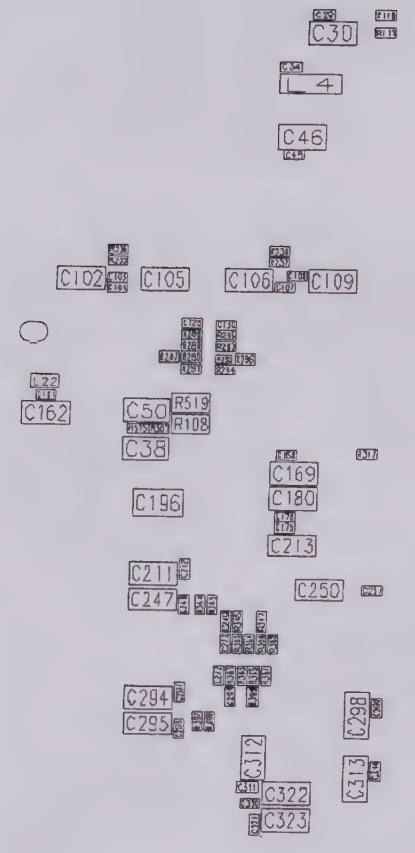

Power Section - Bottom Side

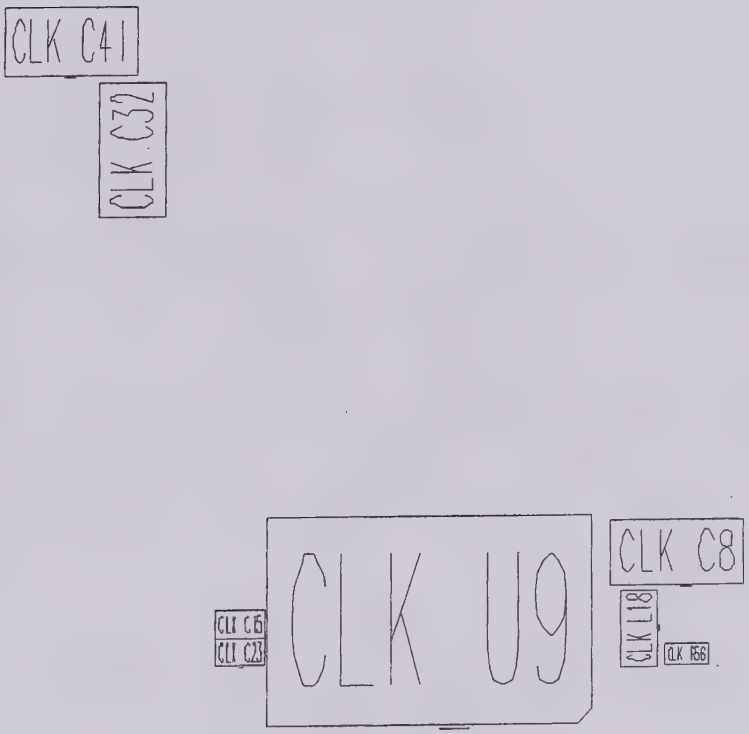

10 GHz Clock - Bottom Side

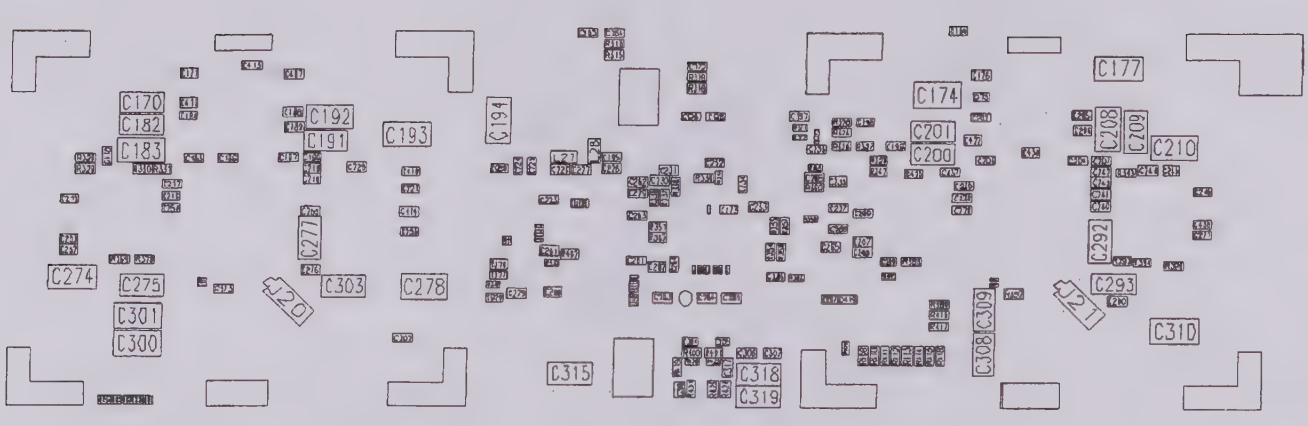

ADC & Memory - Bottom Side

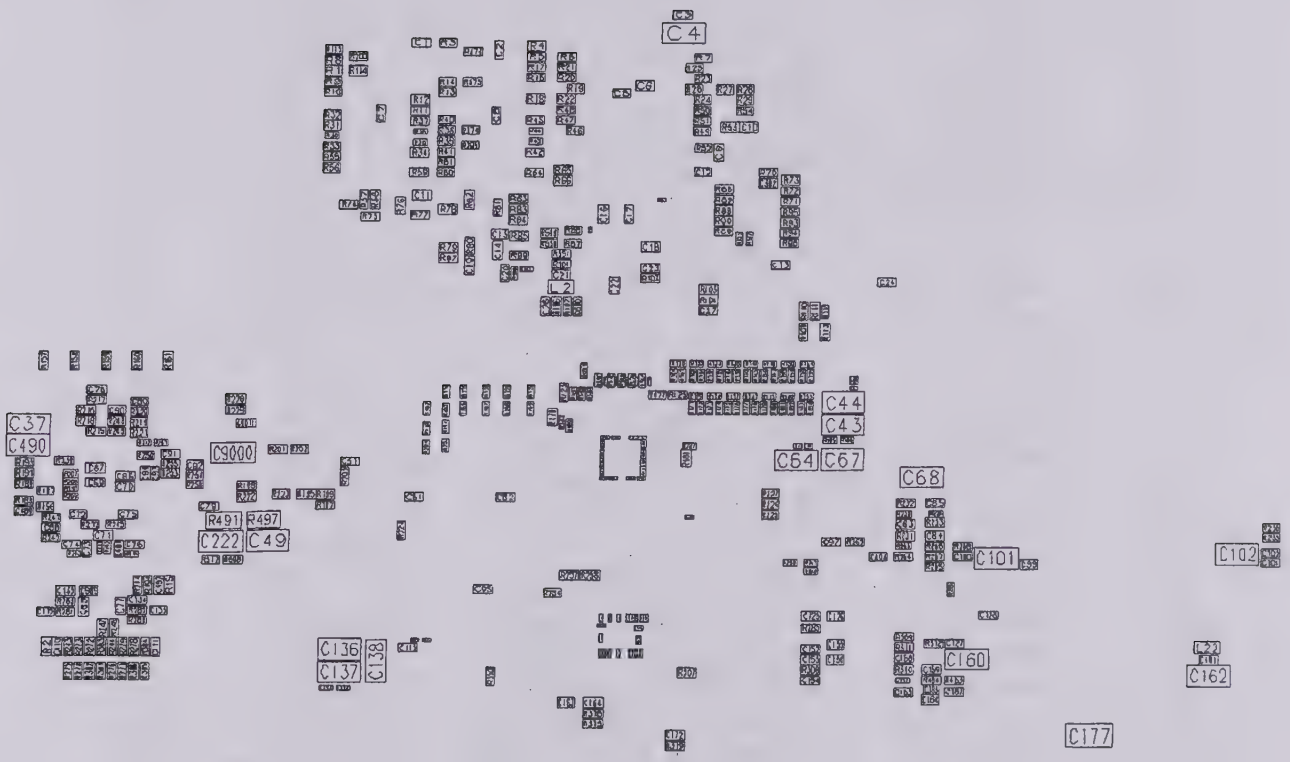

PCI Interface - Bottom Side

Part #: 901586-00 Description: 2 GHz 5GS/s 4 Channel Acquisition Board

Location	Part Number	Description
C1	SM661207104	Cap Cera Chip 20 % .1 UF
C2	SM661207104	Cap Cera Chip 20 % .1 UF
C3	SM661207104	Cap Cera Chip 20 % .1 UF
C4	SM668025106	Cap,tant 10UF/25V 20% L Esr
C5	SM661207104	Cap Cera Chip 20 % .1 UF
C6	SM661207104	Cap Cera Chip 20 % .1 UF
C7	SM661207104	Cap Cera Chip 20 % .1 UF
C8	SM661207104	Cap Cera Chip 20 % .1 UF
C9	SM661207104	Cap Cera Chip 20 % .1 UF
C10	SM661207104	Cap Cera Chip 20 % .1 UF
C11	SM661207104	Cap Cera Chip 20 % .1 UF
C12	SM661207104	Cap Cera Chip 20 % .1 UF
C13	SM661207104	Cap Cera Chip 20 % .1 UF
C14	SM661165102	Cap Cera Chip 1000PF
C15	SM661207104	Cap Cera Chip 20 % .1 UF
C16	SM661207104	Cap Cera Chip 20 % .1 UF
C17	SM661207104	Cap Cera Chip 20 % .1 UF
C18	SM661207104	Cap Cera Chip 20 % .1 UF
C19	SM661207104	Cap Cera Chip 20 % .1 UF
C20	SM661207104	Cap Cera Chip 20 % .1 UF
C21	SM661207104	Cap Cera Chip 20 % .1 UF
C22	SM661207104	Cap Cera Chip 20 % .1 UF
C23	SM661207104	Cap Cera Chip 20 % .1 UF
C24	SM661207104	Cap Cera Chip 20 % .1 UF
C26	SM661207104	Cap Cera Chip 20 % .1 UF
C27	SM661207104	Cap Cera Chip 20 % .1 UF
C29	SM661207104	Cap Cera Chip 20 % .1 UF
C30	SM668016226	Cap tant 22UF/16V 20 % L Esr
C31	SM662151001	Cap Cera Chip 10% 16V 0.1 UF
C32	SM662151001	Cap Cera Chip 10% 16V 0.1 UF
C33	SM662151001	Cap Cera Chip 10% 16V 0.1 UF
C34	SM661207104	Cap Cera Chip 20 % .1 UF
C35	SM668016226	Cap tant 22UF/16V 20 % L Esr
C36	SM661207104	Cap Cera Chip 20 % .1 UF
C37	SM668016226	Cap tant 22UF/16V 20 % L Esr
C38	SM668025106	Cap,tant 10UF/25V 20% L Esr
C39	SM662151001	Cap Cera Chip 10% 16V 0.1 UF
C40	SM662151001	Cap Cera Chip 10% 16V 0.1 UF
C41	SM662151001	Cap Cera Chip 10% 16V 0.1 UF
C42	SM662151001	Cap Cera Chip 10% 16V 0.1 UF
C43	SM668016226	Cap tant 22UF/16V 20 % L Esr
C44	SM668016226	Cap tant 22UF/16V 20 % L Esr
C45	SM661207104	Cap Cera Chip 20 % .1 UF
C46	SM668016226	Cap tant 22UF/16V 20 % L Esr

Part #: 901586-00 Description: 2 GHz 5GS/s 4 Channel Acquisition Board

Location	Part Number	Description
C47	SM668016226	Cap tant 22UF/16V 20 % L Esr
C48	SM661207104	Cap Cera Chip 20 % .1 UF
C49	SM661207103	Cap Cera Chip 20% .01 UF
C50	SM661207104	Cap Cera Chip 20 % .1 UF
C51	SM661207104	Cap Cera Chip 20 % .1 UF
C52	SM662151001	Cap Cera Chip 10% 16V 0.1 UF
C53	SM662151001	Cap Cera Chip 10% 16V 0.1 UF
C54	SM662151001	Cap Cera Chip 10% 16V 0.1 UF
C55	SM662151001	Cap Cera Chip 10% 16V 0.1 UF
C56	SM662151001	Cap Cera Chip 10% 16V 0.1 UF
C57	SM662151001	Cap Cera Chip 10% 16V 0.1 UF
C58	SM662151001	Cap Cera Chip 10% 16V 0.1 UF
C59	SM662151001	Cap Cera Chip 10% 16V 0.1 UF
C60	SM662151001	Cap Cera Chip 10% 16V 0.1 UF
C61	SM662151001	Cap Cera Chip 10% 16V 0.1 UF
C62	SM662151001	Cap Cera Chip 10% 16V 0.1 UF
C63	SM662151001	Cap Cera Chip 10% 16V 0.1 UF
C64	SM668016226	Cap tant 22UF/16V 20 % L Esr
C65	SM662151001	Cap Cera Chip 10% 16V 0.1 UF
C66	SM662151001	Cap Cera Chip 10% 16V 0.1 UF
C67	SM668016226	Cap tant 22UF/16V 20 % L Esr
C68	SM668025106	Cap,tant 10UF/25V 20% L Esr
C69	SM661207104	Cap Cera Chip 20 % .1 UF
C70	SM661207104	Cap Cera Chip 20 % .1 UF
C71	SM661207104	Cap Cera Chip 20 % .1 UF
C72	SM661165102	Cap Cera Chip 1000PF
C73	SM661207103	Cap Cera Chip 20% .01 UF
C74	SM661255121	Cap Cera Chip 5% 120 PF
C75	SM661165102	Cap Cera Chip 1000PF
C76	SM661255121	Cap Cera Chip 5% 120 PF
C77	SM661207104	Cap Cera Chip 20 % .1 UF
C78	SM661207104	Cap Cera Chip 20 % .1 UF
C79	SM661207104	Cap Cera Chip 20 % .1 UF
C80	SM661207104	Cap Cera Chip 20 % .1 UF
C81	SM661207104	Cap Cera Chip 20 % .1 UF
C82	SM661207104	Cap Cera Chip 20 % .1 UF
C83	SM661207104	Cap Cera Chip 20 % .1 UF
C84	SM661207104	Cap Cera Chip 20 % .1 UF
C85	SM661207104	Cap Cera Chip 20 % .1 UF
C86	SM661207104	Cap Cera Chip 20 % .1 UF
C87	SM661207104	Cap Cera Chip 20 % .1 UF
C88	SM661207104	Cap Cera Chip 20 % .1 UF
C89	SM661207104	Cap Cera Chip 20 % .1 UF
C90	SM661207104	Cap Cera Chip 20 % .1 UF

Part #: 901586-00 Description: 2 GHz 5GS/s 4 Channel Acquisition Board

Location	Part Number	Description
C91	SM661207104	Cap Cera Chip 20 % .1 UF
C92	SM661207103	Cap Cera Chip 20% .01 UF
C93	SM661066102	Cap Cera Chip 10% 1000PF/50V
C94	SM661066102	Cap Cera Chip 10% 1000PF/50V
C95	SM661207104	Cap Cera Chip 20 % .1 UF
C96	SM661207104	Cap Cera Chip 20 % .1 UF
C97	SM661207104	Cap Cera Chip 20 % .1 UF
C98	SM661207104	Cap Cera Chip 20 % .1 UF
C99	SM661207104	Cap Cera Chip 20 % .1 UF
C100	SM661207104	Cap Cera Chip 20 % .1 UF
C101	SM668016226	Cap tant 22UF/16V 20 % L Esr
C102	SM668016226	Cap tant 22UF/16V 20 % L Esr
C103	SM661207104	Cap Cera Chip 20 % .1 UF
C104	SM661207104	Cap Cera Chip 20 % .1 UF
C105	SM668016226	Cap tant 22UF/16V 20 % L Esr
C106	SM668016226	Cap tant 22UF/16V 20 % L Esr
C107	SM661207104	Cap Cera Chip 20 % .1 UF
C108	SM661207104	Cap Cera Chip 20 % .1 UF
C109	SM668016226	Cap tant 22UF/16V 20 % L Esr
C110	SM661207103	Cap Cera Chip 20% .01 UF
C111	SM661207103	Cap Cera Chip 20% .01 UF
C112	SM661207104	Cap Cera Chip 20 % .1 UF
C113	SM661207104	Cap Cera Chip 20 % .1 UF
C114	SM668016226	Cap tant 22UF/16V 20 % L Esr
C115	SM662151001	Cap Cera Chip 10% 16V 0.1 UF
C116	SM662151001	Cap Cera Chip 10% 16V 0.1 UF
C117	SM662151001	Cap Cera Chip 10% 16V 0.1 UF
C118	SM662151001	Cap Cera Chip 10% 16V 0.1 UF
C119	SM662151001	Cap Cera Chip 10% 16V 0.1 UF
C120	SM662151001	Cap Cera Chip 10% 16V 0.1 UF
C121	SM662151001	Cap Cera Chip 10% 16V 0.1 UF
C122	SM662151001	Cap Cera Chip 10% 16V 0.1 UF
C123	SM662151001	Cap Cera Chip 10% 16V 0.1 UF
C124	SM662151001	Cap Cera Chip 10% 16V 0.1 UF
C125	SM661207104	Cap Cera Chip 20 % .1 UF
C126	SM661207104	Cap Cera Chip 20 % .1 UF
C127	SM661207104	Cap Cera Chip 20 % .1 UF
C128	SM661207104	Cap Cera Chip 20 % .1 UF
C129	SM661207104	Cap Cera Chip 20 % .1 UF
C130	SM661207104	Cap Cera Chip 20 % .1 UF
C133	SM661207104	Cap Cera Chip 20 % .1 UF
C134	SM661207104	Cap Cera Chip 20 % .1 UF
C135	SM661207104	Cap Cera Chip 20 % .1 UF
C136	SM668016226	Cap tant 22UF/16V 20 % L Esr

Part #: 901586-00 Description: 2 GHz 5GS/s 4 Channel Acquisition Board

Location	Part Number	Description
C137	SM668016226	Cap tant 22UF/16V 20 % L Esr
C138	SM668016226	Cap tant 22UF/16V 20 % L Esr
C139	SM662151001	Cap Cera Chip 10% 16V 0.1 UF
C140	SM662151001	Cap Cera Chip 10% 16V 0.1 UF
C141	SM661207104	Cap Cera Chip 20 % .1 UF
C142	SM668025106	Cap,tant 10UF/25V 20% L Esr
C143	SM662151001	Cap Cera Chip 10% 16V 0.1 UF
C144	SM662151001	Cap Cera Chip 10% 16V 0.1 UF
C145	SM662151001	Cap Cera Chip 10% 16V 0.1 UF
C146	SM662151001	Cap Cera Chip 10% 16V 0.1 UF
C147	SM662151001	Cap Cera Chip 10% 16V 0.1 UF
C148	SM662151001	Cap Cera Chip 10% 16V 0.1 UF
C149	SM662151001	Cap Cera Chip 10% 16V 0.1 UF
C150	SM662151001	Cap Cera Chip 10% 16V 0.1 UF
C151	SM662151001	Cap Cera Chip 10% 16V 0.1 UF
C152	SM661207104	Cap Cera Chip 20 % .1 UF
C153	SM661207104	Cap Cera Chip 20 % .1 UF
C154	SM661207104	Cap Cera Chip 20 % .1 UF
C155	SM661207104	Cap Cera Chip 20 % .1 UF
C156	SM661207104	Cap Cera Chip 20 % .1 UF
C157	SM652061273	Res Chip 1% 27K Ohm .063W
C158	SM661207104	Cap Cera Chip 20 % .1 UF
C159	SM661207104	Cap Cera Chip 20 % .1 UF
C160	SM668025106	Cap,tant 10UF/25V 20% L Esr
C161	SM661207104	Cap Cera Chip 20 % .1 UF
C162	SM668025106	Cap,tant 10UF/25V 20% L Esr
C163	SM661207104	Cap Cera Chip 20 % .1 UF
C164	SM661207104	Cap Cera Chip 20 % .1 UF
C165	SM661207104	Cap Cera Chip 20 % .1 UF
C166	SM661207104	Cap Cera Chip 20 % .1 UF
C167	SM661207104	Cap Cera Chip 20 % .1 UF
C168	SM661207104	Cap Cera Chip 20 % .1 UF
C169	SM668016226	Cap tant 22UF/16V 20 % L Esr
C170	SM668016226	Cap tant 22UF/16V 20 % L Esr
C171	SM661207104	Cap Cera Chip 20 % .1 UF
C172	SM661207104	Cap Cera Chip 20 % .1 UF
C173	SM661207104	Cap Cera Chip 20 % .1 UF
C174	SM666267227	Cap Tant 220UF 10V 20%
C175	SM661068104	Cap Cera Chip 0.1uF 0603
C176	SM661207104	Cap Cera Chip 20 % .1 UF
C177	SM666267227	Cap Tant 220UF 10V 20%
C178	SM661207104	Cap Cera Chip 20 % .1 UF
C179	SM661207104	Cap Cera Chip 20 % .1 UF
C180	SM668016226	Cap tant 22UF/16V 20 % L Esr

Part #: 901586-00 Description: 2 GHz 5GS/s 4 Channel Acquisition Board

Location	Part Number	Description
C181	SM668016226	Cap tant 22UF/16V 20 % L Esr
C182	SM668016226	Cap tant 22UF/16V 20 % L Esr
C183	SM666267227	Cap Tant 220UF 10V 20%
C184	SM661207104	Cap Cera Chip 20 % .1 UF
C185	SM661207104	Cap Cera Chip 20 % .1 UF
C186	SM661207104	Cap Cera Chip 20 % .1 UF
C187	SM661207104	Cap Cera Chip 20 % .1 UF
C188	SM661207104	Cap Cera Chip 20 % .1 UF
C189	SM661207104	Cap Cera Chip 20 % .1 UF
C190	SM661207104	Cap Cera Chip 20 % .1 UF
C191	SM668016226	Cap tant 22UF/16V 20 % L Esr
C192	SM666267227	Cap Tant 220UF 10V 20%
C193	SM666267227	Cap Tant 220UF 10V 20%
C194	SM666267227	Cap Tant 220UF 10V 20%
C195	SM661207104	Cap Cera Chip 20 % .1 UF
C196	SM666267227	Cap Tant 220UF 10V 20%
C197	SM661207104	Cap Cera Chip 20 % .1 UF
C198	SM661207104	Cap Cera Chip 20 % .1 UF
C199	SM661207104	Cap Cera Chip 20 % .1 UF
C200	SM668016226	Cap tant 22UF/16V 20 % L Esr
C201	SM668016226	Cap tant 22UF/16V 20 % L Esr
C202	SM661207104	Cap Cera Chip 20 % .1 UF
C203	SM661207104	Cap Cera Chip 20 % .1 UF
C204	SM661207104	Cap Cera Chip 20 % .1 UF
C205	SM661207104	Cap Cera Chip 20 % .1 UF
C206	SM661207104	Cap Cera Chip 20 % .1 UF
C207	SM661207104	Cap Cera Chip 20 % .1 UF
C208	SM666267227	Cap Tant 220UF 10V 20%
C209	SM668016226	Cap tant 22UF/16V 20 % L Esr
C210	SM666267227	Cap Tant 220UF 10V 20%
C211	SM668016226	Cap tant 22UF/16V 20 % L Esr
C212	SM661207104	Cap Cera Chip 20 % .1 UF
C213	SM668016226	Cap tant 22UF/16V 20 % L Esr
C214	SM661207104	Cap Cera Chip 20 % .1 UF
C215	SM661207104	Cap Cera Chip 20 % .1 UF
C216	SM661207104	Cap Cera Chip 20 % .1 UF
C217	SM661207104	Cap Cera Chip 20 % .1 UF
C218	SM661207104	Cap Cera Chip 20 % .1 UF
C219	SM661207104	Cap Cera Chip 20 % .1 UF
C220	SM661207104	Cap Cera Chip 20 % .1 UF
C221	SM661207104	Cap Cera Chip 20 % .1 UF
C223	SM661207104	Cap Cera Chip 20 % .1 UF
C224	SM661207104	Cap Cera Chip 20 % .1 UF
C225	SM661207104	Cap Cera Chip 20 % .1 UF

Part #: 901586-00 Description: 2 GHz 5GS/s 4 Channel Acquisition Board

Location	Part Number	Description
C226	SM661207104	Cap Cera Chip 20 % .1 UF
C227	SM661207104	Cap Cera Chip 20 % .1 UF
C228	SM661207104	Cap Cera Chip 20 % .1 UF
C229	SM661207104	Cap Cera Chip 20 % .1 UF
C230	SM661207104	Cap Cera Chip 20 % .1 UF
C231	SM661207104	Cap Cera Chip 20 % .1 UF
C232	SM661207104	Cap Cera Chip 20 % .1 UF
C233	SM661207104	Cap Cera Chip 20 % .1 UF
C234	SM661207104	Cap Cera Chip 20 % .1 UF
C235	SM661207104	Cap Cera Chip 20 % .1 UF
C236	SM661207104	Cap Cera Chip 20 % .1 UF
C237	SM661207104	Cap Cera Chip 20 % .1 UF
C238	SM661207104	Cap Cera Chip 20 % .1 UF
C239	SM661207104	Cap Cera Chip 20 % .1 UF
C240	SM661207104	Cap Cera Chip 20 % .1 UF
C241	SM661207104	Cap Cera Chip 20 % .1 UF
C242	SM661207104	Cap Cera Chip 20 % .1 UF
C243	SM661207104	Cap Cera Chip 20 % .1 UF
C244	SM661207104	Cap Cera Chip 20 % .1 UF
C245	SM661068104	Cap Cera Chip 0.1uF 0603
C246	SM661207104	Cap Cera Chip 20 % .1 UF
C247	SM668016226	Cap tant 22UF/16V 20 % L Esr
C248	SM661207104	Cap Cera Chip 20 % .1 UF
C249	SM661207104	Cap Cera Chip 20 % .1 UF
C250	SM668016226	Cap tant 22UF/16V 20 % L Esr
C251	SM661207104	Cap Cera Chip 20 % .1 UF
C252	SM661207104	Cap Cera Chip 20 % .1 UF
C253	SM661207104	Cap Cera Chip 20 % .1 UF
C254	SM661207104	Cap Cera Chip 20 % .1 UF
C255	SM661207104	Cap Cera Chip 20 % .1 UF
C256	SM661207104	Cap Cera Chip 20 % .1 UF
C257	SM652041011	Res Chip 1% 49.9 Ohms
C258	SM652041011	Res Chip 1% 49.9 Ohms
C259	SM652041011	Res Chip 1% 49.9 Ohms
C260	SM652041011	Res Chip 1% 49.9 Ohms
C262	SM661207104	Cap Cera Chip 20 % .1 UF
C263	SM661207104	Cap Cera Chip 20 % .1 UF
C264	SM661068104	Cap Cera Chip 0.1uF 0603
C265	SM661207104	Cap Cera Chip 20 % .1 UF
C266	SM661207104	Cap Cera Chip 20 % .1 UF
C267	SM661207104	Cap Cera Chip 20 % .1 UF
C268	SM661207104	Cap Cera Chip 20 % .1 UF
C269	SM661207104	Cap Cera Chip 20 % .1 UF
C270	SM661207104	Cap Cera Chip 20 % .1 UF

Part #: 901586-00 Description: 2 GHz 5GS/s 4 Channel Acquisition Board

Location	Part Number	Description
C271	SM661207104	Cap Cera Chip 20 % .1 UF
C272	SM661207104	Cap Cera Chip 20 % .1 UF
C273	SM661207104	Cap Cera Chip 20 % .1 UF
C274	SM666267227	Cap Tant 220UF 10V 20%
C275	SM668016226	Cap tant 22UF/16V 20 % L Esr
C276	SM661207104	Cap Cera Chip 20 % .1 UF
C277	SM668016226	Cap tant 22UF/16V 20 % L Esr
C278	SM666267227	Cap Tant 220UF 10V 20%
C279	SM661207104	Cap Cera Chip 20 % .1 UF
C280	SM661207104	Cap Cera Chip 20 % .1 UF
C281	SM661207104	Cap Cera Chip 20 % .1 UF
C282	SM661207104	Cap Cera Chip 20 % .1 UF
C283	SM661207104	Cap Cera Chip 20 % .1 UF
C284	SM661207104	Cap Cera Chip 20 % .1 UF
C285	SM661207104	Cap Cera Chip 20 % .1 UF
C286	SM661207104	Cap Cera Chip 20 % .1 UF
C287	SM661068104	Cap Cera Chip 0.1uF 0603
C288	SM661207104	Cap Cera Chip 20 % .1 UF
C289	SM661068104	Cap Cera Chip 0.1uF 0603
C290	SM661207104	Cap Cera Chip 20 % .1 UF
C291	SM661207104	Cap Cera Chip 20 % .1 UF
C292	SM668016226	Cap tant 22UF/16V 20 % L Esr
C293	SM668016226	Cap tant 22UF/16V 20 % L Esr
C294	SM668016226	Cap tant 22UF/16V 20 % L Esr
C295	SM668016226	Cap tant 22UF/16V 20 % L Esr
C296	SM661207104	Cap Cera Chip 20 % .1 UF
C297	SM661207104	Cap Cera Chip 20 % .1 UF
C298	SM668016226	Cap tant 22UF/16V 20 % L Esr
C299	SM661207104	Cap Cera Chip 20 % .1 UF
C300	SM666267227	Cap Tant 220UF 10V 20%
C301	SM666267227	Cap Tant 220UF 10V 20%
C302	SM661207104	Cap Cera Chip 20 % .1 UF
C303	SM668016226	Cap tant 22UF/16V 20 % L Esr
C304	SM661066102	Cap Cera Chip 10% 1000PF/50V
C305	SM661066102	Cap Cera Chip 10% 1000PF/50V
C306	SM661207104	Cap Cera Chip 20 % .1 UF
C307	SM661207104	Cap Cera Chip 20 % .1 UF
C308	SM668016226	Cap tant 22UF/16V 20 % L Esr
C309	SM668016226	Cap tant 22UF/16V 20 % L Esr
C310	SM666267227	Cap Tant 220UF 10V 20%
C311	SM661207104	Cap Cera Chip 20 % .1 UF
C312	SM668016226	Cap tant 22UF/16V 20 % L Esr
C313	SM668025106	Cap,tant 10UF/25V 20% L Esr
C314	SM661207104	Cap Cera Chip 20 % .1 UF

Part #: 901586-00 Description: 2 GHz 5GS/s 4 Channel Acquisition Board

Location	Part Number	Description
C315	SM668016226	Cap tant 22UF/16V 20 % L Esr
C316	SM661066102	Cap Cera Chip 10% 1000PF/50V
C317	SM661207104	Cap Cera Chip 20 % .1 UF
C318	SM668016226	Cap tant 22UF/16V 20 % L Esr
C319	SM668016226	Cap tant 22UF/16V 20 % L Esr
C320	SM661207104	Cap Cera Chip 20 % .1 UF
C321	SM661207104	Cap Cera Chip 20 % .1 UF
C322	SM668025106	Cap,tant 10UF/25V 20% L Esr
C323	SM668025106	Cap,tant 10UF/25V 20% L Esr
C324	SM661207104	Cap Cera Chip 20 % .1 UF
C325	SM668025106	Cap,tant 10UF/25V 20% L Esr
C326	SM661207104	Cap Cera Chip 20 % .1 UF
C327	SM661207104	Cap Cera Chip 20 % .1 UF
C328	SM668025106	Cap,tant 10UF/25V 20% L Esr
C329	SM668025106	Cap,tant 10UF/25V 20% L Esr
C330	SM661207104	Cap Cera Chip 20 % .1 UF
C331	SM668016226	Cap tant 22UF/16V 20 % L Esr
C332	SM661010002	Cap Cera Chip 27PF +/- 5%
C333	SM655020002	RES CHIP 1% 174 OHMS
C334	SM652041200	Res 20 Ohms +/-1% 1/16W 0402 S
C335	SM652041200	Res 20 Ohms +/-1% 1/16W 0402 S
C336	SM655020002	RES CHIP 1% 174 OHMS
C337	SM661010002	Cap Cera Chip 27PF +/- 5%
C338	SM652041200	Res 20 Ohms +/-1% 1/16W 0402 S
C339	SM655020002	RES CHIP 1% 174 OHMS
C340	SM661010002	Cap Cera Chip 27PF +/- 5%
C341	SM661010002	Cap Cera Chip 27PF +/- 5%
C342	SM655020002	RES CHIP 1% 174 OHMS
C343	SM652041200	Res 20 Ohms +/-1% 1/16W 0402 S
C344	SM661010002	Cap Cera Chip 27PF +/- 5%
C345	SM655020002	RES CHIP 1% 174 OHMS
C346	SM652041200	Res 20 Ohms +/-1% 1/16W 0402 S
C347	SM661010002	Cap Cera Chip 27PF +/- 5%
C348	SM655020002	RES CHIP 1% 174 OHMS
C349	SM652041200	Res 20 Ohms +/-1% 1/16W 0402 S
C350	SM661010002	Cap Cera Chip 27PF +/- 5%
C351	SM655020002	RES CHIP 1% 174 OHMS
C352	SM652041200	Res 20 Ohms +/-1% 1/16W 0402 S
C353	SM661010002	Cap Cera Chip 27PF +/- 5%
C354	SM655020002	RES CHIP 1% 174 OHMS
C355	SM652041200	Res 20 Ohms +/-1% 1/16W 0402 S
C356	SM652041200	Res 20 Ohms +/-1% 1/16W 0402 S
C357	SM655020002	RES CHIP 1% 174 OHMS
C358	SM661010002	Cap Cera Chip 27PF +/- 5%

Part #: 901586-00 Description: 2 GHz 5GS/s 4 Channel Acquisition Board

Location	Part Number	Description
C359	SM661010002	Cap Cera Chip 27PF +/- 5%
C360	SM655020002	RES CHIP 1% 174 OHMS
C361	SM652041200	Res 20 Ohms +/-1% 1/16W 0402 S
C362	SM661207104	Cap Cera Chip 20 % .1 UF
C363	SM668016226	Cap tant 22UF/16V 20 % L Esr
C364	SM661207104	Cap Cera Chip 20 % .1 UF
C365	SM661207104	Cap Cera Chip 20 % .1 UF
C366	SM661207104	Cap Cera Chip 20 % .1 UF
C367	SM661207104	Cap Cera Chip 20 % .1 UF
C368	SM668016226	Cap tant 22UF/16V 20 % L Esr
C369	SM661207104	Cap Cera Chip 20 % .1 UF
C370	SM661207104	Cap Cera Chip 20 % .1 UF
C371	SM661207104	Cap Cera Chip 20 % .1 UF
C372	SM661207104	Cap Cera Chip 20 % .1 UF
C373	SM661207104	Cap Cera Chip 20 % .1 UF
C374	SM668016226	Cap tant 22UF/16V 20 % L Esr
C375	SM668016226	Cap tant 22UF/16V 20 % L Esr
C376	SM661207104	Cap Cera Chip 20 % .1 UF
C377	SM661207104	Cap Cera Chip 20 % .1 UF
C378	SM661207104	Cap Cera Chip 20 % .1 UF
C379	SM661255121	Cap Cera Chip 5% 120 PF
C380	SM661207104	Cap Cera Chip 20 % .1 UF
C381	SM661207104	Cap Cera Chip 20 % .1 UF
C382	SM661207104	Cap Cera Chip 20 % .1 UF
C383	SM661028100	Cap Cera Chip 1UF 10V
C384	SM661207104	Cap Cera Chip 20 % .1 UF
C407	SM661207104	Cap Cera Chip 20 % .1 UF
C410	SM661207104	Cap Cera Chip 20 % .1 UF
C411	SM661207104	Cap Cera Chip 20 % .1 UF
C414	SM661207104	Cap Cera Chip 20 % .1 UF
C415	SM661207104	Cap Cera Chip 20 % .1 UF
C418	SM661207104	Cap Cera Chip 20 % .1 UF
C419	SM661207104	Cap Cera Chip 20 % .1 UF
C422	SM661207104	Cap Cera Chip 20 % .1 UF
C426	SM661207104	Cap Cera Chip 20 % .1 UF
C436	SM661207104	Cap Cera Chip 20 % .1 UF
C437	SM661207104	Cap Cera Chip 20 % .1 UF
C438	SM661207104	Cap Cera Chip 20 % .1 UF
C929	SM661207104	Cap Cera Chip 20 % .1 UF
C980	SM661207104	Cap Cera Chip 20 % .1 UF
C989	SM661207104	Cap Cera Chip 20 % .1 UF
CH1_A1	901140-00	Chip Atten. 3dB .5% Trim Res
CH1_C1	SM668010335	Cap,tant 3.3UF/10V 20% L/Esr
CH1_C4	SM661540056	Cap Cera Chip 5.6PF 500V

Part #: 901586-00 Description: 2 GHz 5GS/s 4 Channel Acquisition Board

Location	Part Number	Description
CH1_C6	SM661066102	Cap Cera Chip 10% 1000PF/50V
CH1_C7	SM662212001	Cap Cera .015uF 10% 25V X7R
CH1_C9	SM661068104	Cap Cera Chip 0.1uF 0603
CH1_C10	SM661066102	Cap Cera Chip 10% 1000PF/50V
CH1_C11	SM661066102	Cap Cera Chip 10% 1000PF/50V
CH1_C12	SM661068104	Cap Cera Chip 0.1uF 0603
CH1_C13	SM661068104	Cap Cera Chip 0.1uF 0603
CH1_C14	SM661068104	Cap Cera Chip 0.1uF 0603
CH1_C15	SM661068104	Cap Cera Chip 0.1uF 0603
CH1_C16	SM661068104	Cap Cera Chip 0.1uF 0603
CH1_C17	SM661028100	Cap Cera Chip 1UF 10V
CH1_C18	SM661068104	Cap Cera Chip 0.1uF 0603
CH1_C19	SM661066102	Cap Cera Chip 10% 1000PF/50V
CH1_C21	SM661066102	Cap Cera Chip 10% 1000PF/50V
CH1_C22	SM661207223	Cap Cera Chip 20% .022 UF
CH1_C23	SM661068104	Cap Cera Chip 0.1uF 0603
CH1_C24	SM662382001	Cap Cera 1000pF 10% 500V X7R
CH1_C25	SM158070200	Cap Variable 4.5-20.0 PF
CH1_C26	SM661540056	Cap Cera Chip 5.6PF 500V
CH1_C27	SM661066102	Cap Cera Chip 10% 1000PF/50V
CH1_C29	SM661066102	Cap Cera Chip 10% 1000PF/50V
CH1_C30	SM661066102	Cap Cera Chip 10% 1000PF/50V
CH1_C31	SM662241001	Cap Cera 22pF +/- 5% 100V Npo
CH1_C32	SM661073068	Cap Cera 6.8+/- 0.1PF 50V Npo
CH1_C33	SM661066102	Cap Cera Chip 10% 1000PF/50V
CH1_C34	SM668025334	Cap,tant .33UF/25V 20% L/Esr
CH1_C35	SM661068104	Cap Cera Chip 0.1uF 0603
CH1_C36	SM661068104	Cap Cera Chip 0.1uF 0603
CH1_C37	SM661066102	Cap Cera Chip 10% 1000PF/50V
CH1_C39	SM661068104	Cap Cera Chip 0.1uF 0603
CH1_C40	SM661068104	Cap Cera Chip 0.1uF 0603
CH1_C41	SM661068104	Cap Cera Chip 0.1uF 0603
CH1_C45	SM662131003	Cap Cera Chip 5% 50V .01 UF
CH1_C46	SM662131003	Cap Cera Chip 5% 50V .01 UF
CH1_C47	SM662131003	Cap Cera Chip 5% 50V .01 UF
CH1_C48	SM662131003	Cap Cera Chip 5% 50V .01 UF
CH1_C49	SM662131003	Cap Cera Chip 5% 50V .01 UF
CH1_C50	SM662131003	Cap Cera Chip 5% 50V .01 UF
CH1_C51	SM661068104	Cap Cera Chip 0.1uF 0603
CH1_C53	SM661068104	Cap Cera Chip 0.1uF 0603
CH1_C54	SM661068104	Cap Cera Chip 0.1uF 0603
CH1_C55	SM661066102	Cap Cera Chip 10% 1000PF/50V
CH1_C56	SM661066102	Cap Cera Chip 10% 1000PF/50V
CH1_C57	SM661068104	Cap Cera Chip 0.1uF 0603

Part #: 901586-00 Description: 2 GHz 5GS/s 4 Channel Acquisition Board

Location	Part Number	Description
CH1_C59	SM158070200	Cap Variable 4.5-20.0 PF
CH1_C60	SM661540056	Cap Cera Chip 5.6PF 500V
CH1_C61	SM661066102	Cap Cera Chip 10% 1000PF/50V
CH1_C62	SM661028100	Cap Cera Chip 1UF 10V
CH1_C63	SM661028100	Cap Cera Chip 1UF 10V
CH1_C64	SM661068104	Cap Cera Chip 0.1uF 0603
CH1_C65	SM661066102	Cap Cera Chip 10% 1000PF/50V
CH1_C66	SM661066102	Cap Cera Chip 10% 1000PF/50V
CH1_C67	SM661068104	Cap Cera Chip 0.1uF 0603
CH1_C68	SM661068104	Cap Cera Chip 0.1uF 0603
CH1_C69	SM661068104	Cap Cera Chip 0.1uF 0603
CH1_C70	SM661068104	Cap Cera Chip 0.1uF 0603
CH1_C71	SM661068104	Cap Cera Chip 0.1uF 0603
CH1_C73	SM661068104	Cap Cera Chip 0.1uF 0603
CH1_C74	SM661207104	Cap Cera Chip 20 % .1 UF
CH1_C75	SM662131003	Cap Cera Chip 5% 50V .01 UF
CH1_C76	SM661066102	Cap Cera Chip 10% 1000PF/50V
CH1_C77	SM662152001	Cap Cera Chip 10% 16V 100nF
CH1_C81	SM662152001	Cap Cera Chip 10% 16V 100nF
CH1_C82	SM662152001	Cap Cera Chip 10% 16V 100nF
CH1_C83	SM662152001	Cap Cera Chip 10% 16V 100nF
CH1_C85	SM158011000	Cap Variable .5PF-1.3PF Npo CE
CH1_C88	SM661073300	Cap Cera 30PF+/- 5% 50V Npo
CH1_C89	SM661073068	Cap Cera 6.8+/- 0.1PF 50V Npo
CH1_C90	SM661066102	Cap Cera Chip 10% 1000PF/50V
CH1_C91	SM661066102	Cap Cera Chip 10% 1000PF/50V
CH1_C92	SM158011000	Cap Variable .5PF-1.3PF Npo CE
CH1_C95	SM662131003	Cap Cera Chip 5% 50V .01 UF
CH1_C96	SM668025334	Cap,tant .33UF/25V 20% L/Esr
CH1_C97	SM668010335	Cap,tant 3.3UF/10V 20% L/Esr
CH1_C98	SM668010335	Cap,tant 3.3UF/10V 20% L/Esr
CH1_C102	SM661068104	Cap Cera Chip 0.1uF 0603
CH1_C103	SM662252001	Cap Cera .068uF 10% 16V X7R
CH1_C104	SM652061912	Res Chip 1% 9.1K Ohm .063W
CH1_C107	SM661068104	Cap Cera Chip 0.1uF 0603
CH1_C200	SM661068104	Cap Cera Chip 0.1uF 0603
CH1_CR1	SM232442828	Diode Bridge HSMS2828
CH1_CR2	SM229020150	MLC Trans Volt Suppressor
CH1_CR3	SM252023304	Dual Pin Diode Silicon Bar 63-
CH1_CR4	SM252005303	Pin Diode Bar 63-03W
CH1_CR5	SM252005303	Pin Diode Bar 63-03W
CH1_CR6	SM252023066	Pin Diode Bar 66
CH1_CR7	SM252023066	Pin Diode Bar 66
CH1_CR8	SM252023066	Pin Diode Bar 66

Part #: 901586-00 Description: 2 GHz 5GS/s 4 Channel Acquisition Board

Location	Part Number	Description
CH1_CR10	SM236030099	Diode SO-Pkg BAV99
CH1_CR11	SM232030001	Diode Array Schottky HSMS-282C
CH1_CR12	SM232030001	Diode Array Schottky HSMS-282C
CH1_CR13	SM252023066	Pin Diode Bar 66
CH1_J3A	7093XXP01	Right Angle Recept. Connector
CH1_J3B	709614300	Bulkhead Receptical Female Bnc
CH1_L1	SM301004001	Bead Ferrite 50 Ohms 3AMPS 120
CH1_L2	SM301004001	Bead Ferrite 50 Ohms 3AMPS 120
CH1_L3	SM301004001	Bead Ferrite 50 Ohms 3AMPS 120
CH1_L4	SM301004001	Bead Ferrite 50 Ohms 3AMPS 120
CH1_L18	SM301004001	Bead Ferrite 50 Ohms 3AMPS 120
CH1_L20	SM301004001	Bead Ferrite 50 Ohms 3AMPS 120
CH1_L28	SM301004001	Bead Ferrite 50 Ohms 3AMPS 120
CH1_L29	SM301004001	Bead Ferrite 50 Ohms 3AMPS 120
CH1_L30	SM652041000	Res Zero ohms
CH1_L31	SM652041000	Res Zero ohms
CH1_L32	SM652041000	Res Zero ohms
CH1_L33	SM652041000	Res Zero ohms
CH1_L34	SM652041000	Res Zero ohms
CH1_L35	SM652041000	Res Zero ohms
CH1_Q1	SM270050520	NPN 9GHZ Wideband Transistor
CH1_Q2	SM270050520	NPN 9GHZ Wideband Transistor
CH1_Q9	SM270050520	NPN 9GHZ Wideband Transistor
CH1_Q10	SM275030550	Transistor Pnp BF550
CH1_Q11	SM280122416	Trans. Jfet N MMBF4416/LC6A
CH1_R1	SM652061101	Res Chip 1% 100 Ohm .063W
CH1_R2	SM652061103	Res Chip 1% 10K Ohm .063W
CH1_R3	SM652061103	Res Chip 1% 10K Ohm .063W
CH1_R4	SM652061102	Res Chip 1% 1.0K Ohm .063W
CH1_R5	SM652061681	Res Chip 1% 681 Ohm .063W
CH1_R6	SM652061000	Res Chip 0 Ohm Jumper
CH1_R7	SM652061203	Res Chip 1% 20K Ohm .063W
CH1_R8	SM652061432	Res Chip 1% 4.3K Ohm .063W
CH1_R9	SM652061394	Res Chip 1% 390K Ohm .063W
CH1_R10	SM655040022	Res Chip .5% 50ppm 180K 150V
CH1_R15	SM652061222	Res Chip 1% 2.2K Ohm .063W
CH1_R16	SM652061332	Res Chip 1% 3.3K Ohm .063W
CH1_R17	SM652061101	Res Chip 1% 100 Ohm .063W
CH1_R18	SM655040024	Res Chip .5% 50ppm 300K 150V
CH1_R19	SM655040024	Res Chip .5% 50ppm 300K 150V
CH1_R20	SM655040023	Res Chip .5% 50ppm 240K 150V
CH1_R21	SM652061000	Res Chip 0 Ohm Jumper
CH1_R22	SM652061390	Res Chip 1% 39.0 Ohm .063W
CH1_R23	SM652061121	Res Chip 1% 120 Ohm .063W

Part #: 901586-00 Description: 2 GHz 5GS/s 4 Channel Acquisition Board

Location	Part Number	Description
CH1_R27	SM652061393	Res Chip 1% 39K Ohm .063W
CH1_R28	SM652041011	Res Chip 1% 49.9 Ohms
CH1_R29	SM652061393	Res Chip 1% 39K Ohm .063W
CH1_R30	SM652000005	Res RF 100 Ohm .25% 1/3W 1206
CH1_R31	SM652000005	Res RF 100 Ohm .25% 1/3W 1206
CH1_R32	SM652061103	Res Chip 1% 10K Ohm .063W
CH1_R33	SM652061103	Res Chip 1% 10K Ohm .063W
CH1_R34	SM655040024	Res Chip .5% 50ppm 300K 150V
CH1_R35	SM655040024	Res Chip .5% 50ppm 300K 150V
CH1_R36	SM652061273	Res Chip 1% 27K Ohm .063W
CH1_R37	SM652061273	Res Chip 1% 27K Ohm .063W
CH1_R38	SM185457503	Res Vari Cermet 50 K
CH1_R39	SM652061271	Res Chip 1% 270 Ohm .063W
CH1_R40	SM652061271	Res Chip 1% 270 Ohm .063W
CH1_R41	SM652061271	Res Chip 1% 270 Ohm .063W
CH1_R42	SM652061271	Res Chip 1% 270 Ohm .063W
CH1_R43	SM652061121	Res Chip 1% 120 Ohm .063W
CH1_R44	SM652061222	Res Chip 1% 2.2K Ohm .063W
CH1_R45	SM652061510	Res Chip 1% 51.0 Ohm .063W
CH1_R46	SM652061824	Res Chip 1% 820K Ohm .063W
CH1_R47	SM652061390	Res Chip 1% 39.0 Ohm .063W
CH1_R48	SM655040024	Res Chip .5% 50ppm 300K 150V
CH1_R49	SM652061161	Res Chip 1% 160 Ohm .063W
CH1_R50	SM652061161	Res Chip 1% 160 Ohm .063W
CH1_R51	SM652061161	Res Chip 1% 160 Ohm .063W
CH1_R52	SM652061102	Res Chip 1% 1.0K Ohm .063W
CH1_R53	SM652061154	Res Chip 1% 150K Ohm .063W
CH1_R54	SM652061201	Res Chip 1% 200 Ohm .063W
CH1_R55	SM655030042	Res Thk Film 1% 5.6M Ohm 1/16W
CH1_R56	SM652061240	Res Chip 1% 24.0 Ohm .063W
CH1_R57	SM652061101	Res Chip 1% 100 Ohm .063W
CH1_R59	SM652061361	Res Chip 1% 360 Ohm .063W
CH1_R60	SM652061393	Res Chip 1% 39K Ohm .063W
CH1_R61	SM655040025	Res Chip .5% 50ppm 110K 150V
CH1_R62	SM652061112	Res Chip 1% 1.1K Ohm .063W
CH1_R63	SM652061106	Res Chip 1% 10M Ohm .063W
CH1_R64	SM652061100	Res Chip 1% 10.0 Ohm .063W
CH1_R65	SM652061430	Res Chip 1% 43.2 Ohm .063W
CH1_R66	SM652061201	Res Chip 1% 200 Ohm .063W
CH1_R67	SM652061330	Res Chip 1% 33.0 Ohm .063W
CH1_R70	SM655040024	Res Chip .5% 50ppm 300K 150V
CH1_R71	SM655040024	Res Chip .5% 50ppm 300K 150V
CH1_R72	SM652061131	Res Chip 1% 130 Ohm .063W
CH1_R73	SM185457102	Res Vari Cermet 1 K

Part #: 901586-00 Description: 2 GHz 5GS/s 4 Channel Acquisition Board

Location	Part Number	Description
CH1_R76	SM661207104	Cap Cera Chip 20 % .1 UF
CH1_R81	SM652061510	Res Chip 1% 51.0 Ohm .063W
CH1_R82	SM655040024	Res Chip .5% 50ppm 300K 150V
CH1_R83	SM652061510	Res Chip 1% 51.0 Ohm .063W
CH1_R84	SM652061203	Res Chip 1% 20K Ohm .063W
CH1_R85	SM652061562	Res Chip 1% 5.6K Ohm .063W
CH1_R90	SM652061273	Res Chip 1% 27K Ohm .063W
CH1_R91	SM652061273	Res Chip 1% 27K Ohm .063W
CH1_R92	SM652061121	Res Chip 1% 120 Ohm .063W
CH1_R93	SM652061271	Res Chip 1% 270 Ohm .063W
CH1_R94	SM652061271	Res Chip 1% 270 Ohm .063W
CH1_R95	SM655040025	Res Chip .5% 50ppm 110K 150V
CH1_R96	SM652061390	Res Chip 1% 39.0 Ohm .063W
CH1_R97	SM652061390	Res Chip 1% 39.0 Ohm .063W
CH1_R98	SM652061390	Res Chip 1% 39.0 Ohm .063W
CH1_R99	SM652061361	Res Chip 1% 360 Ohm .063W
CH1_R100	SM652061510	Res Chip 1% 51.0 Ohm .063W
CH1_R101	SM652061510	Res Chip 1% 51.0 Ohm .063W
CH1_R103	SM652061112	Res Chip 1% 1.1K Ohm .063W
CH1_R104	SM655030040	Res Thk Film +/-1% 5.11 Ohm .1
CH1_R105	SM652061102	Res Chip 1% 1.0K Ohm .063W
CH1_R106	SM652061471	Res Chip 1% 470 Ohm .063W
CH1_R107	SM652061510	Res Chip 1% 51.0 Ohm .063W
CH1_R108	SM652061361	Res Chip 1% 360 Ohm .063W
CH1_R109	SM652061102	Res Chip 1% 1.0K Ohm .063W
CH1_R110	SM652061100	Res Chip 1% 10.0 Ohm .063W
CH1_R111	SM652061390	Res Chip 1% 39.0 Ohm .063W
CH1_R112	SM652061393	Res Chip 1% 39K Ohm .063W
CH1_R113	SM652061201	Res Chip 1% 200 Ohm .063W
CH1_R114	SM652061330	Res Chip 1% 33.0 Ohm .063W
CH1_R115	SM652061361	Res Chip 1% 360 Ohm .063W
CH1_R116	SM652061751	Res Chip 1% 750 Ohm .063W
CH1_R118	SM655020025	Res Thk Film 1% 2.74 Ohm 1/16W
CH1_R119	SM655020025	Res Thk Film 1% 2.74 Ohm 1/16W
CH1_R120	SM655020025	Res Thk Film 1% 2.74 Ohm 1/16W
CH1_R121	SM655020025	Res Thk Film 1% 2.74 Ohm 1/16W
CH1_R128	SM652061000	Res Chip 0 Ohm Jumper
CH1_R129	SM652061201	Res Chip 1% 200 Ohm .063W
CH1_R130	SM652061240	Res Chip 1% 24.0 Ohm .063W
CH1_R131	SM652061390	Res Chip 1% 39.0 Ohm .063W
CH1_R132	SM652061390	Res Chip 1% 39.0 Ohm .063W
CH1_R133	SM652061105	Res Chip 1% 1.0M Ohm .063W
CH1_R134	SM655020017	Res Thk Film 1% 1K Ohm 1/16W
CH1_R135	SM655020017	Res Thk Film 1% 1K Ohm 1/16W

Part #: 901586-00 Description: 2 GHz 5GS/s 4 Channel Acquisition Board

Location	Part Number	Description
CH1_R136	SM655020017	Res Thk Film 1% 1K Ohm 1/16W
CH1_R137	SM655020017	Res Thk Film 1% 1K Ohm 1/16W
CH1_R138	SM655020017	Res Thk Film 1% 1K Ohm 1/16W
CH1_R139	SM655020017	Res Thk Film 1% 1K Ohm 1/16W
CH1_R141	SM655030040	Res Thk Film +/-1% 5.11 Ohm .1
CH1_R142	SM652061512	Res Chip 1% 5.1K Ohm .063W
CH1_R200	SM652061121	Res Chip 1% 120 Ohm .063W
CH1_RL1	SM430530001	Relay Smd Dual Form C 5V
CH1_RL2	SM430530001	Relay Smd Dual Form C 5V
CH1_RL3	430500003	20DB Attenuator Relay DC-3GHZ
CH1_RL4	SM430530001	Relay Smd Dual Form C 5V
CH1_RL7	SM431030005	Relay SPDT HF 50 Ohm 4.5V
CH1_RL8	SM430530001	Relay Smd Dual Form C 5V
CH1_U1	HFE653B	Front End Amplifier
CH1_U5	SM207231654	IC Dual 14-Bit Serial Dac
CH1_U6	SM289772003	Transistor Array 2003
CH1_U8	SM207770442	IC Analog Switch DG442
CH1_U9	SM208470705	IC OP Amp Picoamp Input AD705
CH1_U10	SM208450686	IC Wideband OP Amp OPA686
CH1_U12	SM208472022	Opamp, Dual, Low Pwr TLE2022C
CH1_U13	SM205616001	IC 8-Bit Shift Reg 74LV594ADR
CH1_U14	SM208475460	IC OP Amp Sin-Sup RtoR Ins Amp
CH1_U15	SM208470705	IC OP Amp Picoamp Input AD705
CH1_U50	SM208701023	IC Temperature Sensor
CH1_U51	SM208701023	IC Temperature Sensor
CH1_U81	901686-00	Lower front end EMI shield
CH1_U82	901685-00	Upper front end EMI shield
CH2_A1	901140-00	Chip Atten. 3dB .5% Trim Res
CH2_C1	SM668010335	Cap,tant 3.3UF/10V 20% L/Esr
CH2_C4	SM661540056	Cap Cera Chip 5.6PF 500V
CH2_C6	SM661066102	Cap Cera Chip 10% 1000PF/50V
CH2_C7	SM662212001	Cap Cera .015uF 10% 25V X7R
CH2_C9	SM661068104	Cap Cera Chip 0.1uF 0603
CH2_C10	SM661066102	Cap Cera Chip 10% 1000PF/50V
CH2_C11	SM661066102	Cap Cera Chip 10% 1000PF/50V
CH2_C12	SM661068104	Cap Cera Chip 0.1uF 0603
CH2_C13	SM661068104	Cap Cera Chip 0.1uF 0603
CH2_C14	SM661068104	Cap Cera Chip 0.1uF 0603
CH2_C15	SM661068104	Cap Cera Chip 0.1uF 0603
CH2_C16	SM661068104	Cap Cera Chip 0.1uF 0603
CH2_C17	SM661028100	Cap Cera Chip 1UF 10V
CH2_C18	SM661068104	Cap Cera Chip 0.1uF 0603
CH2_C19	SM661066102	Cap Cera Chip 10% 1000PF/50V
CH2_C21	SM661066102	Cap Cera Chip 10% 1000PF/50V

Part #: 901586-00 Description: 2 GHz 5GS/s 4 Channel Acquisition Board

Location	Part Number	Description
CH2_C22	SM661207223	Cap Cera Chip 20% .022 UF
CH2_C23	SM661068104	Cap Cera Chip 0.1uF 0603
CH2_C24	SM662382001	Cap Cera 1000pF 10% 500V X7R
CH2_C25	SM158070200	Cap Variable 4.5-20.0 PF
CH2_C26	SM661540056	Cap Cera Chip 5.6PF 500V
CH2_C27	SM661066102	Cap Cera Chip 10% 1000PF/50V
CH2_C29	SM661066102	Cap Cera Chip 10% 1000PF/50V
CH2_C30	SM661066102	Cap Cera Chip 10% 1000PF/50V
CH2_C31	SM662241001	Cap Cera 22pF +/- 5% 100V Npo
CH2_C32	SM661073068	Cap Cera 6.8+/- 0.1PF 50V Npo
CH2_C33	SM661066102	Cap Cera Chip 10% 1000PF/50V
CH2_C34	SM668025334	Cap,tant .33UF/25V 20% L/Esr
CH2_C35	SM661068104	Cap Cera Chip 0.1uF 0603
CH2_C36	SM661068104	Cap Cera Chip 0.1uF 0603
CH2_C37	SM661066102	Cap Cera Chip 10% 1000PF/50V
CH2_C39	SM661068104	Cap Cera Chip 0.1uF 0603
CH2_C40	SM661068104	Cap Cera Chip 0.1uF 0603
CH2_C41	SM661068104	Cap Cera Chip 0.1uF 0603
CH2_C45	SM662131003	Cap Cera Chip 5% 50V .01 UF
CH2_C46	SM662131003	Cap Cera Chip 5% 50V .01 UF
CH2_C47	SM662131003	Cap Cera Chip 5% 50V .01 UF
CH2_C48	SM662131003	Cap Cera Chip 5% 50V .01 UF
CH2_C49	SM662131003	Cap Cera Chip 5% 50V .01 UF
CH2_C50	SM662131003	Cap Cera Chip 5% 50V .01 UF
CH2_C51	SM661068104	Cap Cera Chip 0.1uF 0603
CH2_C53	SM661068104	Cap Cera Chip 0.1uF 0603
CH2_C54	SM661068104	Cap Cera Chip 0.1uF 0603
CH2_C55	SM661066102	Cap Cera Chip 10% 1000PF/50V
CH2_C56	SM661066102	Cap Cera Chip 10% 1000PF/50V
CH2_C57	SM661068104	Cap Cera Chip 0.1uF 0603
CH2_C59	SM158070200	Cap Variable 4.5-20.0 PF
CH2_C60	SM661540056	Cap Cera Chip 5.6PF 500V
CH2_C61	SM661066102	Cap Cera Chip 10% 1000PF/50V
CH2_C62	SM661028100	Cap Cera Chip 1UF 10V
CH2_C63	SM661028100	Cap Cera Chip 1UF 10V
CH2_C64	SM661068104	Cap Cera Chip 0.1uF 0603
CH2_C65	SM661066102	Cap Cera Chip 10% 1000PF/50V
CH2_C66	SM661066102	Cap Cera Chip 10% 1000PF/50V
CH2_C67	SM661068104	Cap Cera Chip 0.1uF 0603
CH2_C68	SM661068104	Cap Cera Chip 0.1uF 0603
CH2_C69	SM661068104	Cap Cera Chip 0.1uF 0603
CH2_C70	SM661068104	Cap Cera Chip 0.1uF 0603
CH2_C71	SM661068104	Cap Cera Chip 0.1uF 0603
CH2_C73	SM661068104	Cap Cera Chip 0.1uF 0603

Part #: 901586-00 Description: 2 GHz 5GS/s 4 Channel Acquisition Board

Location	Part Number	Description
CH2_C74	SM661207104	Cap Cera Chip 20 % .1 UF
CH2_C75	SM662131003	Cap Cera Chip 5% 50V .01 UF
CH2_C76	SM661066102	Cap Cera Chip 10% 1000PF/50V
CH2_C77	SM662152001	Cap Cera Chip 10% 16V 100nF
CH2_C81	SM662152001	Cap Cera Chip 10% 16V 100nF
CH2_C82	SM662152001	Cap Cera Chip 10% 16V 100nF
CH2_C83	SM662152001	Cap Cera Chip 10% 16V 100nF
CH2_C85	SM158011000	Cap Variable .5PF-1.3PF Npo CE
CH2_C88	SM661073300	Cap Cera 30PF+/- 5% 50V Npo
CH2_C89	SM661073068	Cap Cera 6.8+/- 0.1PF 50V Npo
CH2_C90	SM661066102	Cap Cera Chip 10% 1000PF/50V
CH2_C91	SM661066102	Cap Cera Chip 10% 1000PF/50V
CH2_C92	SM158011000	Cap Variable .5PF-1.3PF Npo CE
CH2_C95	SM662131003	Cap Cera Chip 5% 50V .01 UF
CH2_C96	SM668025334	Cap,tant .33UF/25V 20% L/Esr
CH2_C97	SM668010335	Cap,tant 3.3UF/10V 20% L/Esr
CH2_C98	SM668010335	Cap,tant 3.3UF/10V 20% L/Esr
CH2_C102	SM661068104	Cap Cera Chip 0.1uF 0603
CH2_C103	SM662252001	Cap Cera .068uF 10% 16V X7R
CH2_C104	SM652061912	Res Chip 1% 9.1K Ohm .063W
CH2_C107	SM661068104	Cap Cera Chip 0.1uF 0603
CH2_C200	SM661068104	Cap Cera Chip 0.1uF 0603
CH2_CR2	SM229020150	MLC Trans Volt Suppressor
CH2_CR3	SM252023304	Dual Pin Diode Silicon Bar 63-
CH2_CR4	SM252005303	Pin Diode Bar 63-03W
CH2_CR5	SM252005303	Pin Diode Bar 63-03W
CH2_CR6	SM252023066	Pin Diode Bar 66
CH2_CR7	SM252023066	Pin Diode Bar 66
CH2_CR8	SM252023066	Pin Diode Bar 66
CH2_CR1	SM232442828	Diode Bridge HSMS2828
CH2_CR10	SM236030099	Diode SO-Pkg BAV99
CH2_CR11	SM232030001	Diode Array Schottky HSMS-282C
CH2_CR12	SM232030001	Diode Array Schottky HSMS-282C
CH2_CR13	SM252023066	Pin Diode Bar 66
CH2_J3A	7093XXP01	Right Angle Recept. Connector
CH2_J3B	709614300	Bulkhead Receptical Female Bnc
CH2_L1	SM301004001	Bead Ferrite 50 Ohms 3AMPS 120
CH2_L2	SM301004001	Bead Ferrite 50 Ohms 3AMPS 120
CH2_L3	SM301004001	Bead Ferrite 50 Ohms 3AMPS 120
CH2_L4	SM301004001	Bead Ferrite 50 Ohms 3AMPS 120
CH2_L18	SM301004001	Bead Ferrite 50 Ohms 3AMPS 120
CH2_L20	SM301004001	Bead Ferrite 50 Ohms 3AMPS 120
CH2_L28	SM301004001	Bead Ferrite 50 Ohms 3AMPS 120
CH2_L29	SM301004001	Bead Ferrite 50 Ohms 3AMPS 120

Part #: 901586-00 Description: 2 GHz 5GS/s 4 Channel Acquisition Board

Location	Part Number	Description
CH2_L30	SM652041000	Res Zero ohms
CH2_L31	SM652041000	Res Zero ohms
CH2_L32	SM652041000	Res Zero ohms
CH2_L33	SM652041000	Res Zero ohms
CH2_L34	SM652041000	Res Zero ohms
CH2_L35	SM652041000	Res Zero ohms
CH2_Q1	SM270050520	NPN 9GHZ Wideband Transistor
CH2_Q2	SM270050520	NPN 9GHZ Wideband Transistor
CH2_Q9	SM270050520	NPN 9GHZ Wideband Transistor
CH2_Q10	SM275030550	Transistor Pnp BF550
CH2_Q11	SM280122416	Trans. Jfet N MMBF4416/LC6A
CH2_R1	SM652061101	Res Chip 1% 100 Ohm .063W
CH2_R2	SM652061103	Res Chip 1% 10K Ohm .063W
CH2_R3	SM652061103	Res Chip 1% 10K Ohm .063W
CH2_R4	SM652061102	Res Chip 1% 1.0K Ohm .063W
CH2_R5	SM652061681	Res Chip 1% 681 Ohm .063W
CH2_R6	SM652061000	Res Chip 0 Ohm Jumper
CH2_R7	SM652061203	Res Chip 1% 20K Ohm .063W
CH2_R8	SM652061432	Res Chip 1% 4.3K Ohm .063W
CH2_R9	SM652061394	Res Chip 1% 390K Ohm .063W
CH2_R10	SM655040022	Res Chip .5% 50ppm 180K 150V
CH2_R15	SM652061222	Res Chip 1% 2.2K Ohm .063W
CH2_R16	SM652061332	Res Chip 1% 3.3K Ohm .063W
CH2_R17	SM652061101	Res Chip 1% 100 Ohm .063W
CH2_R18	SM655040024	Res Chip .5% 50ppm 300K 150V
CH2_R19	SM655040024	Res Chip .5% 50ppm 300K 150V
CH2_R20	SM655040023	Res Chip .5% 50ppm 240K 150V
CH2_R21	SM652061000	Res Chip 0 Ohm Jumper
CH2_R22	SM652061390	Res Chip 1% 39.0 Ohm .063W
CH2_R23	SM652061121	Res Chip 1% 120 Ohm .063W
CH2_R27	SM652061393	Res Chip 1% 39K Ohm .063W
CH2_R28	SM652041011	Res Chip 1% 49.9 Ohms
CH2_R29	SM652061393	Res Chip 1% 39K Ohm .063W
CH2_R30	SM652000005	Res RF 100 Ohm .25% 1/3W 1206
CH2_R31	SM652000005	Res RF 100 Ohm .25% 1/3W 1206
CH2_R32	SM652061103	Res Chip 1% 10K Ohm .063W
CH2_R33	SM652061103	Res Chip 1% 10K Ohm .063W
CH2_R34	SM655040024	Res Chip .5% 50ppm 300K 150V
CH2_R35	SM655040024	Res Chip .5% 50ppm 300K 150V
CH2_R36	SM652061273	Res Chip 1% 27K Ohm .063W
CH2_R37	SM652061273	Res Chip 1% 27K Ohm .063W
CH2_R38	SM185457503	Res Vari Cermet 50 K
CH2_R39	SM652061271	Res Chip 1% 270 Ohm .063W
CH2_R40	SM652061271	Res Chip 1% 270 Ohm .063W

Part #: 901586-00 Description: 2 GHz 5GS/s 4 Channel Acquisition Board

Location	Part Number	Description
CH2_R41	SM652061271	Res Chip 1% 270 Ohm .063W
CH2_R42	SM652061271	Res Chip 1% 270 Ohm .063W
CH2_R43	SM652061121	Res Chip 1% 120 Ohm .063W
CH2_R44	SM652061222	Res Chip 1% 2.2K Ohm .063W
CH2_R45	SM652061510	Res Chip 1% 51.0 Ohm .063W
CH2_R46	SM652061824	Res Chip 1% 820K Ohm .063W
CH2_R47	SM652061390	Res Chip 1% 39.0 Ohm .063W
CH2_R48	SM655040024	Res Chip .5% 50ppm 300K 150V
CH2_R49	SM652061161	Res Chip 1% 160 Ohm .063W
CH2_R50	SM652061161	Res Chip 1% 160 Ohm .063W
CH2_R51	SM652061161	Res Chip 1% 160 Ohm .063W
CH2_R52	SM652061102	Res Chip 1% 1.0K Ohm .063W
CH2_R53	SM652061154	Res Chip 1% 150K Ohm .063W
CH2_R54	SM652061201	Res Chip 1% 200 Ohm .063W
CH2_R55	SM655030042	Res Thk Film 1% 5.6M Ohm 1/16W
CH2_R56	SM652061240	Res Chip 1% 24.0 Ohm .063W
CH2_R57	SM652061101	Res Chip 1% 100 Ohm .063W
CH2_R59	SM652061361	Res Chip 1% 360 Ohm .063W
CH2_R60	SM652061393	Res Chip 1% 39K Ohm .063W
CH2_R61	SM655040025	Res Chip .5% 50ppm 110K 150V
CH2_R62	SM652061112	Res Chip 1% 1.1K Ohm .063W
CH2_R63	SM652061106	Res Chip 1% 10M Ohm .063W
CH2_R64	SM652061100	Res Chip 1% 10.0 Ohm .063W
CH2_R65	SM652061430	Res Chip 1% 43.2 Ohm .063W
CH2_R66	SM652061201	Res Chip 1% 200 Ohm .063W
CH2_R67	SM652061330	Res Chip 1% 33.0 Ohm .063W
CH2_R70	SM655040024	Res Chip .5% 50ppm 300K 150V
CH2_R71	SM655040024	Res Chip .5% 50ppm 300K 150V
CH2_R72	SM652061131	Res Chip 1% 130 Ohm .063W
CH2_R73	SM185457102	Res Vari Cermet 1 K
CH2_R76	SM661207104	Cap Cera Chip 20 % .1 UF
CH2_R81	SM652061510	Res Chip 1% 51.0 Ohm .063W
CH2_R82	SM655040024	Res Chip .5% 50ppm 300K 150V
CH2_R83	SM652061510	Res Chip 1% 51.0 Ohm .063W
CH2_R84	SM652061203	Res Chip 1% 20K Ohm .063W
CH2_R85	SM652061562	Res Chip 1% 5.6K Ohm .063W
CH2_R90	SM652061273	Res Chip 1% 27K Ohm .063W
CH2_R91	SM652061273	Res Chip 1% 27K Ohm .063W
CH2_R92	SM652061121	Res Chip 1% 120 Ohm .063W
CH2_R93	SM652061271	Res Chip 1% 270 Ohm .063W
CH2_R94	SM652061271	Res Chip 1% 270 Ohm .063W
CH2_R95	SM655040025	Res Chip .5% 50ppm 110K 150V
CH2_R96	SM652061390	Res Chip 1% 39.0 Ohm .063W
CH2_R97	SM652061390	Res Chip 1% 39.0 Ohm .063W

Part #: 901586-00 Description: 2 GHz 5GS/s 4 Channel Acquisition Board

Location	Part Number	Description
CH2_R98	SM652061390	Res Chip 1% 39.0 Ohm .063W
CH2_R99	SM652061361	Res Chip 1% 360 Ohm .063W
CH2_R100	SM652061510	Res Chip 1% 51.0 Ohm .063W
CH2_R101	SM652061510	Res Chip 1% 51.0 Ohm .063W
CH2_R103	SM652061112	Res Chip 1% 1.1K Ohm .063W
CH2_R104	SM655030040	Res Thk Film +/-1% 5.11 Ohm .1
CH2_R105	SM652061102	Res Chip 1% 1.0K Ohm .063W
CH2_R106	SM652061471	Res Chip 1% 470 Ohm .063W
CH2_R107	SM652061510	Res Chip 1% 51.0 Ohm .063W
CH2_R108	SM652061361	Res Chip 1% 360 Ohm .063W
CH2_R109	SM652061102	Res Chip 1% 1.0K Ohm .063W
CH2_R110	SM652061100	Res Chip 1% 10.0 Ohm .063W
CH2_R111	SM652061390	Res Chip 1% 39.0 Ohm .063W
CH2_R112	SM652061393	Res Chip 1% 39K Ohm .063W
CH2_R113	SM652061201	Res Chip 1% 200 Ohm .063W
CH2_R114	SM652061330	Res Chip 1% 33.0 Ohm .063W
CH2_R115	SM652061361	Res Chip 1% 360 Ohm .063W
CH2_R116	SM652061751	Res Chip 1% 750 Ohm .063W
CH2_R118	SM655020025	Res Thk Film 1% 2.74 Ohm 1/16W
CH2_R119	SM655020025	Res Thk Film 1% 2.74 Ohm 1/16W
CH2_R120	SM655020025	Res Thk Film 1% 2.74 Ohm 1/16W
CH2_R121	SM655020025	Res Thk Film 1% 2.74 Ohm 1/16W
CH2_R128	SM652061000	Res Chip 0 Ohm Jumper
CH2_R129	SM652061201	Res Chip 1% 200 Ohm .063W
CH2_R130	SM652061240	Res Chip 1% 24.0 Ohm .063W
CH2_R131	SM652061390	Res Chip 1% 39.0 Ohm .063W
CH2_R132	SM652061390	Res Chip 1% 39.0 Ohm .063W
CH2_R133	SM652061105	Res Chip 1% 1.0M Ohm .063W
CH2_R134	SM655020017	Res Thk Film 1% 1K Ohm 1/16W
CH2_R135	SM655020017	Res Thk Film 1% 1K Ohm 1/16W
CH2_R136	SM655020017	Res Thk Film 1% 1K Ohm 1/16W
CH2_R137	SM655020017	Res Thk Film 1% 1K Ohm 1/16W
CH2_R138	SM655020017	Res Thk Film 1% 1K Ohm 1/16W
CH2_R139	SM655020017	Res Thk Film 1% 1K Ohm 1/16W
CH2_R141	SM655030040	Res Thk Film +/-1% 5.11 Ohm .1
CH2_R142	SM652061512	Res Chip 1% 5.1K Ohm .063W
CH2_R200	SM652061121	Res Chip 1% 120 Ohm .063W
CH2_RL1	SM430530001	Relay Smd Dual Form C 5V
CH2_RL2	SM430530001	Relay Smd Dual Form C 5V
CH2_RL3	430500003	20DB Attenuator Relay DC-3GHZ
CH2_RL4	SM430530001	Relay Smd Dual Form C 5V
CH2_RL7	SM431030005	Relay SPDT HF 50 Ohm 4.5V
CH2_RL8	SM430530001	Relay Smd Dual Form C 5V
CH2_U1	HFE653B	Front End Amplifier

Part #: 901586-00 Description: 2 GHz 5GS/s 4 Channel Acquisition Board

Location	Part Number	Description
CH2_U5	SM207231654	IC Dual 14-Bit Serial Dac
CH2_U6	SM289772003	Transistor Array 2003
CH2_U8	SM207770442	IC Analog Switch DG442
CH2_U9	SM208470705	IC OP Amp Picoamp Input AD705
CH2_U10	SM208450686	IC Wideband OP Amp OPA686
CH2_U12	SM208472022	Opamp, Dual, Low Pwr TLE2022C
CH2_U13	SM205616001	IC 8-Bit Shift Reg 74LV594ADR
CH2_U14	SM208475460	IC OP Amp Sin-Sup RtoR Ins Amp
CH2_U15	SM208470705	IC OP Amp Picoamp Input AD705
CH2_U50	SM208701023	IC Temperature Sensor
CH2_U51	SM208701023	IC Temperature Sensor
CH2_U81	901686-00	Lower front end EMI shield
CH2_U82	901685-00	Upper front end EMI shield
CH3_A1	901140-00	Chip Atten. 3dB .5% Trim Res
CH3_C1	SM668010335	Cap,tant 3.3UF/10V 20% L/Esr
CH3_C4	SM661540056	Cap Cera Chip 5.6PF 500V
CH3_C6	SM661066102	Cap Cera Chip 10% 1000PF/50V
CH3_C7	SM662212001	Cap Cera .015uF 10% 25V X7R
CH3_C9	SM661068104	Cap Cera Chip 0.1uF 0603
CH3_C10	SM661066102	Cap Cera Chip 10% 1000PF/50V
CH3_C11	SM661066102	Cap Cera Chip 10% 1000PF/50V
CH3_C12	SM661068104	Cap Cera Chip 0.1uF 0603
CH3_C13	SM661068104	Cap Cera Chip 0.1uF 0603
CH3_C14	SM661068104	Cap Cera Chip 0.1uF 0603
CH3_C15	SM661068104	Cap Cera Chip 0.1uF 0603
CH3_C16	SM661068104	Cap Cera Chip 0.1uF 0603
CH3_C17	SM661028100	Cap Cera Chip 1UF 10V
CH3_C18	SM661068104	Cap Cera Chip 0.1uF 0603
CH3_C19	SM661066102	Cap Cera Chip 10% 1000PF/50V
CH3_C21	SM661066102	Cap Cera Chip 10% 1000PF/50V
CH3_C22	SM661207223	Cap Cera Chip 20% .022 UF
CH3_C23	SM661068104	Cap Cera Chip 0.1uF 0603
CH3_C24	SM662382001	Cap Cera 1000pF 10% 500V X7R
CH3_C25	SM158070200	Cap Variable 4.5-20.0 PF
CH3_C26	SM661540056	Cap Cera Chip 5.6PF 500V
CH3_C27	SM661066102	Cap Cera Chip 10% 1000PF/50V
CH3_C29	SM661066102	Cap Cera Chip 10% 1000PF/50V
CH3_C30	SM661066102	Cap Cera Chip 10% 1000PF/50V
CH3_C31	SM662241001	Cap Cera 22pF +/- 5% 100V Npo
CH3_C32	SM661073068	Cap Cera 6.8+/- 0.1PF 50V Npo
CH3_C33	SM661066102	Cap Cera Chip 10% 1000PF/50V
CH3_C34	SM668025334	Cap,tant .33UF/25V 20% L/Esr
CH3_C35	SM661068104	Cap Cera Chip 0.1uF 0603
CH3_C36	SM661068104	Cap Cera Chip 0.1uF 0603

Part #: 901586-00 Description: 2 GHz 5GS/s 4 Channel Acquisition Board

Location	Part Number	Description
CH3_C37	SM661066102	Cap Cera Chip 10% 1000PF/50V
CH3_C39	SM661068104	Cap Cera Chip 0.1uF 0603
CH3_C40	SM661068104	Cap Cera Chip 0.1uF 0603
CH3_C41	SM661068104	Cap Cera Chip 0.1uF 0603
CH3_C45	SM662131003	Cap Cera Chip 5% 50V .01 UF
CH3_C46	SM662131003	Cap Cera Chip 5% 50V .01 UF
CH3_C47	SM662131003	Cap Cera Chip 5% 50V .01 UF
CH3_C48	SM662131003	Cap Cera Chip 5% 50V .01 UF
CH3_C49	SM662131003	Cap Cera Chip 5% 50V .01 UF
CH3_C50	SM662131003	Cap Cera Chip 5% 50V .01 UF
CH3_C51	SM661068104	Cap Cera Chip 0.1uF 0603
CH3_C53	SM661068104	Cap Cera Chip 0.1uF 0603
CH3_C54	SM661068104	Cap Cera Chip 0.1uF 0603
CH3_C55	SM661066102	Cap Cera Chip 10% 1000PF/50V
CH3_C56	SM661066102	Cap Cera Chip 10% 1000PF/50V
CH3_C57	SM661068104	Cap Cera Chip 0.1uF 0603
CH3_C59	SM158070200	Cap Variable 4.5-20.0 PF
CH3_C60	SM661540056	Cap Cera Chip 5.6PF 500V
CH3_C61	SM661066102	Cap Cera Chip 10% 1000PF/50V
CH3_C62	SM661028100	Cap Cera Chip 1UF 10V
CH3_C63	SM661028100	Cap Cera Chip 1UF 10V
CH3_C64	SM661068104	Cap Cera Chip 0.1uF 0603
CH3_C65	SM661066102	Cap Cera Chip 10% 1000PF/50V
CH3_C66	SM661066102	Cap Cera Chip 10% 1000PF/50V
CH3_C67	SM661068104	Cap Cera Chip 0.1uF 0603
CH3_C68	SM661068104	Cap Cera Chip 0.1uF 0603
CH3_C69	SM661068104	Cap Cera Chip 0.1uF 0603
CH3_C70	SM661068104	Cap Cera Chip 0.1uF 0603
CH3_C71	SM661068104	Cap Cera Chip 0.1uF 0603
CH3_C73	SM661068104	Cap Cera Chip 0.1uF 0603
CH3_C74	SM661207104	Cap Cera Chip 20 % .1 UF
CH3_C75	SM662131003	Cap Cera Chip 5% 50V .01 UF
CH3_C76	SM661066102	Cap Cera Chip 10% 1000PF/50V
CH3_C77	SM662152001	Cap Cera Chip 10% 16V 100nF
CH3_C81	SM662152001	Cap Cera Chip 10% 16V 100nF
CH3_C82	SM662152001	Cap Cera Chip 10% 16V 100nF
CH3_C83	SM662152001	Cap Cera Chip 10% 16V 100nF
CH3_C85	SM158011000	Cap Variable .5PF-1.3PF Npo CE
CH3_C88	SM661073300	Cap Cera 30PF+/- 5% 50V Npo
CH3_C89	SM661073068	Cap Cera 6.8+/- 0.1PF 50V Npo
CH3_C90	SM661066102	Cap Cera Chip 10% 1000PF/50V
CH3_C91	SM661066102	Cap Cera Chip 10% 1000PF/50V
CH3_C92	SM158011000	Cap Variable .5PF-1.3PF Npo CE
CH3_C95	SM662131003	Cap Cera Chip 5% 50V .01 UF

Part #: 901586-00 Description: 2 GHz 5GS/s 4 Channel Acquisition Board

Location	Part Number	Description
CH3_C96	SM668025334	Cap,tant .33UF/25V 20% L/Esr
CH3_C97	SM668010335	Cap,tant 3.3UF/10V 20% L/Esr
CH3_C98	SM668010335	Cap,tant 3.3UF/10V 20% L/Esr
CH3_C102	SM661068104	Cap Cera Chip 0.1uF 0603
CH3_C103	SM662252001	Cap Cera .068uF 10% 16V X7R
CH3_C104	SM652061912	Res Chip 1% 9.1K Ohm .063W
CH3_C107	SM661068104	Cap Cera Chip 0.1uF 0603
CH3_C200	SM661068104	Cap Cera Chip 0.1uF 0603
CH3_CR1	SM232442828	Diode Bridge HSMS2828
CH3_CR2	SM229020150	MLC Trans Volt Suppressor
CH3_CR3	SM252023304	Dual Pin Diode Silicon Bar 63-
CH3_CR4	SM252005303	Pin Diode Bar 63-03W
CH3_CR5	SM252005303	Pin Diode Bar 63-03W
CH3_CR6	SM252023066	Pin Diode Bar 66
CH3_CR7	SM252023066	Pin Diode Bar 66
CH3_CR8	SM252023066	Pin Diode Bar 66
CH3_CR10	SM236030099	Diode SO-Pkg BAV99
CH3_CR11	SM232030001	Diode Array Schottky HSMS-282C
CH3_CR12	SM232030001	Diode Array Schottky HSMS-282C
CH3_CR13	SM252023066	Pin Diode Bar 66
CH3_J3A	7093XXP01	Right Angle Recept. Connector
CH3_J3B	709614300	Bulkhead Receptical Female Bnc
CH3_L1	SM301004001	Bead Ferrite 50 Ohms 3AMPS 120
CH3_L2	SM301004001	Bead Ferrite 50 Ohms 3AMPS 120
CH3_L3	SM301004001	Bead Ferrite 50 Ohms 3AMPS 120
CH3_L4	SM301004001	Bead Ferrite 50 Ohms 3AMPS 120
CH3_L18	SM301004001	Bead Ferrite 50 Ohms 3AMPS 120
CH3_L20	SM301004001	Bead Ferrite 50 Ohms 3AMPS 120
CH3_L28	SM301004001	Bead Ferrite 50 Ohms 3AMPS 120
CH3_L29	SM301004001	Bead Ferrite 50 Ohms 3AMPS 120
CH3_L30	SM652041000	Res Zero ohms
CH3_L31	SM652041000	Res Zero ohms
CH3_L32	SM652041000	Res Zero ohms
CH3_L33	SM652041000	Res Zero ohms
CH3_L34	SM652041000	Res Zero ohms
CH3_L35	SM652041000	Res Zero ohms
CH3_Q1	SM270050520	NPN 9GHZ Wideband Transistor
CH3_Q2	SM270050520	NPN 9GHZ Wideband Transistor
CH3_Q9	SM270050520	NPN 9GHZ Wideband Transistor
CH3_Q10	SM275030550	Transistor Pnp BF550
CH3_Q11	SM280122416	Trans. Jfet N MMBF4416/LC6A
CH3_R1	SM652061101	Res Chip 1% 100 Ohm .063W
CH3_R2	SM652061103	Res Chip 1% 10K Ohm .063W
CH3_R3	SM652061103	Res Chip 1% 10K Ohm .063W

Part #: 901586-00 Description: 2 GHz 5GS/s 4 Channel Acquisition Board

Location	Part Number	Description
CH3_R4	SM652061102	Res Chip 1% 1.0K Ohm .063W
CH3_R5	SM652061681	Res Chip 1% 681 Ohm .063W
CH3_R6	SM652061000	Res Chip 0 Ohm Jumper
CH3_R7	SM652061203	Res Chip 1% 20K Ohm .063W
CH3_R8	SM652061432	Res Chip 1% 4.3K Ohm .063W
CH3_R9	SM652061394	Res Chip 1% 390K Ohm .063W
CH3_R10	SM655040022	Res Chip .5% 50ppm 180K 150V
CH3_R15	SM652061222	Res Chip 1% 2.2K Ohm .063W
CH3_R16	SM652061332	Res Chip 1% 3.3K Ohm .063W
CH3_R17	SM652061101	Res Chip 1% 100 Ohm .063W
CH3_R18	SM655040024	Res Chip .5% 50ppm 300K 150V
CH3_R19	SM655040024	Res Chip .5% 50ppm 300K 150V
CH3_R20	SM655040023	Res Chip .5% 50ppm 240K 150V
CH3_R21	SM652061000	Res Chip 0 Ohm Jumper
CH3_R22	SM652061390	Res Chip 1% 39.0 Ohm .063W
CH3_R23	SM652061121	Res Chip 1% 120 Ohm .063W
CH3_R27	SM652061393	Res Chip 1% 39K Ohm .063W
CH3_R28	SM652041011	Res Chip 1% 49.9 Ohms
CH3_R29	SM652061393	Res Chip 1% 39K Ohm .063W
CH3_R30	SM652000005	Res RF 100 Ohm .25% 1/3W 1206
CH3_R31	SM652000005	Res RF 100 Ohm .25% 1/3W 1206
CH3_R32	SM652061103	Res Chip 1% 10K Ohm .063W
CH3_R33	SM652061103	Res Chip 1% 10K Ohm .063W
CH3_R34	SM655040024	Res Chip .5% 50ppm 300K 150V
CH3_R35	SM655040024	Res Chip .5% 50ppm 300K 150V
CH3_R36	SM652061273	Res Chip 1% 27K Ohm .063W
CH3_R37	SM652061273	Res Chip 1% 27K Ohm .063W
CH3_R38	SM185457503	Res Vari Cermet 50 K
CH3_R39	SM652061271	Res Chip 1% 270 Ohm .063W
CH3_R40	SM652061271	Res Chip 1% 270 Ohm .063W
CH3_R41	SM652061271	Res Chip 1% 270 Ohm .063W
CH3_R42	SM652061271	Res Chip 1% 270 Ohm .063W
CH3_R43	SM652061121	Res Chip 1% 120 Ohm .063W
CH3_R44	SM652061222	Res Chip 1% 2.2K Ohm .063W
CH3_R45	SM652061510	Res Chip 1% 51.0 Ohm .063W
CH3_R46	SM652061824	Res Chip 1% 820K Ohm .063W
CH3_R47	SM652061390	Res Chip 1% 39.0 Ohm .063W
CH3_R48	SM655040024	Res Chip .5% 50ppm 300K 150V
CH3_R49	SM652061161	Res Chip 1% 160 Ohm .063W
CH3_R50	SM652061161	Res Chip 1% 160 Ohm .063W
CH3_R51	SM652061161	Res Chip 1% 160 Ohm .063W
CH3_R52	SM652061102	Res Chip 1% 1.0K Ohm .063W
CH3_R53	SM652061154	Res Chip 1% 150K Ohm .063W
CH3_R54	SM652061201	Res Chip 1% 200 Ohm .063W

Part #: 901586-00 Description: 2 GHz 5GS/s 4 Channel Acquisition Board

Location	Part Number	Description
CH3_R55	SM655030042	Res Thk Film 1% 5.6M Ohm 1/16W
CH3_R56	SM652061240	Res Chip 1% 24.0 Ohm .063W
CH3_R57	SM652061101	Res Chip 1% 100 Ohm .063W
CH3_R59	SM652061361	Res Chip 1% 360 Ohm .063W
CH3_R60	SM652061393	Res Chip 1% 39K Ohm .063W
CH3_R61	SM655040025	Res Chip .5% 50ppm 110K 150V
CH3_R62	SM652061112	Res Chip 1% 1.1K Ohm .063W
CH3_R63	SM652061106	Res Chip 1% 10M Ohm .063W
CH3_R64	SM652061100	Res Chip 1% 10.0 Ohm .063W
CH3_R65	SM652061430	Res Chip 1% 43.2 Ohm .063W
CH3_R66	SM652061201	Res Chip 1% 200 Ohm .063W
CH3_R67	SM652061330	Res Chip 1% 33.0 Ohm .063W
CH3_R70	SM655040024	Res Chip .5% 50ppm 300K 150V
CH3_R71	SM655040024	Res Chip .5% 50ppm 300K 150V
CH3_R72	SM652061131	Res Chip 1% 130 Ohm .063W
CH3_R73	SM185457102	Res Vari Cermet 1 K
CH3_R76	SM661207104	Cap Cera Chip 20 % .1 UF
CH3_R81	SM652061510	Res Chip 1% 51.0 Ohm .063W
CH3_R82	SM655040024	Res Chip .5% 50ppm 300K 150V
CH3_R83	SM652061510	Res Chip 1% 51.0 Ohm .063W
CH3_R84	SM652061203	Res Chip 1% 20K Ohm .063W
CH3_R85	SM652061562	Res Chip 1% 5.6K Ohm .063W
CH3_R90	SM652061273	Res Chip 1% 27K Ohm .063W
CH3_R91	SM652061273	Res Chip 1% 27K Ohm .063W
CH3_R92	SM652061121	Res Chip 1% 120 Ohm .063W
CH3_R93	SM652061271	Res Chip 1% 270 Ohm .063W
CH3_R94	SM652061271	Res Chip 1% 270 Ohm .063W
CH3_R95	SM655040025	Res Chip .5% 50ppm 110K 150V
CH3_R96	SM652061390	Res Chip 1% 39.0 Ohm .063W
CH3_R97	SM652061390	Res Chip 1% 39.0 Ohm .063W
CH3_R98	SM652061390	Res Chip 1% 39.0 Ohm .063W
CH3_R99	SM652061361	Res Chip 1% 360 Ohm .063W
CH3_R100	SM652061510	Res Chip 1% 51.0 Ohm .063W
CH3_R101	SM652061510	Res Chip 1% 51.0 Ohm .063W
CH3_R103	SM652061112	Res Chip 1% 1.1K Ohm .063W
CH3_R104	SM655030040	Res Thk Film +/-1% 5.11 Ohm .1
CH3_R105	SM652061102	Res Chip 1% 1.0K Ohm .063W
CH3_R106	SM652061471	Res Chip 1% 470 Ohm .063W
CH3_R107	SM652061510	Res Chip 1% 51.0 Ohm .063W
CH3_R108	SM652061361	Res Chip 1% 360 Ohm .063W
CH3_R109	SM652061102	Res Chip 1% 1.0K Ohm .063W
CH3_R110	SM652061100	Res Chip 1% 10.0 Ohm .063W
CH3_R111	SM652061390	Res Chip 1% 39.0 Ohm .063W
CH3_R112	SM652061393	Res Chip 1% 39K Ohm .063W

Part #: 901586-00 Description: 2 GHz 5GS/s 4 Channel Acquisition Board

Location	Part Number	Description
CH3_R113	SM652061201	Res Chip 1% 200 Ohm .063W
CH3_R114	SM652061330	Res Chip 1% 33.0 Ohm .063W
CH3_R115	SM652061361	Res Chip 1% 360 Ohm .063W
CH3_R116	SM652061751	Res Chip 1% 750 Ohm .063W
CH3_R118	SM655020025	Res Thk Film 1% 2.74 Ohm 1/16W
CH3_R119	SM655020025	Res Thk Film 1% 2.74 Ohm 1/16W
CH3_R120	SM655020025	Res Thk Film 1% 2.74 Ohm 1/16W
CH3_R121	SM655020025	Res Thk Film 1% 2.74 Ohm 1/16W
CH3_R128	SM652061000	Res Chip 0 Ohm Jumper
CH3_R129	SM652061201	Res Chip 1% 200 Ohm .063W
CH3_R130	SM652061240	Res Chip 1% 24.0 Ohm .063W
CH3_R131	SM652061390	Res Chip 1% 39.0 Ohm .063W
CH3_R132	SM652061390	Res Chip 1% 39.0 Ohm .063W
CH3_R133	SM652061105	Res Chip 1% 1.0M Ohm .063W
CH3_R134	SM655020017	Res Thk Film 1% 1K Ohm 1/16W
CH3_R135	SM655020017	Res Thk Film 1% 1K Ohm 1/16W
CH3_R136	SM655020017	Res Thk Film 1% 1K Ohm 1/16W
CH3_R137	SM655020017	Res Thk Film 1% 1K Ohm 1/16W
CH3_R138	SM655020017	Res Thk Film 1% 1K Ohm 1/16W
CH3_R139	SM655020017	Res Thk Film 1% 1K Ohm 1/16W
CH3_R141	SM655030040	Res Thk Film +/-1% 5.11 Ohm .1
CH3_R142	SM652061512	Res Chip 1% 5.1K Ohm .063W
CH3_R200	SM652061121	Res Chip 1% 120 Ohm .063W
CH3_RL1	SM430530001	Relay Smd Dual Form C 5V
CH3_RL2	SM430530001	Relay Smd Dual Form C 5V
CH3_RL3	430500003	20DB Attenuator Relay DC-3GHZ
CH3_RL4	SM430530001	Relay Smd Dual Form C 5V
CH3_RL7	SM431030005	Relay SPDT HF 50 Ohm 4.5V
CH3_RL8	SM430530001	Relay Smd Dual Form C 5V
CH3_U1	HFE653B	Front End Amplifier
CH3_U5	SM207231654	IC Dual 14-Bit Serial Dac
CH3_U6	SM289772003	Transistor Array 2003
CH3_U8	SM207770442	IC Analog Switch DG442
CH3_U9	SM208470705	IC OP Amp Picoamp Input AD705
CH3_U10	SM208450686	IC Wideband OP Amp OPA686
CH3_U12	SM208472022	Opamp, Dual, Low Pwr TLE2022C
CH3_U13	SM205616001	IC 8-Bit Shift Reg 74LV594ADR
CH3_U14	SM208475460	IC OP Amp Sin-Sup RtoR Ins Amp
CH3_U15	SM208470705	IC OP Amp Picoamp Input AD705
CH3_U50	SM208701023	IC Temperature Sensor
CH3_U51	SM208701023	IC Temperature Sensor
CH3_U81	901686-00	Lower front end EMI shield
CH3_U82	901685-00	Upper front end EMI shield
CH4_A1	901140-00	Chip Atten. 3dB .5% Trim Res

Part #: 901586-00 Description: 2 GHz 5GS/s 4 Channel Acquisition Board

Location	Part Number	Description
CH4_C1	SM668010335	Cap,tant 3.3UF/10V 20% L/Esr
CH4_C4	SM661540056	Cap Cera Chip 5.6PF 500V
CH4_C6	SM661066102	Cap Cera Chip 10% 1000PF/50V
CH4_C7	SM662212001	Cap Cera .015uF 10% 25V X7R
CH4_C9	SM661068104	Cap Cera Chip 0.1uF 0603
CH4_C10	SM661066102	Cap Cera Chip 10% 1000PF/50V
CH4_C11	SM661066102	Cap Cera Chip 10% 1000PF/50V
CH4_C12	SM661068104	Cap Cera Chip 0.1uF 0603
CH4_C13	SM661068104	Cap Cera Chip 0.1uF 0603
CH4_C14	SM661068104	Cap Cera Chip 0.1uF 0603
CH4_C15	SM661068104	Cap Cera Chip 0.1uF 0603
CH4_C16	SM661068104	Cap Cera Chip 0.1uF 0603
CH4_C17	SM661028100	Cap Cera Chip 1UF 10V
CH4_C18	SM661068104	Cap Cera Chip 0.1uF 0603
CH4_C19	SM661066102	Cap Cera Chip 10% 1000PF/50V
CH4_C21	SM661066102	Cap Cera Chip 10% 1000PF/50V
CH4_C22	SM661207223	Cap Cera Chip 20% .022 UF
CH4_C23	SM661068104	Cap Cera Chip 0.1uF 0603
CH4_C24	SM662382001	Cap Cera 1000pF 10% 500V X7R
CH4_C25	SM158070200	Cap Variable 4.5-20.0 PF
CH4_C26	SM661540056	Cap Cera Chip 5.6PF 500V
CH4_C27	SM661066102	Cap Cera Chip 10% 1000PF/50V
CH4_C29	SM661066102	Cap Cera Chip 10% 1000PF/50V
CH4_C30	SM661066102	Cap Cera Chip 10% 1000PF/50V
CH4_C31	SM662241001	Cap Cera 22pF +/- 5% 100V Npo
CH4_C32	SM661073068	Cap Cera 6.8+/- 0.1PF 50V Npo
CH4_C33	SM661066102	Cap Cera Chip 10% 1000PF/50V
CH4_C34	SM668025334	Cap,tant .33UF/25V 20% L/Esr
CH4_C35	SM661068104	Cap Cera Chip 0.1uF 0603
CH4_C36	SM661068104	Cap Cera Chip 0.1uF 0603
CH4_C37	SM661066102	Cap Cera Chip 10% 1000PF/50V
CH4_C39	SM661068104	Cap Cera Chip 0.1uF 0603
CH4_C40	SM661068104	Cap Cera Chip 0.1uF 0603
CH4_C41	SM661068104	Cap Cera Chip 0.1uF 0603
CH4_C45	SM662131003	Cap Cera Chip 5% 50V .01 UF
CH4_C46	SM662131003	Cap Cera Chip 5% 50V .01 UF
CH4_C47	SM662131003	Cap Cera Chip 5% 50V .01 UF
CH4_C48	SM662131003	Cap Cera Chip 5% 50V .01 UF
CH4_C49	SM662131003	Cap Cera Chip 5% 50V .01 UF
CH4_C50	SM662131003	Cap Cera Chip 5% 50V .01 UF
CH4_C51	SM661068104	Cap Cera Chip 0.1uF 0603
CH4_C53	SM661068104	Cap Cera Chip 0.1uF 0603
CH4_C54	SM661068104	Cap Cera Chip 0.1uF 0603
CH4_C55	SM661066102	Cap Cera Chip 10% 1000PF/50V

Part #: 901586-00 Description: 2 GHz 5GS/s 4 Channel Acquisition Board

Location	Part Number	Description
CH4_C56	SM661066102	Cap Cera Chip 10% 1000PF/50V
CH4_C57	SM661068104	Cap Cera Chip 0.1uF 0603
CH4_C59	SM158070200	Cap Variable 4.5-20.0 PF
CH4_C60	SM661540056	Cap Cera Chip 5.6PF 500V
CH4_C61	SM661066102	Cap Cera Chip 10% 1000PF/50V
CH4_C62	SM661028100	Cap Cera Chip 1UF 10V
CH4_C63	SM661028100	Cap Cera Chip 1UF 10V
CH4_C64	SM661068104	Cap Cera Chip 0.1uF 0603
CH4_C65	SM661066102	Cap Cera Chip 10% 1000PF/50V
CH4_C66	SM661066102	Cap Cera Chip 10% 1000PF/50V
CH4_C67	SM661068104	Cap Cera Chip 0.1uF 0603
CH4_C68	SM661068104	Cap Cera Chip 0.1uF 0603
CH4_C69	SM661068104	Cap Cera Chip 0.1uF 0603
CH4_C70	SM661068104	Cap Cera Chip 0.1uF 0603
CH4_C71	SM661068104	Cap Cera Chip 0.1uF 0603
CH4_C73	SM661068104	Cap Cera Chip 0.1uF 0603
CH4_C74	SM661207104	Cap Cera Chip 20 % .1 UF
CH4_C75	SM662131003	Cap Cera Chip 5% 50V .01 UF
CH4_C76	SM661066102	Cap Cera Chip 10% 1000PF/50V
CH4_C77	SM662152001	Cap Cera Chip 10% 16V 100nF
CH4_C81	SM662152001	Cap Cera Chip 10% 16V 100nF
CH4_C82	SM662152001	Cap Cera Chip 10% 16V 100nF
CH4_C83	SM662152001	Cap Cera Chip 10% 16V 100nF
CH4_C85	SM158011000	Cap Variable .5PF-1.3PF Npo CE
CH4_C88	SM661073300	Cap Cera 30PF+/- 5% 50V Npo
CH4_C89	SM661073068	Cap Cera 6.8+/- 0.1PF 50V Npo
CH4_C90	SM661066102	Cap Cera Chip 10% 1000PF/50V
CH4_C91	SM661066102	Cap Cera Chip 10% 1000PF/50V
CH4_C92	SM158011000	Cap Variable .5PF-1.3PF Npo CE
CH4_C95	SM662131003	Cap Cera Chip 5% 50V .01 UF
CH4_C96	SM668025334	Cap,tant .33UF/25V 20% L/Esr
CH4_C97	SM668010335	Cap,tant 3.3UF/10V 20% L/Esr
CH4_C98	SM668010335	Cap,tant 3.3UF/10V 20% L/Esr
CH4_C102	SM661068104	Cap Cera Chip 0.1uF 0603
CH4_C103	SM662252001	Cap Cera .068uF 10% 16V X7R
CH4_C104	SM652061912	Res Chip 1% 9.1K Ohm .063W
CH4_C107	SM661068104	Cap Cera Chip 0.1uF 0603
CH4_C200	SM661068104	Cap Cera Chip 0.1uF 0603
CH4_CR1	SM232442828	Diode Bridge HSMS2828
CH4_CR2	SM229020150	MLC Trans Volt Suppressor
CH4_CR3	SM252023304	Dual Pin Diode Silicon Bar 63-
CH4_CR4	SM252005303	Pin Diode Bar 63-03W
CH4_CR5	SM252005303	Pin Diode Bar 63-03W
CH4_CR6	SM252023066	Pin Diode Bar 66

Part #: 901586-00 Description: 2 GHz 5GS/s 4 Channel Acquisition Board

Location	Part Number	Description
CH4_CR7	SM252023066	Pin Diode Bar 66
CH4_CR8	SM252023066	Pin Diode Bar 66
CH4_CR10	SM236030099	Diode SO-Pkg BAV99
CH4_CR11	SM232030001	Diode Array Schottky HSMS-282C
CH4_CR12	SM232030001	Diode Array Schottky HSMS-282C
CH4_CR13	SM252023066	Pin Diode Bar 66
CH4_J3A	7093XXP01	Right Angle Recept. Connector
CH4_J3B	709614300	Bulkhead Receptical Female Bnc
CH4_L1	SM301004001	Bead Ferrite 50 Ohms 3AMPS 120
CH4_L2	SM301004001	Bead Ferrite 50 Ohms 3AMPS 120
CH4_L3	SM301004001	Bead Ferrite 50 Ohms 3AMPS 120
CH4_L4	SM301004001	Bead Ferrite 50 Ohms 3AMPS 120
CH4_L18	SM301004001	Bead Ferrite 50 Ohms 3AMPS 120
CH4_L20	SM301004001	Bead Ferrite 50 Ohms 3AMPS 120
CH4_L28	SM301004001	Bead Ferrite 50 Ohms 3AMPS 120
CH4_L29	SM301004001	Bead Ferrite 50 Ohms 3AMPS 120
CH4_L30	SM652041000	Res Zero ohms
CH4_L31	SM652041000	Res Zero ohms
CH4_L32	SM652041000	Res Zero ohms
CH4_L33	SM652041000	Res Zero ohms
CH4_L34	SM652041000	Res Zero ohms
CH4_L35	SM652041000	Res Zero ohms
CH4_Q1	SM270050520	NPN 9GHZ Wideband Transistor
CH4_Q2	SM270050520	NPN 9GHZ Wideband Transistor
CH4_Q9	SM270050520	NPN 9GHZ Wideband Transistor
CH4_Q10	SM275030550	Transistor Pnp BF550
CH4_Q11	SM280122416	Trans. Jfet N MMBF4416/LC6A
CH4_R1	SM652061101	Res Chip 1% 100 Ohm .063W
CH4_R2	SM652061103	Res Chip 1% 10K Ohm .063W
CH4_R3	SM652061103	Res Chip 1% 10K Ohm .063W
CH4_R4	SM652061102	Res Chip 1% 1.0K Ohm .063W
CH4_R5	SM652061681	Res Chip 1% 681 Ohm .063W
CH4_R6	SM652061000	Res Chip 0 Ohm Jumper
CH4_R7	SM652061203	Res Chip 1% 20K Ohm .063W
CH4_R8	SM652061432	Res Chip 1% 4.3K Ohm .063W
CH4_R9	SM652061394	Res Chip 1% 390K Ohm .063W
CH4_R10	SM655040022	Res Chip .5% 50ppm 180K 150V
CH4_R15	SM652061222	Res Chip 1% 2.2K Ohm .063W
CH4_R16	SM652061332	Res Chip 1% 3.3K Ohm .063W
CH4_R17	SM652061101	Res Chip 1% 100 Ohm .063W
CH4_R18	SM655040024	Res Chip .5% 50ppm 300K 150V
CH4_R19	SM655040024	Res Chip .5% 50ppm 300K 150V
CH4_R20	SM655040023	Res Chip .5% 50ppm 240K 150V
CH4_R21	SM652061000	Res Chip 0 Ohm Jumper

Part #: 901586-00 Description: 2 GHz 5GS/s 4 Channel Acquisition Board

Location	Part Number	Description
CH4_R22	SM652061390	Res Chip 1% 39.0 Ohm .063W
CH4_R23	SM652061121	Res Chip 1% 120 Ohm .063W
CH4_R27	SM652061393	Res Chip 1% 39K Ohm .063W
CH4_R28	SM652041011	Res Chip 1% 49.9 Ohms
CH4_R29	SM652061393	Res Chip 1% 39K Ohm .063W
CH4_R30	SM652000005	Res RF 100 Ohm .25% 1/3W 1206
CH4_R31	SM652000005	Res RF 100 Ohm .25% 1/3W 1206
CH4_R32	SM652061103	Res Chip 1% 10K Ohm .063W
CH4_R33	SM652061103	Res Chip 1% 10K Ohm .063W
CH4_R34	SM655040024	Res Chip .5% 50ppm 300K 150V
CH4_R35	SM655040024	Res Chip .5% 50ppm 300K 150V
CH4_R36	SM652061273	Res Chip 1% 27K Ohm .063W
CH4_R37	SM652061273	Res Chip 1% 27K Ohm .063W
CH4_R38	SM185457503	Res Vari Cermet 50 K
CH4_R39	SM652061271	Res Chip 1% 270 Ohm .063W
CH4_R40	SM652061271	Res Chip 1% 270 Ohm .063W
CH4_R41	SM652061271	Res Chip 1% 270 Ohm .063W
CH4_R42	SM652061271	Res Chip 1% 270 Ohm .063W
CH4_R43	SM652061121	Res Chip 1% 120 Ohm .063W
CH4_R44	SM652061222	Res Chip 1% 2.2K Ohm .063W
CH4_R45	SM652061510	Res Chip 1% 51.0 Ohm .063W
CH4_R46	SM652061824	Res Chip 1% 820K Ohm .063W
CH4_R47	SM652061390	Res Chip 1% 39.0 Ohm .063W
CH4_R48	SM655040024	Res Chip .5% 50ppm 300K 150V
CH4_R49	SM652061161	Res Chip 1% 160 Ohm .063W
CH4_R50	SM652061161	Res Chip 1% 160 Ohm .063W
CH4_R51	SM652061161	Res Chip 1% 160 Ohm .063W
CH4_R52	SM652061102	Res Chip 1% 1.0K Ohm .063W
CH4_R53	SM652061154	Res Chip 1% 150K Ohm .063W
CH4_R54	SM652061201	Res Chip 1% 200 Ohm .063W
CH4_R55	SM655030042	Res Thk Film 1% 5.6M Ohm 1/16W
CH4_R56	SM652061240	Res Chip 1% 24.0 Ohm .063W
CH4_R57	SM652061101	Res Chip 1% 100 Ohm .063W
CH4_R59	SM652061361	Res Chip 1% 360 Ohm .063W
CH4_R60	SM652061393	Res Chip 1% 39K Ohm .063W
CH4_R61	SM655040025	Res Chip .5% 50ppm 110K 150V
CH4_R62	SM652061112	Res Chip 1% 1.1K Ohm .063W
CH4_R63	SM652061106	Res Chip 1% 10M Ohm .063W
CH4_R64	SM652061100	Res Chip 1% 10.0 Ohm .063W
CH4_R65	SM652061430	Res Chip 1% 43.2 Ohm .063W
CH4_R66	SM652061201	Res Chip 1% 200 Ohm .063W
CH4_R67	SM652061330	Res Chip 1% 33.0 Ohm .063W
CH4_R70	SM655040024	Res Chip .5% 50ppm 300K 150V
CH4_R71	SM655040024	Res Chip .5% 50ppm 300K 150V

Part #: 901586-00 Description: 2 GHz 5GS/s 4 Channel Acquisition Board

Location	Part Number	Description
CH4_R72	SM652061131	Res Chip 1% 130 Ohm .063W
CH4_R73	SM185457102	Res Vari Cermet 1 K
CH4_R76	SM661207104	Cap Cera Chip 20 % .1 UF
CH4_R81	SM652061510	Res Chip 1% 51.0 Ohm .063W
CH4_R82	SM655040024	Res Chip .5% 50ppm 300K 150V
CH4_R83	SM652061510	Res Chip 1% 51.0 Ohm .063W
CH4_R84	SM652061203	Res Chip 1% 20K Ohm .063W
CH4_R85	SM652061562	Res Chip 1% 5.6K Ohm .063W
CH4_R90	SM652061273	Res Chip 1% 27K Ohm .063W
CH4_R91	SM652061273	Res Chip 1% 27K Ohm .063W
CH4_R92	SM652061121	Res Chip 1% 120 Ohm .063W
CH4_R93	SM652061271	Res Chip 1% 270 Ohm .063W
CH4_R94	SM652061271	Res Chip 1% 270 Ohm .063W
CH4_R95	SM655040025	Res Chip .5% 50ppm 110K 150V
CH4_R96	SM652061390	Res Chip 1% 39.0 Ohm .063W
CH4_R97	SM652061390	Res Chip 1% 39.0 Ohm .063W
CH4_R98	SM652061390	Res Chip 1% 39.0 Ohm .063W
CH4_R99	SM652061361	Res Chip 1% 360 Ohm .063W
CH4_R100	SM652061510	Res Chip 1% 51.0 Ohm .063W
CH4_R101	SM652061510	Res Chip 1% 51.0 Ohm .063W
CH4_R103	SM652061112	Res Chip 1% 1.1K Ohm .063W
CH4_R104	SM655030040	Res Thk Film +/-1% 5.11 Ohm .1
CH4_R105	SM652061102	Res Chip 1% 1.0K Ohm .063W
CH4_R106	SM652061471	Res Chip 1% 470 Ohm .063W
CH4_R107	SM652061510	Res Chip 1% 51.0 Ohm .063W
CH4_R108	SM652061361	Res Chip 1% 360 Ohm .063W
CH4_R109	SM652061102	Res Chip 1% 1.0K Ohm .063W
CH4_R110	SM652061100	Res Chip 1% 10.0 Ohm .063W
CH4_R111	SM652061390	Res Chip 1% 39.0 Ohm .063W
CH4_R112	SM652061393	Res Chip 1% 39K Ohm .063W
CH4_R113	SM652061201	Res Chip 1% 200 Ohm .063W
CH4_R114	SM652061330	Res Chip 1% 33.0 Ohm .063W
CH4_R115	SM652061361	Res Chip 1% 360 Ohm .063W
CH4_R116	SM652061751	Res Chip 1% 750 Ohm .063W
CH4_R118	SM655020025	Res Thk Film 1% 2.74 Ohm 1/16W
CH4_R119	SM655020025	Res Thk Film 1% 2.74 Ohm 1/16W
CH4_R120	SM655020025	Res Thk Film 1% 2.74 Ohm 1/16W
CH4_R121	SM655020025	Res Thk Film 1% 2.74 Ohm 1/16W
CH4_R128	SM652061000	Res Chip 0 Ohm Jumper
CH4_R129	SM652061201	Res Chip 1% 200 Ohm .063W
CH4_R130	SM652061240	Res Chip 1% 24.0 Ohm .063W
CH4_R131	SM652061390	Res Chip 1% 39.0 Ohm .063W
CH4_R132	SM652061390	Res Chip 1% 39.0 Ohm .063W
CH4_R133	SM652061105	Res Chip 1% 1.0M Ohm .063W

Part #: 901586-00 Description: 2 GHz 5GS/s 4 Channel Acquisition Board

Location	Part Number	Description
CH4_R134	SM655020017	Res Thk Film 1% 1K Ohm 1/16W
CH4_R135	SM655020017	Res Thk Film 1% 1K Ohm 1/16W
CH4_R136	SM655020017	Res Thk Film 1% 1K Ohm 1/16W
CH4_R137	SM655020017	Res Thk Film 1% 1K Ohm 1/16W
CH4_R138	SM655020017	Res Thk Film 1% 1K Ohm 1/16W
CH4_R139	SM655020017	Res Thk Film 1% 1K Ohm 1/16W
CH4_R141	SM655030040	Res Thk Film +/-1% 5.11 Ohm .1
CH4_R142	SM652061512	Res Chip 1% 5.1K Ohm .063W
CH4_R200	SM652061121	Res Chip 1% 120 Ohm .063W
CH4_RL1	SM430530001	Relay Smd Dual Form C 5V
CH4_RL2	SM430530001	Relay Smd Dual Form C 5V
CH4_RL3	430500003	20DB Attenuator Relay DC-3GHZ
CH4_RL4	SM430530001	Relay Smd Dual Form C 5V
CH4_RL7	SM431030005	Relay SPDT HF 50 Ohm 4.5V
CH4_RL8	SM430530001	Relay Smd Dual Form C 5V
CH4_U1	HFE653B	Front End Amplifier
CH4_U5	SM207231654	IC Dual 14-Bit Serial Dac
CH4_U6	SM289772003	Transistor Array 2003
CH4_U8	SM207770442	IC Analog Switch DG442
CH4_U9	SM208470705	IC OP Amp Picoamp Input AD705
CH4_U10	SM208450686	IC Wideband OP Amp OPA686
CH4_U12	SM208472022	Opamp, Dual, Low Pwr TLE2022C
CH4_U13	SM205616001	IC 8-Bit Shift Reg 74LV594ADR
CH4_U14	SM208475460	IC OP Amp Sin-Sup RtoR Ins Amp
CH4_U15	SM208470705	IC OP Amp Picoamp Input AD705
CH4_U50	SM208701023	IC Temperature Sensor
CH4_U51	SM208701023	IC Temperature Sensor
CH4_U81	901686-00	Lower front end EMI shield
CH4_U82	901685-00	Upper front end EMI shield
CH5_C1	SM668010335	Cap,tant 3.3UF/10V 20% L/Esr
CH5_C2	SM652061121	Res Chip 1% 120 Ohm .063W
CH5_C4	SM661540056	Cap Cera Chip 5.6PF 500V
CH5_C6	SM661066102	Cap Cera Chip 10% 1000PF/50V
CH5_C7	SM662212001	Cap Cera .015uF 10% 25V X7R
CH5_C9	SM661068104	Cap Cera Chip 0.1uF 0603
CH5_C10	SM661066102	Cap Cera Chip 10% 1000PF/50V
CH5_C11	SM661066102	Cap Cera Chip 10% 1000PF/50V
CH5_C12	SM661068104	Cap Cera Chip 0.1uF 0603
CH5_C13	SM661068104	Cap Cera Chip 0.1uF 0603
CH5_C14	SM661068104	Cap Cera Chip 0.1uF 0603
CH5_C15	SM661068104	Cap Cera Chip 0.1uF 0603
CH5_C16	SM661068104	Cap Cera Chip 0.1uF 0603
CH5_C17	SM661028100	Cap Cera Chip 1UF 10V
CH5_C18	SM661068104	Cap Cera Chip 0.1uF 0603

Part #: 901586-00 Description: 2 GHz 5GS/s 4 Channel Acquisition Board

Location	Part Number	Description
CH5_C19	SM661066102	Cap Cera Chip 10% 1000PF/50V
CH5_C21	SM661066102	Cap Cera Chip 10% 1000PF/50V
CH5_C22	SM661207223	Cap Cera Chip 20% .022 UF
CH5_C23	SM661068104	Cap Cera Chip 0.1uF 0603
CH5_C24	SM662382001	Cap Cera 1000pF 10% 500V X7R
CH5_C25	SM158070200	Cap Variable 4.5-20.0 PF
CH5_C26	SM661540056	Cap Cera Chip 5.6PF 500V
CH5_C27	SM661066102	Cap Cera Chip 10% 1000PF/50V
CH5_C31	SM662241001	Cap Cera 22pF +/- 5% 100V Npo
CH5_C32	SM661073068	Cap Cera 6.8+/- 0.1PF 50V Npo
CH5_C33	SM661066102	Cap Cera Chip 10% 1000PF/50V
CH5_C34	SM668025334	Cap,tant .33UF/25V 20% L/Esr
CH5_C35	SM661068104	Cap Cera Chip 0.1uF 0603
CH5_C36	SM661068104	Cap Cera Chip 0.1uF 0603
CH5_C37	SM661066102	Cap Cera Chip 10% 1000PF/50V
CH5_C39	SM661068104	Cap Cera Chip 0.1uF 0603
CH5_C40	SM661068104	Cap Cera Chip 0.1uF 0603
CH5_C41	SM661068104	Cap Cera Chip 0.1uF 0603
CH5_C45	SM662131003	Cap Cera Chip 5% 50V .01 UF
CH5_C46	SM662131003	Cap Cera Chip 5% 50V .01 UF
CH5_C47	SM662131003	Cap Cera Chip 5% 50V .01 UF
CH5_C48	SM662131003	Cap Cera Chip 5% 50V .01 UF
CH5_C49	SM662131003	Cap Cera Chip 5% 50V .01 UF
CH5_C50	SM662131003	Cap Cera Chip 5% 50V .01 UF
CH5_C51	SM661068104	Cap Cera Chip 0.1uF 0603
CH5_C53	SM661068104	Cap Cera Chip 0.1uF 0603
CH5_C54	SM661068104	Cap Cera Chip 0.1uF 0603
CH5_C55	SM661066102	Cap Cera Chip 10% 1000PF/50V
CH5_C56	SM661066102	Cap Cera Chip 10% 1000PF/50V
CH5_C57	SM661068104	Cap Cera Chip 0.1uF 0603
CH5_C59	SM158070200	Cap Variable 4.5-20.0 PF
CH5_C60	SM661540056	Cap Cera Chip 5.6PF 500V
CH5_C61	SM661066102	Cap Cera Chip 10% 1000PF/50V
CH5_C62	SM661028100	Cap Cera Chip 1UF 10V
CH5_C63	SM661028100	Cap Cera Chip 1UF 10V
CH5_C64	SM661068104	Cap Cera Chip 0.1uF 0603
CH5_C65	SM661066102	Cap Cera Chip 10% 1000PF/50V
CH5_C66	SM661066102	Cap Cera Chip 10% 1000PF/50V
CH5_C67	SM661068104	Cap Cera Chip 0.1uF 0603
CH5_C68	SM661068104	Cap Cera Chip 0.1uF 0603
CH5_C69	SM661068104	Cap Cera Chip 0.1uF 0603
CH5_C70	SM661068104	Cap Cera Chip 0.1uF 0603
CH5_C71	SM661068104	Cap Cera Chip 0.1uF 0603
CH5_C73	SM661068104	Cap Cera Chip 0.1uF 0603

Part #: 901586-00 Description: 2 GHz 5GS/s 4 Channel Acquisition Board

Location	Part Number	Description
CH5_C74	SM661207104	Cap Cera Chip 20 % .1 UF
CH5_C75	SM662131003	Cap Cera Chip 5% 50V .01 UF
CH5_C76	SM661066102	Cap Cera Chip 10% 1000PF/50V
CH5_C81	SM662152001	Cap Cera Chip 10% 16V 100nF
CH5_C82	SM662152001	Cap Cera Chip 10% 16V 100nF
CH5_C85	SM158011000	Cap Variable .5PF-1.3PF Npo CE
CH5_C88	SM661073300	Cap Cera 30PF+/- 5% 50V Npo
CH5_C89	SM661073068	Cap Cera 6.8+/- 0.1PF 50V Npo
CH5_C90	SM661066102	Cap Cera Chip 10% 1000PF/50V
CH5_C91	SM661066102	Cap Cera Chip 10% 1000PF/50V
CH5_C92	SM158011000	Cap Variable .5PF-1.3PF Npo CE
CH5_C95	SM662131003	Cap Cera Chip 5% 50V .01 UF
CH5_C96	SM668025334	Cap,tant .33UF/25V 20% L/Esr
CH5_C97	SM668010335	Cap,tant 3.3UF/10V 20% L/Esr
CH5_C98	SM668010335	Cap,tant 3.3UF/10V 20% L/Esr
CH5_C99	SM662252001	Cap Cera .068uF 10% 16V X7R
CH5_C100	SM661068104	Cap Cera Chip 0.1uF 0603
CH5_C200	SM661068104	Cap Cera Chip 0.1uF 0603
CH5_CR1	SM232442828	Diode Bridge HSMS2828
CH5_CR2	SM229020150	MLC Trans Volt Suppressor
CH5_CR3	SM252023304	Dual Pin Diode Silicon Bar 63-
CH5_CR4	SM252005303	Pin Diode Bar 63-03W
CH5_CR5	SM252005303	Pin Diode Bar 63-03W
CH5_CR6	SM252023066	Pin Diode Bar 66
CH5_CR7	SM252023066	Pin Diode Bar 66
CH5_CR8	SM252023066	Pin Diode Bar 66
CH5_CR10	SM236030099	Diode SO-Pkg BAV99
CH5_CR11	SM232030001	Diode Array Schottky HSMS-282C
CH5_CR12	SM232030001	Diode Array Schottky HSMS-282C
CH5_CR13	SM252023066	Pin Diode Bar 66
CH5_J3A	7093XXP01	Right Angle Recept. Connector
CH5_J3B	709614300	Bulkhead Receptical Female Bnc
CH5_L1	SM301004001	Bead Ferrite 50 Ohms 3AMPS 120
CH5_L2	SM301004001	Bead Ferrite 50 Ohms 3AMPS 120
CH5_L3	SM301004001	Bead Ferrite 50 Ohms 3AMPS 120
CH5_L4	SM301004001	Bead Ferrite 50 Ohms 3AMPS 120
CH5_L18	SM301004001	Bead Ferrite 50 Ohms 3AMPS 120
CH5_L20	SM301004001	Bead Ferrite 50 Ohms 3AMPS 120
CH5_L28	SM301004001	Bead Ferrite 50 Ohms 3AMPS 120
CH5_L29	SM301004001	Bead Ferrite 50 Ohms 3AMPS 120
CH5_L30	SM652041000	Res Zero ohms
CH5_L31	SM652041000	Res Zero ohms
CH5_L32	SM652041000	Res Zero ohms
CH5_L33	SM652041000	Res Zero ohms

Part #: 901586-00 Description: 2 GHz 5GS/s 4 Channel Acquisition Board

Location	Part Number	Description
CH5_Q1	SM270050520	NPN 9GHZ Wideband Transistor
CH5_Q2	SM270050520	NPN 9GHZ Wideband Transistor
CH5_Q9	SM270050520	NPN 9GHZ Wideband Transistor
CH5_Q10	SM275030550	Transistor Pnp BF550
CH5_Q11	SM280122416	Trans. Jfet N MMBF4416/LC6A
CH5_R1	SM652061101	Res Chip 1% 100 Ohm .063W
CH5_R2	SM652061103	Res Chip 1% 10K Ohm .063W
CH5_R3	SM652061103	Res Chip 1% 10K Ohm .063W
CH5_R4	SM652061102	Res Chip 1% 1.0K Ohm .063W
CH5_R5	SM652061681	Res Chip 1% 681 Ohm .063W
CH5_R6	SM652061000	Res Chip 0 Ohm Jumper
CH5_R7	SM652061203	Res Chip 1% 20K Ohm .063W
CH5_R8	SM652061432	Res Chip 1% 4.3K Ohm .063W
CH5_R9	SM652061394	Res Chip 1% 390K Ohm .063W
CH5_R10	SM655040022	Res Chip .5% 50ppm 180K 150V
CH5_R15	SM652061432	Res Chip 1% 4.3K Ohm .063W
CH5_R16	SM652061102	Res Chip 1% 1.0K Ohm .063W
CH5_R17	SM652061101	Res Chip 1% 100 Ohm .063W
CH5_R18	SM655040024	Res Chip .5% 50ppm 300K 150V
CH5_R19	SM655040024	Res Chip .5% 50ppm 300K 150V
CH5_R20	SM655040023	Res Chip .5% 50ppm 240K 150V
CH5_R21	SM652061000	Res Chip 0 Ohm Jumper
CH5_R22	SM652061390	Res Chip 1% 39.0 Ohm .063W
CH5_R23	SM652061121	Res Chip 1% 120 Ohm .063W
CH5_R27	SM652061393	Res Chip 1% 39K Ohm .063W
CH5_R28	SM652041011	Res Chip 1% 49.9 Ohms
CH5_R29	SM652061393	Res Chip 1% 39K Ohm .063W
CH5_R30	SM652000005	Res RF 100 Ohm .25% 1/3W 1206
CH5_R31	SM652000005	Res RF 100 Ohm .25% 1/3W 1206
CH5_R32	SM652061103	Res Chip 1% 10K Ohm .063W
CH5_R33	SM652061203	Res Chip 1% 20K Ohm .063W
CH5_R34	SM655040024	Res Chip .5% 50ppm 300K 150V
CH5_R35	SM655040024	Res Chip .5% 50ppm 300K 150V
CH5_R36	SM652061273	Res Chip 1% 27K Ohm .063W
CH5_R37	SM652061273	Res Chip 1% 27K Ohm .063W
CH5_R38	SM185457503	Res Vari Cermet 50 K
CH5_R39	SM652061271	Res Chip 1% 270 Ohm .063W
CH5_R40	SM652061271	Res Chip 1% 270 Ohm .063W
CH5_R41	SM652061271	Res Chip 1% 270 Ohm .063W
CH5_R42	SM652061271	Res Chip 1% 270 Ohm .063W
CH5_R43	SM652061121	Res Chip 1% 120 Ohm .063W
CH5_R44	SM652061222	Res Chip 1% 2.2K Ohm .063W
CH5_R45	SM652061510	Res Chip 1% 51.0 Ohm .063W
CH5_R46	SM652061824	Res Chip 1% 820K Ohm .063W

Part #: 901586-00 Description: 2 GHz 5GS/s 4 Channel Acquisition Board

Location	Part Number	Description
CH5_R47	SM652061390	Res Chip 1% 39.0 Ohm .063W
CH5_R48	SM655040024	Res Chip .5% 50ppm 300K 150V
CH5_R49	SM652061161	Res Chip 1% 160 Ohm .063W
CH5_R50	SM652061161	Res Chip 1% 160 Ohm .063W
CH5_R51	SM652061161	Res Chip 1% 160 Ohm .063W
CH5_R52	SM652061102	Res Chip 1% 1.0K Ohm .063W
CH5_R53	SM652061154	Res Chip 1% 150K Ohm .063W
CH5_R54	SM652061201	Res Chip 1% 200 Ohm .063W
CH5_R55	SM655030042	Res Thk Film 1% 5.6M Ohm 1/16W
CH5_R56	SM652061240	Res Chip 1% 24.0 Ohm .063W
CH5_R57	SM652061101	Res Chip 1% 100 Ohm .063W
CH5_R59	SM652061361	Res Chip 1% 360 Ohm .063W
CH5_R60	SM652061393	Res Chip 1% 39K Ohm .063W
CH5_R61	SM655040025	Res Chip .5% 50ppm 110K 150V
CH5_R62	SM652061112	Res Chip 1% 1.1K Ohm .063W
CH5_R63	SM652061106	Res Chip 1% 10M Ohm .063W
CH5_R64	SM652061100	Res Chip 1% 10.0 Ohm .063W
CH5_R65	SM652061430	Res Chip 1% 43.2 Ohm .063W
CH5_R66	SM652061201	Res Chip 1% 200 Ohm .063W
CH5_R67	SM652061330	Res Chip 1% 33.0 Ohm .063W
CH5_R70	SM655040024	Res Chip .5% 50ppm 300K 150V
CH5_R71	SM655040024	Res Chip .5% 50ppm 300K 150V
CH5_R72	SM652061131	Res Chip 1% 130 Ohm .063W
CH5_R73	SM185457102	Res Vari Cermet 1 K
CH5_R76	SM661207104	Cap Cera Chip 20 % .1 UF
CH5_R81	SM652061510	Res Chip 1% 51.0 Ohm .063W
CH5_R82	SM655040024	Res Chip .5% 50ppm 300K 150V
CH5_R83	SM652061510	Res Chip 1% 51.0 Ohm .063W
CH5_R84	SM652061203	Res Chip 1% 20K Ohm .063W
CH5_R85	SM652061562	Res Chip 1% 5.6K Ohm .063W
CH5_R90	SM652061273	Res Chip 1% 27K Ohm .063W
CH5_R91	SM652061273	Res Chip 1% 27K Ohm .063W
CH5_R92	SM652061121	Res Chip 1% 120 Ohm .063W
CH5_R93	SM652061271	Res Chip 1% 270 Ohm .063W
CH5_R94	SM652061271	Res Chip 1% 270 Ohm .063W
CH5_R95	SM655040025	Res Chip .5% 50ppm 110K 150V
CH5_R96	SM652061390	Res Chip 1% 39.0 Ohm .063W
CH5_R97	SM652061390	Res Chip 1% 39.0 Ohm .063W
CH5_R98	SM652061390	Res Chip 1% 39.0 Ohm .063W
CH5_R99	SM652061361	Res Chip 1% 360 Ohm .063W
CH5_R100	SM652061510	Res Chip 1% 51.0 Ohm .063W
CH5_R101	SM652061510	Res Chip 1% 51.0 Ohm .063W
CH5_R103	SM652061112	Res Chip 1% 1.1K Ohm .063W
CH5_R104	SM655030040	Res Thk Film +/-1% 5.11 Ohm .1

Part #: 901586-00 Description: 2 GHz 5GS/s 4 Channel Acquisition Board

Location	Part Number	Description
CH5_R105	SM652061102	Res Chip 1% 1.0K Ohm .063W
CH5_R106	SM652061471	Res Chip 1% 470 Ohm .063W
CH5_R107	SM652061510	Res Chip 1% 51.0 Ohm .063W
CH5_R108	SM652061361	Res Chip 1% 360 Ohm .063W
CH5_R109	SM652061102	Res Chip 1% 1.0K Ohm .063W
CH5_R110	SM652061100	Res Chip 1% 10.0 Ohm .063W
CH5_R111	SM652061390	Res Chip 1% 39.0 Ohm .063W
CH5_R112	SM652061393	Res Chip 1% 39K Ohm .063W
CH5_R113	SM652061201	Res Chip 1% 200 Ohm .063W
CH5_R114	SM652061330	Res Chip 1% 33.0 Ohm .063W
CH5_R115	SM652061361	Res Chip 1% 360 Ohm .063W
CH5_R116	SM652061751	Res Chip 1% 750 Ohm .063W
CH5_R120	SM655020025	Res Thk Film 1% 2.74 Ohm 1/16W
CH5_R121	SM655020025	Res Thk Film 1% 2.74 Ohm 1/16W
CH5_R128	SM652061000	Res Chip 0 Ohm Jumper
CH5_R129	SM652061201	Res Chip 1% 200 Ohm .063W
CH5_R130	SM652061240	Res Chip 1% 24.0 Ohm .063W
CH5_R131	SM652061390	Res Chip 1% 39.0 Ohm .063W
CH5_R132	SM652061390	Res Chip 1% 39.0 Ohm .063W
CH5_R133	SM652061105	Res Chip 1% 1.0M Ohm .063W
CH5_R134	SM655020017	Res Thk Film 1% 1K Ohm 1/16W
CH5_R135	SM655020017	Res Thk Film 1% 1K Ohm 1/16W
CH5_R136	SM655020017	Res Thk Film 1% 1K Ohm 1/16W
CH5_R137	SM655020017	Res Thk Film 1% 1K Ohm 1/16W
CH5_R138	SM655020017	Res Thk Film 1% 1K Ohm 1/16W
CH5_R139	SM655020017	Res Thk Film 1% 1K Ohm 1/16W
CH5_R141	SM655030040	Res Thk Film +/-1% 5.11 Ohm .1
CH5_R220	SM655080009	Res Thk Film 0.5% 41.2 Ohm 1W
CH5_R221	SM655040026	Res Thk Film 41.2 Ohm .5% 1/8W
CH5_R223	SM655040027	Res Thk Film 20 Ohm .5% 1/8W
CH5_R224	SM655040027	Res Thk Film 20 Ohm .5% 1/8W
CH5_R225	SM652061512	Res Chip 1% 5.1K Ohm .063W
CH5_R226	SM652061912	Res Chip 1% 9.1K Ohm .063W
CH5_RL1	SM430530001	Relay Smd Dual Form C 5V
CH5_RL2	SM430530001	Relay Smd Dual Form C 5V
CH5_RL4	SM430530001	Relay Smd Dual Form C 5V
CH5_RL6	SM431030005	Relay SPDT HF 50 Ohm 4.5V
CH5_RL7	SM430530001	Relay Smd Dual Form C 5V
CH5_U1	HFE653B	Front End Amplifier
CH5_U5	SM207010011	IC Quad 10-Bit DAC LTC1664
CH5_U6	SM289772003	Transistor Array 2003
CH5_U8	SM207770442	IC Analog Switch DG442
CH5_U9	SM208470705	IC OP Amp Picoamp Input AD705
CH5_U10	SM208450686	IC Wideband OP Amp OPA686

Part #: 901586-00 Description: 2 GHz 5GS/s 4 Channel Acquisition Board

Location	Part Number	Description
CH5_U12	SM208472022	Opamp, Dual, Low Pwr TLE2022C
CH5_U13	SM205616001	IC 8-Bit Shift Reg 74LV594ADR
CH5_U14	SM208475460	IC OP Amp Sin-Sup RtoR Ins Amp
CH5_U15	SM208470705	IC OP Amp Picoamp Input AD705
CH5_U50	SM208701023	IC Temperature Sensor
CH5_U51	SM208701023	IC Temperature Sensor
CH5_U55	SM661068104	Cap Cera Chip 0.1uF 0603
CH5_U82	901686-00	Lower front end EMI shield
CH5_U83	901685-00	Upper front end EMI shield
CL_C1	SM661073820	Cap Cera 82PF+/- 5% 50V Npo
CL_C3	SM662232001	10000pf 0603 capacitor
CL_C4	SM662232001	10000pf 0603 capacitor
CL_C5	SM661073820	Cap Cera 82PF+/- 5% 50V Npo
CL_C6	SM662232001	10000pf 0603 capacitor
CL_C7	SM662232001	10000pf 0603 capacitor
CL_C9	SM661073820	Cap Cera 82PF+/- 5% 50V Npo
CL_C11	SM662232001	10000pf 0603 capacitor
CL_C12	SM661073820	Cap Cera 82PF+/- 5% 50V Npo
CL_C13	SM662232001	10000pf 0603 capacitor
CL_C14	SM661073820	Cap Cera 82PF+/- 5% 50V Npo
CL_C15	SM661068104	Cap Cera Chip 0.1uF 0603
CL_C16	SM661068104	Cap Cera Chip 0.1uF 0603
CL_C17	SM661073331	Cap Cera 330PF+/- 5% 50V Npo
CL_C18	SM662232001	10000pf 0603 capacitor
CL_C19	SM662232001	10000pf 0603 capacitor
CL_C21	SM661073331	Cap Cera 330PF+/- 5% 50V Npo
CL_C22	SM661073331	Cap Cera 330PF+/- 5% 50V Npo
CL_C23	SM661068104	Cap Cera Chip 0.1uF 0603
CL_C24	SM661068104	Cap Cera Chip 0.1uF 0603
CL_C25	SM661068104	Cap Cera Chip 0.1uF 0603
CL_C26	SM661068104	Cap Cera Chip 0.1uF 0603
CL_C27	SM661207104	Cap Cera Chip 20 % .1 UF
CL_C28	SM661073820	Cap Cera 82PF+/- 5% 50V Npo
CL_C29	SM661073820	Cap Cera 82PF+/- 5% 50V Npo
CL_C31	SM661068104	Cap Cera Chip 0.1uF 0603
CL_C32	SM668016226	Cap tant 22UF/16V 20 % L Esr
CL_C33	SM662412001	Cap Cera 0.47uF 10% 25V X7R
CL_C35	SM661068104	Cap Cera Chip 0.1uF 0603
CL_C36	SM661068104	Cap Cera Chip 0.1uF 0603
CL_C38	SM661068104	Cap Cera Chip 0.1uF 0603
CL_C39	SM661068104	Cap Cera Chip 0.1uF 0603
CL_C40	SM661068104	Cap Cera Chip 0.1uF 0603
CL_C41	SM668016226	Cap tant 22UF/16V 20 % L Esr
CL_C42	SM662432001	Cap Cera 4700pF 10% 50V X7R

Part #: 901586-00 Description: 2 GHz 5GS/s 4 Channel Acquisition Board

Location	Part Number	Description
CL_C43	SM661068104	Cap Cera Chip 0.1uF 0603
CL_C44	SM661068104	Cap Cera Chip 0.1uF 0603
CL_C45	SM661068104	Cap Cera Chip 0.1uF 0603
CL_C46	SM661207104	Cap Cera Chip 20 % .1 UF
CL_C47	SM661207104	Cap Cera Chip 20 % .1 UF
CL_C48	SM668025106	Cap,tant 10UF/25V 20% L Esr
CL_C49	SM668025106	Cap,tant 10UF/25V 20% L Esr
CL_C50	SM668016226	Cap tant 22UF/16V 20 % L Esr
CL_C51	SM661207104	Cap Cera Chip 20 % .1 UF
CL_C52	SM668016226	Cap tant 22UF/16V 20 % L Esr
CL_C53	SM666267227	Cap Tant 220UF 10V 20%
CL_C54	SM666267227	Cap Tant 220UF 10V 20%
CL_C55	SM668016226	Cap tant 22UF/16V 20 % L Esr
CL_C56	SM668016226	Cap tant 22UF/16V 20 % L Esr
CL_C57	SM666267227	Cap Tant 220UF 10V 20%
CL_C58	SM666267227	Cap Tant 220UF 10V 20%
CL_C59	SM666267227	Cap Tant 220UF 10V 20%
CL_C60	SM666267227	Cap Tant 220UF 10V 20%
CL_C61	SM668016226	Cap tant 22UF/16V 20 % L Esr
CL_C62	SM666267227	Cap Tant 220UF 10V 20%
CL_C63	SM666267227	Cap Tant 220UF 10V 20%
CL_L1	SM301001002	Bead SHF 0.3A
CL_L2	SM301001002	Bead SHF 0.3A
CL_L3	SM301001002	Bead SHF 0.3A
CL_L4	SM301001002	Bead SHF 0.3A
CL_L5	SM301001017	Inductor Chip 10% 15uH 1210
CL_L6	SM301004001	Bead Ferrite 50 Ohms 3AMPS 120
CL_L7	SM301004001	Bead Ferrite 50 Ohms 3AMPS 120
CL_L9	SM301001017	Inductor Chip 10% 15uH 1210
CL_L10	SM301001018	Inductor Shielded 100uH 10%
CL_L11	SM301004001	Bead Ferrite 50 Ohms 3AMPS 120
CL_L12	SM301001017	Inductor Chip 10% 15uH 1210
CL_L13	SM301001002	Bead SHF 0.3A
CL_L14	SM301004001	Bead Ferrite 50 Ohms 3AMPS 120
CL_L15	SM301004001	Bead Ferrite 50 Ohms 3AMPS 120
CL_L16	SM301004001	Bead Ferrite 50 Ohms 3AMPS 120
CL_L17	SM301001002	Bead SHF 0.3A
CL_M1	901790-00	S65 CLOCK EMI SHIELD 0.4 IN. H
CL_M2	901622-00	EMI shield - 10 GHZ clock
CL_M3	901790-00	S65 CLOCK EMI SHIELD 0.4 IN. H
CL_M4	901609-00	EMI Shield
CL_P31	SM185457201	Res Vari Cermet 200 Ohms
CL_Q1	SM270330848	Transistor Npn BC848C
CL_Q2	SM275132907	Transistor Pnp 2907A

Part #: 901586-00 Description: 2 GHz 5GS/s 4 Channel Acquisition Board

Location	Part Number	Description
CL_Q3	SM270130092	Transistor Npn BFR92A
CL_R1	SM655080005	Res Thk Film 1% 105 Ohm 1/2W
CL_R2	SM655080005	Res Thk Film 1% 105 Ohm 1/2W
CL_R3	SM653101410	Res Chip 1% 1.50 K
CL_R4	SM652061271	Res Chip 1% 270 Ohm .063W
CL_R5	SM652061393	Res Chip 1% 39K Ohm .063W
CL_R6	SM655080005	Res Thk Film 1% 105 Ohm 1/2W
CL_R7	SM655080005	Res Thk Film 1% 105 Ohm 1/2W
CL_R11	SM655080005	Res Thk Film 1% 105 Ohm 1/2W
CL_R12	SM655080005	Res Thk Film 1% 105 Ohm 1/2W
CL_R16	SM652061101	Res Chip 1% 100 Ohm .063W
CL_R17	SM652061271	Res Chip 1% 270 Ohm .063W
CL_R18	SM652061200	Res Chip 1% 20.0 Ohm .063W
CL_R19	SM652061271	Res Chip 1% 270 Ohm .063W
CL_R20	SM655080005	Res Thk Film 1% 105 Ohm 1/2W
CL_R21	SM652061101	Res Chip 1% 100 Ohm .063W
CL_R22	SM652061103	Res Chip 1% 10K Ohm .063W
CL_R23	SM652061103	Res Chip 1% 10K Ohm .063W
CL_R26	SM652061332	Res Chip 1% 3.3K Ohm .063W
CL_R27	SM652061332	Res Chip 1% 3.3K Ohm .063W
CL_R28	SM652061332	Res Chip 1% 3.3K Ohm .063W
CL_R29	SM653101326	Res Chip 1% 200 Ohms
CL_R30	SM653101262	Res Chip 1% 43.2 Ohms
CL_R32	SM652101302	Res Chip (E24) 1% 3 K
CL_R33	SM653101297	Res Chip 1% 100 Ohms
CL_R36	SM652061332	Res Chip 1% 3.3K Ohm .063W
CL_R37	SM655080004	Res Thk Film 1 Ohm +/- 5% 1/2W
CL_R38	SM653101334	Res Chip 1% 243 Ohms
CL_R39	SM653101410	Res Chip 1% 1.50 K
CL_R40	SM652061332	Res Chip 1% 3.3K Ohm .063W
CL_R42	SM653101410	Res Chip 1% 1.50 K
CL_R43	SM653101377	Res Chip 1% 681 Ohms
CL_R44	SM652061221	Res Chip 1% 220 Ohm .063W
CL_R45	SM653101377	Res Chip 1% 681 Ohms
CL_R46	SM652061221	Res Chip 1% 220 Ohm .063W
CL_R47	SM652061751	Res Chip 1% 750 Ohm .063W
CL_R50	SM653101410	Res Chip 1% 1.50 K
CL_R51	SM652061103	Res Chip 1% 10K Ohm .063W
CL_R52	SM655080005	Res Thk Film 1% 105 Ohm 1/2W
CL_T1	SM301001016	Inductor Pwr Toroid 272uH .36A
CL_T2	SM301001016	Inductor Pwr Toroid 272uH .36A
CL_T3	SM301001016	Inductor Pwr Toroid 272uH .36A
CL_T4	SM301001016	Inductor Pwr Toroid 272uH .36A
CL_U5	SM200588014	Hex Schmitt-Trig Inv 74HCT14

Part #: 901586-00 Description: 2 GHz 5GS/s 4 Channel Acquisition Board

Location	Part Number	Description
CL_U6	SM208400001	IC MMIC Amplifier 12GHz NBB-30
CL_U7	SM208400001	IC MMIC Amplifier 12GHz NBB-30
CL_U8	SM208400001	IC MMIC Amplifier 12GHz NBB-30
CL_U11	SM311000006	Voltage Controlled Oscillator
CL_U12	SM208550004	IC Volt Reg Pos Adjust LDO
CL_U13	SM208550004	IC Volt Reg Pos Adjust LDO
CL_U14	SM208550004	IC Volt Reg Pos Adjust LDO
CL_U15	SM202100004	IC PLL Freq Synth 4106 6 GHz
CL_U17	309000010	Crystal Oscillator 10MHZ 9PPM
CL_U19	SM208400002	IC MMIC Amplifier 8GHz NBB-400
CR52	SM232022824	Diode Array Schottky HSMS2824
CR53	SM236030099	Diode SO-Pkg BAV99
CR54	SM236030099	Diode SO-Pkg BAV99
CR55	SM256232013	Diode Light Emitting Red
CR56	SM236030099	Diode SO-Pkg BAV99
CR57	SM236030099	Diode SO-Pkg BAV99
CR58	SM236030099	Diode SO-Pkg BAV99
F1	SM433695250	PTC Resettable Device 2.5A
HS1	SM507000002	Heatsink Surface Mount TO-263
HS2	SM507000002	Heatsink Surface Mount TO-263
J1	454312010	Hdr Sold Tail/Male 10
J4	454117003	Friction Header Straight .1 CE
J8	402120004	Conn RT Angle Fem Bnc
J10	SM454204040	Hdr Male 40 Pos Idc
J11	SM454204040	Hdr Male 40 Pos Idc
J12	454312010	Hdr Sold Tail/Male 10
J13	454312010	Hdr Sold Tail/Male 10
J14	SM453005001	Header 1 x 5 Shrouded
J15	454022001	HEADER VERT 22 POS WIRE BD
J16	454117003	Friction Header Straight .1 CE
J17	454117003	Friction Header Straight .1 CE
J19	454016002	Conn Hdr Vert 16 Pos Wire-BD
J23	454000018	Hdr Sold Tail Male 18 Pin HI T
J24	SM453005001	Header 1 x 5 Shrouded
J25	SM453005001	Header 1 x 5 Shrouded
J26	454004002	Conn Receptacle USB R/A 4 Pos
L1	SM301004001	Bead Ferrite 50 Ohms 3AMPS 120
L2	SM301004001	Bead Ferrite 50 Ohms 3AMPS 120
L3	SM301001001	BEAD FERRITE
L4	SM301001001	BEAD FERRITE
L5	SM301001001	BEAD FERRITE
L6	SM301001001	BEAD FERRITE
L7	SM301004001	Bead Ferrite 50 Ohms 3AMPS 120
L8	SM301004001	Bead Ferrite 50 Ohms 3AMPS 120

Part #: 901586-00 Description: 2 GHz 5GS/s 4 Channel Acquisition Board

Location	Part Number	Description
L9	SM300092390	Inductor Wound 2% 39 NH
L10	SM300095151	Inductor Wound 150NH
L11	SM300095151	Inductor Wound 150NH
L12	SM301004001	Bead Ferrite 50 Ohms 3AMPS 120
L13	SM301004001	Bead Ferrite 50 Ohms 3AMPS 120
L14	SM301004001	Bead Ferrite 50 Ohms 3AMPS 120
L15	SM301001001	BEAD FERRITE
L16	SM301001001	BEAD FERRITE
L17	SM301001001	BEAD FERRITE
L18	SM301001001	BEAD FERRITE
L19	SM301004001	Bead Ferrite 50 Ohms 3AMPS 120
L20	SM301004001	Bead Ferrite 50 Ohms 3AMPS 120
L21	SM301004001	Bead Ferrite 50 Ohms 3AMPS 120
L22	SM301004001	Bead Ferrite 50 Ohms 3AMPS 120
L23	SM301001001	BEAD FERRITE
L24	SM301004001	Bead Ferrite 50 Ohms 3AMPS 120
L25	SM301001001	BEAD FERRITE
L26	SM301001001	BEAD FERRITE
L27	SM301004001	Bead Ferrite 50 Ohms 3AMPS 120
L28	SM301004001	Bead Ferrite 50 Ohms 3AMPS 120
L29	SM301001001	BEAD FERRITE
L30	SM301004001	Bead Ferrite 50 Ohms 3AMPS 120
L31	SM301004001	Bead Ferrite 50 Ohms 3AMPS 120
L32	SM301001001	BEAD FERRITE
L33	SM301001001	BEAD FERRITE
L34	SM301004001	Bead Ferrite 50 Ohms 3AMPS 120
L35	SM300600009	Inductor 9.3uH 7.2A Wound
L36	SM301001001	BEAD FERRITE
L37	SM301001001	BEAD FERRITE
L38	SM300600009	Inductor 9.3uH 7.2A Wound
L39	SM301004001	Bead Ferrite 50 Ohms 3AMPS 120
L40	SM301001001	BEAD FERRITE
L41	SM301004001	Bead Ferrite 50 Ohms 3AMPS 120
L42	SM301001001	BEAD FERRITE
L43	SM301001001	BEAD FERRITE
L44	SM301004001	Bead Ferrite 50 Ohms 3AMPS 120
L45	SM301004001	Bead Ferrite 50 Ohms 3AMPS 120
L46	SM301004001	Bead Ferrite 50 Ohms 3AMPS 120
L47	SM301004001	Bead Ferrite 50 Ohms 3AMPS 120
L48	SM301004001	Bead Ferrite 50 Ohms 3AMPS 120
P1	454312010	Hdr Sold Tail/Male 10
Q1	SM270130092	Transistor Npn BFR92A
Q2	SM208550004	IC Volt Reg Pos Adjust LDO
Q3	SM208550004	IC Volt Reg Pos Adjust LDO

Part #: 901586-00 Description: 2 GHz 5GS/s 4 Channel Acquisition Board

Location	Part Number	Description
Q4	SM270130092	Transistor Npn BFR92A
Q5	SM270130092	Transistor Npn BFR92A
Q6	SM270130092	Transistor Npn BFR92A
Q7	SM208550004	IC Volt Reg Pos Adjust LDO
Q8	SM270130092	Transistor Npn BFR92A
Q10	SM208550337	IC Volt Reg Adj LM337
Q11	SM280217505	Mosfet, Nchanel, 75A, 50V, D2P
R1	SM653101489	Res Chip 1 % 10.0 K
R2	SM653101422	Res Chip 1% 2.00 K
R3	SM653101410	Res Chip 1% 1.50 K
R4	SM653101410	Res Chip 1% 1.50 K
R5	SM653101410	Res Chip 1% 1.50 K
R6	SM653101422	Res Chip 1% 2.00 K
R7	SM653101422	Res Chip 1% 2.00 K
R8	SM653101354	Res Chip 1% 392 Ohms
R9	SM653101393	Res Chip 1% 1.00 K
R10	SM653101393	Res Chip 1% 1.00 K
R11	SM654101000	Chip Jumper Zero Ohms
R12	SM653101393	Res Chip 1% 1.00 K
R13	SM653101393	Res Chip 1% 1.00 K
R14	SM653101393	Res Chip 1% 1.00 K
R15	SM653101422	Res Chip 1% 2.00 K
R16	SM653101410	Res Chip 1% 1.50 K
R17	SM653101410	Res Chip 1% 1.50 K
R18	SM653101393	Res Chip 1% 1.00 K
R19	SM653101422	Res Chip 1% 2.00 K
R20	SM653101422	Res Chip 1% 2.00 K
R21	SM653101422	Res Chip 1% 2.00 K
R22	SM653101422	Res Chip 1% 2.00 K
R23	SM653101422	Res Chip 1% 2.00 K
R24	SM653101422	Res Chip 1% 2.00 K
R25	SM653101422	Res Chip 1% 2.00 K
R26	SM653101422	Res Chip 1% 2.00 K
R27	SM653101334	Res Chip 1% 243 Ohms
R28	SM653101297	Res Chip 1% 100 Ohms
R29	SM653101297	Res Chip 1% 100 Ohms
R30	SM652061513	Res Chip 1% 51K Ohm .063W
R31	SM653101589	Res Chip 1% 110 K
R32	SM653101589	Res Chip 1% 110 K
R33	SM653101589	Res Chip 1% 110 K
R34	SM653101589	Res Chip 1% 110 K
R35	SM652061513	Res Chip 1% 51K Ohm .063W
R36	SM652061513	Res Chip 1% 51K Ohm .063W
R37	SM653101589	Res Chip 1% 110 K

Part #: 901586-00 Description: 2 GHz 5GS/s 4 Channel Acquisition Board

Location	Part Number	Description
R38	SM653101393	Res Chip 1% 1.00 K
R39	SM653101393	Res Chip 1% 1.00 K
R40	SM653101589	Res Chip 1% 110 K
R41	SM653101589	Res Chip 1% 110 K
R42	SM653101589	Res Chip 1% 110 K
R43	SM652061513	Res Chip 1% 51K Ohm .063W
R44	SM652061513	Res Chip 1% 51K Ohm .063W
R45	SM653101589	Res Chip 1% 110 K
R46	SM653101422	Res Chip 1% 2.00 K
R47	SM653101422	Res Chip 1% 2.00 K
R48	SM653101422	Res Chip 1% 2.00 K
R49	SM653101422	Res Chip 1% 2.00 K
R50	SM653101422	Res Chip 1% 2.00 K
R51	SM653101422	Res Chip 1% 2.00 K
R52	SM653101393	Res Chip 1% 1.00 K
R53	SM653101458	Res Chip 1 % 4.75 K
R54	SM653101297	Res Chip 1% 100 Ohms
R55	SM653101393	Res Chip 1% 1.00 K
R56	SM653101393	Res Chip 1% 1.00 K
R57	SM653101489	Res Chip 1 % 10.0 K
R58	SM653101518	Res Chip 1% 20.0 K
R59	SM653101393	Res Chip 1% 1.00 K
R60	SM653101393	Res Chip 1% 1.00 K
R61	SM653101393	Res Chip 1% 1.00 K
R62	SM653101518	Res Chip 1% 20.0 K
R63	SM653101489	Res Chip 1 % 10.0 K
R64	SM653101393	Res Chip 1% 1.00 K
R65	SM653101393	Res Chip 1% 1.00 K
R66	SM653101489	Res Chip 1 % 10.0 K
R67	SM652041000	Res Zero ohms
R68	SM653101461	Res Chip 1% 5.11 K
R69	SM653101461	Res Chip 1% 5.11 K
R70	SM653101426	Res Chip 1 % 2.21K
R71	SM653101477	Res Chip 1% 7.50 K
R72	SM653101477	Res Chip 1% 7.50 K
R73	SM653101393	Res Chip 1% 1.00 K
R74	SM653101489	Res Chip 1 % 10.0 K
R75	SM653101489	Res Chip 1 % 10.0 K
R76	SM653101518	Res Chip 1% 20.0 K
R77	SM653101518	Res Chip 1% 20.0 K
R78	SM653101518	Res Chip 1% 20.0 K
R79	SM653101489	Res Chip 1 % 10.0 K
R80	SM653101518	Res Chip 1% 20.0 K
R81	SM653101518	Res Chip 1% 20.0 K

Part #: 901586-00 Description: 2 GHz 5GS/s 4 Channel Acquisition Board

Location	Part Number	Description
R83	SM653101489	Res Chip 1 % 10.0 K
R84	SM653101489	Res Chip 1 % 10.0 K
R85	SM654101000	Chip Jumper Zero Ohms
R86	SM653101489	Res Chip 1 % 10.0 K
R87	SM653101489	Res Chip 1 % 10.0 K
R88	SM653101461	Res Chip 1% 5.11 K
R89	SM653101461	Res Chip 1% 5.11 K
R90	SM653101461	Res Chip 1% 5.11 K
R91	SM652061510	Res Chip 1% 51.0 Ohm .063W
R92	SM652061510	Res Chip 1% 51.0 Ohm .063W
R93	SM653101477	Res Chip 1% 7.50 K
R94	SM653101477	Res Chip 1% 7.50 K
R95	SM653101477	Res Chip 1% 7.50 K
R96	SM653101477	Res Chip 1% 7.50 K
R97	SM653101489	Res Chip 1 % 10.0 K
R98	SM652061102	Res Chip 1% 1.0K Ohm .063W
R99	SM653101422	Res Chip 1% 2.00 K
R100	SM652061361	Res Chip 1% 360 Ohm .063W
R101	SM653101489	Res Chip 1 % 10.0 K
R102	SM652041000	Res Zero ohms
R103	SM653101489	Res Chip 1 % 10.0 K
R104	SM653101354	Res Chip 1% 392 Ohms
R105	SM653101354	Res Chip 1% 392 Ohms
R106	SM653101489	Res Chip 1 % 10.0 K
R107	SM653101489	Res Chip 1 % 10.0 K
R109	SM653101322	Res Chip 1% 182 Ohms
R110	SM653101458	Res Chip 1 % 4.75 K
R111	SM653101458	Res Chip 1 % 4.75 K
R113	SM653101458	Res Chip 1 % 4.75 K
R114	SM653101422	Res Chip 1% 2.00 K
R115	SM653101422	Res Chip 1% 2.00 K
R116	SM654101000	Chip Jumper Zero Ohms
R117	SM654101000	Chip Jumper Zero Ohms
R118	SM652061121	Res Chip 1% 120 Ohm .063W
R119	SM652061121	Res Chip 1% 120 Ohm .063W
R120	SM652061121	Res Chip 1% 120 Ohm .063W
R121	SM652061121	Res Chip 1% 120 Ohm .063W
R122	SM652061121	Res Chip 1% 120 Ohm .063W
R123	SM653101458	Res Chip 1 % 4.75 K
R124	SM652061121	Res Chip 1% 120 Ohm .063W
R125	SM653101458	Res Chip 1 % 4.75 K
R126	SM652061221	Res Chip 1% 220 Ohm .063W
R127	SM652061121	Res Chip 1% 120 Ohm .063W
R128	SM652061121	Res Chip 1% 120 Ohm .063W

Part #: 901586-00 Description: 2 GHz 5GS/s 4 Channel Acquisition Board

Location	Part Number	Description
R129	SM652061221	Res Chip 1% 220 Ohm .063W
R130	SM652061221	Res Chip 1% 220 Ohm .063W
R131	SM652061121	Res Chip 1% 120 Ohm .063W
R132	SM652061121	Res Chip 1% 120 Ohm .063W
R133	SM652061221	Res Chip 1% 220 Ohm .063W
R134	SM652061221	Res Chip 1% 220 Ohm .063W
R135	SM652061121	Res Chip 1% 120 Ohm .063W
R136	SM652061121	Res Chip 1% 120 Ohm .063W
R137	SM652061221	Res Chip 1% 220 Ohm .063W
R138	SM652061221	Res Chip 1% 220 Ohm .063W
R139	SM652061121	Res Chip 1% 120 Ohm .063W
R140	SM652061121	Res Chip 1% 120 Ohm .063W
R141	SM652061221	Res Chip 1% 220 Ohm .063W
R142	SM652061221	Res Chip 1% 220 Ohm .063W
R143	SM652061121	Res Chip 1% 120 Ohm .063W
R144	SM652061121	Res Chip 1% 120 Ohm .063W
R145	SM652061221	Res Chip 1% 220 Ohm .063W
R146	SM652061221	Res Chip 1% 220 Ohm .063W
R147	SM652061121	Res Chip 1% 120 Ohm .063W
R148	SM652061121	Res Chip 1% 120 Ohm .063W
R149	SM652061221	Res Chip 1% 220 Ohm .063W
R150	SM652061221	Res Chip 1% 220 Ohm .063W
R151	SM652061121	Res Chip 1% 120 Ohm .063W
R152	SM652061121	Res Chip 1% 120 Ohm .063W
R153	SM652061221	Res Chip 1% 220 Ohm .063W
R154	SM652061221	Res Chip 1% 220 Ohm .063W
R155	SM652061121	Res Chip 1% 120 Ohm .063W
R156	SM653101354	Res Chip 1% 392 Ohms
R157	SM653101297	Res Chip 1% 100 Ohms
R158	SM653101297	Res Chip 1% 100 Ohms
R159	SM653101297	Res Chip 1% 100 Ohms
R160	SM653101297	Res Chip 1% 100 Ohms
R161	SM653101297	Res Chip 1% 100 Ohms
R162	SM652061121	Res Chip 1% 120 Ohm .063W
R163	SM652061121	Res Chip 1% 120 Ohm .063W
R164	SM652061121	Res Chip 1% 120 Ohm .063W
R165	SM652061121	Res Chip 1% 120 Ohm .063W
R166	SM652061121	Res Chip 1% 120 Ohm .063W
R167	SM652061121	Res Chip 1% 120 Ohm .063W
R168	SM652061121	Res Chip 1% 120 Ohm .063W
R169	SM652061121	Res Chip 1% 120 Ohm .063W
R171	SM652061121	Res Chip 1% 120 Ohm .063W
R172	SM652061121	Res Chip 1% 120 Ohm .063W
R173	SM652061121	Res Chip 1% 120 Ohm .063W

Part #: 901586-00 Description: 2 GHz 5GS/s 4 Channel Acquisition Board

Location	Part Number	Description
R174	SM652061121	Res Chip 1% 120 Ohm .063W
R175	SM652061121	Res Chip 1% 120 Ohm .063W
R176	SM652061121	Res Chip 1% 120 Ohm .063W
R177	SM652061121	Res Chip 1% 120 Ohm .063W
R178	SM652061121	Res Chip 1% 120 Ohm .063W
R179	SM652061121	Res Chip 1% 120 Ohm .063W
R180	SM652061121	Res Chip 1% 120 Ohm .063W
R181	SM652061121	Res Chip 1% 120 Ohm .063W
R182	SM652061121	Res Chip 1% 120 Ohm .063W
R183	SM652061121	Res Chip 1% 120 Ohm .063W
R184	SM652061121	Res Chip 1% 120 Ohm .063W
R185	SM652061102	Res Chip 1% 1.0K Ohm .063W
R186	SM652061222	Res Chip 1% 2.2K Ohm .063W
R187	SM653101354	Res Chip 1% 392 Ohms
R188	SM653101354	Res Chip 1% 392 Ohms
R189	SM653101354	Res Chip 1% 392 Ohms
R190	SM652061334	Res Chip 1% 330K Ohm .063W
R191	SM653101401	Res Chip 1% 1.21 K
R192	SM652061511	Res Chip 1% 510 Ohm .063W
R193	SM653101354	Res Chip 1% 392 Ohms
R194	SM653101277	Res Chip 1% 61.9 Ohms
R195	SM653101422	Res Chip 1% 2.00 K
R196	SM651081102	Res Chip 0.1% 1 Kohm
R198	SM653101422	Res Chip 1% 2.00 K
R200	SM653101489	Res Chip 1 % 10.0 K
R201	SM653101422	Res Chip 1% 2.00 K
R202	SM653101422	Res Chip 1% 2.00 K
R203	SM653101422	Res Chip 1% 2.00 K
R204	SM652061121	Res Chip 1% 120 Ohm .063W
R205	SM652061121	Res Chip 1% 120 Ohm .063W
R206	SM654101000	Chip Jumper Zero Ohms
R207	SM652061510	Res Chip 1% 51.0 Ohm .063W
R208	SM652061510	Res Chip 1% 51.0 Ohm .063W
R209	SM652061510	Res Chip 1% 51.0 Ohm .063W
R210	SM652061510	Res Chip 1% 51.0 Ohm .063W
R211	SM652061511	Res Chip 1% 510 Ohm .063W
R212	SM653101285	Res Chip 1 % 75.0 Ohms
R213	SM652061105	Res Chip 1% 1.0M Ohm .063W
R214	SM653101277	Res Chip 1% 61.9 Ohms
R215	SM653101326	Res Chip 1% 200 Ohms
R216	SM653101326	Res Chip 1% 200 Ohms
R217	SM653101285	Res Chip 1 % 75.0 Ohms
R218	SM653101326	Res Chip 1% 200 Ohms
R219	SM653101326	Res Chip 1% 200 Ohms

Part #: 901586-00 Description: 2 GHz 5GS/s 4 Channel Acquisition Board

Location	Part Number	Description
R220	SM653101334	Res Chip 1% 243 Ohms
R221	SM653101334	Res Chip 1% 243 Ohms
R222	SM653101422	Res Chip 1% 2.00 K
R223	SM653101422	Res Chip 1% 2.00 K
R225	SM653101393	Res Chip 1% 1.00 K
R226	SM653101393	Res Chip 1% 1.00 K
R227	SM653101393	Res Chip 1% 1.00 K
R228	SM653101326	Res Chip 1% 200 Ohms
R229	SM653101326	Res Chip 1% 200 Ohms
R230	SM652061273	Res Chip 1% 27K Ohm .063W
R231	SM653101506	Res Chip 1% 15.0 K
R232	SM653101506	Res Chip 1% 15.0 K
R233	SM653101506	Res Chip 1% 15.0 K
R234	SM652061273	Res Chip 1% 27K Ohm .063W
R235	SM653101377	Res Chip 1% 681 Ohms
R236	SM653101422	Res Chip 1% 2.00 K
R237	SM653101377	Res Chip 1% 681 Ohms
R238	SM653101422	Res Chip 1% 2.00 K
R239	SM653101426	Res Chip 1 % 2.21K
R240	SM652041000	Res Zero ohms
R241	SM653101426	Res Chip 1 % 2.21K
R242	SM653101426	Res Chip 1 % 2.21K
R243	SM653101322	Res Chip 1% 182 Ohms
R244	SM653101322	Res Chip 1% 182 Ohms
R245	SM653101285	Res Chip 1 % 75.0 Ohms
R246	SM653101277	Res Chip 1% 61.9 Ohms
R247	SM653101277	Res Chip 1% 61.9 Ohms
R248	SM653101297	Res Chip 1% 100 Ohms
R249	SM653101226	Res Chip 1% 18.2 Ohms
R250	SM653101347	Res Chip 1% 332 Ohms
R251	SM652061100	Res Chip 1% 10.0 Ohm .063W
R252	SM652061100	Res Chip 1% 10.0 Ohm .063W
R253	SM653101285	Res Chip 1 % 75.0 Ohms
R254	SM653101397	Res Chip 1% 1.10 K
R255	SM653101285	Res Chip 1 % 75.0 Ohms
R256	SM653101377	Res Chip 1% 681 Ohms
R257	SM653101393	Res Chip 1% 1.00 K
R258	SM653101393	Res Chip 1% 1.00 K
R259	SM652061510	Res Chip 1% 51.0 Ohm .063W
R260	SM652061510	Res Chip 1% 51.0 Ohm .063W
R261	SM652061510	Res Chip 1% 51.0 Ohm .063W
R262	SM653101393	Res Chip 1% 1.00 K
R263	SM652061273	Res Chip 1% 27K Ohm .063W
R264	SM653101458	Res Chip 1 % 4.75 K

Part #: 901586-00 Description: 2 GHz 5GS/s 4 Channel Acquisition Board

Location	Part Number	Description
R265	SM653101469	Res Chip 1% 6.19 K
R266	SM653101461	Res Chip 1% 5.11 K
R267	SM653101477	Res Chip 1% 7.50 K
R268	SM653101477	Res Chip 1% 7.50 K
R269	SM652041000	Res Zero ohms
R270	SM652041000	Res Zero ohms
R271	SM652041000	Res Zero ohms
R272	SM653101322	Res Chip 1% 182 Ohms
R273	SM653101322	Res Chip 1% 182 Ohms
R274	SM653101262	Res Chip 1% 43.2 Ohms
R275	SM653101262	Res Chip 1% 43.2 Ohms
R276	SM653101262	Res Chip 1% 43.2 Ohms
R277	SM653101262	Res Chip 1% 43.2 Ohms
R278	SM653101322	Res Chip 1% 182 Ohms
R279	SM653101322	Res Chip 1% 182 Ohms
R280	SM653101430	Res Chip 1% 2.43 K
R281	SM653101477	Res Chip 1% 7.50 K
R282	SM653101477	Res Chip 1% 7.50 K
R283	SM653101430	Res Chip 1% 2.43 K
R284	SM653101393	Res Chip 1% 1.00 K
R285	SM653101277	Res Chip 1% 61.9 Ohms
R286	SM652061273	Res Chip 1% 27K Ohm .063W
R287	SM654101000	Chip Jumper Zero Ohms
R288	SM653101539	Res Chip 1% 33.2 K
R289	SM653101422	Res Chip 1% 2.00 K
R290	SM653101410	Res Chip 1% 1.50 K
R291	SM651081102	Res Chip 0.1% 1 Kohm
R292	SM652061221	Res Chip 1% 220 Ohm .063W
R293	SM653101422	Res Chip 1% 2.00 K
R294	SM651081102	Res Chip 0.1% 1 Kohm
R295	SM653101539	Res Chip 1% 33.2 K
R296	SM654101000	Chip Jumper Zero Ohms
R297	SM652061240	Res Chip 1% 24.0 Ohm .063W
R298	SM652041200	Res 20 Ohms +/-1% 1/16W 0402 S
R299	SM652041000	Res Zero ohms
R300	SM652041000	Res Zero ohms
R301	SM653101262	Res Chip 1% 43.2 Ohms
R302	SM653101262	Res Chip 1% 43.2 Ohms
R303	SM653101322	Res Chip 1% 182 Ohms
R304	SM653101322	Res Chip 1% 182 Ohms
R305	SM653101262	Res Chip 1% 43.2 Ohms
R306	SM653101262	Res Chip 1% 43.2 Ohms
R308	SM653101277	Res Chip 1% 61.9 Ohms
R309	SM653101435	Res Chip 1% 2.74 K

Part #: 901586-00 Description: 2 GHz 5GS/s 4 Channel Acquisition Board

Location	Part Number	Description
R310	SM653101506	Res Chip 1% 15.0 K
R311	SM653101489	Res Chip 1 % 10.0 K
R312	SM653101506	Res Chip 1% 15.0 K
R313	SM652061102	Res Chip 1% 1.0K Ohm .063W
R314	SM652061222	Res Chip 1% 2.2K Ohm .063W
R315	SM653101354	Res Chip 1% 392 Ohms
R316	SM653101354	Res Chip 1% 392 Ohms
R317	SM654101000	Chip Jumper Zero Ohms
R318	SM653101426	Res Chip 1 % 2.21K
R319	SM653101393	Res Chip 1% 1.00 K
R320	SM653101489	Res Chip 1 % 10.0 K
R321	SM652061510	Res Chip 1% 51.0 Ohm .063W
R322	SM652061510	Res Chip 1% 51.0 Ohm .063W
R323	SM652061101	Res Chip 1% 100 Ohm .063W
R324	SM653101430	Res Chip 1% 2.43 K
R325	SM653101354	Res Chip 1% 392 Ohms
R326	SM653101477	Res Chip 1% 7.50 K
R327	SM653101354	Res Chip 1% 392 Ohms
R328	SM653101489	Res Chip 1 % 10.0 K
R329	SM653101489	Res Chip 1 % 10.0 K
R330	SM653101297	Res Chip 1% 100 Ohms
R331	SM653101297	Res Chip 1% 100 Ohms
R332	SM652041011	Res Chip 1% 49.9 Ohms
R333	SM652041011	Res Chip 1% 49.9 Ohms
R334	SM652041011	Res Chip 1% 49.9 Ohms
R335	SM652041011	Res Chip 1% 49.9 Ohms
R336	SM653101422	Res Chip 1% 2.00 K
R337	SM653101422	Res Chip 1% 2.00 K
R338	SM653101354	Res Chip 1% 392 Ohms
R339	SM653101354	Res Chip 1% 392 Ohms
R340	SM652041011	Res Chip 1% 49.9 Ohms
R341	SM652061431	Res Chip 1% 430 Ohm .063W
R342	SM653101489	Res Chip 1 % 10.0 K
R343	SM653101297	Res Chip 1% 100 Ohms
R344	SM653101422	Res Chip 1% 2.00 K
R345	SM653101377	Res Chip 1% 681 Ohms
R346	SM653101422	Res Chip 1% 2.00 K
R347	SM654101000	Chip Jumper Zero Ohms
R348	SM652041011	Res Chip 1% 49.9 Ohms
R349	SM652041011	Res Chip 1% 49.9 Ohms
R350	SM653101393	Res Chip 1% 1.00 K
R351	SM653101426	Res Chip 1 % 2.21K
R352	SM653101426	Res Chip 1 % 2.21K
R353	SM653041297	RES CHIP 1% 100 OHMS 0402

Part #: 901586-00 Description: 2 GHz 5GS/s 4 Channel Acquisition Board

Location	Part Number	Description
R354	SM653101422	Res Chip 1% 2.00 K
R355	SM653101422	Res Chip 1% 2.00 K
R356	SM653101426	Res Chip 1 % 2.21K
R357	SM653101426	Res Chip 1 % 2.21K
R358	SM652061510	Res Chip 1% 51.0 Ohm .063W
R359	SM652061101	Res Chip 1% 100 Ohm .063W
R360	SM653101277	Res Chip 1% 61.9 Ohms
R361	SM653101539	Res Chip 1% 33.2 K
R362	SM653101539	Res Chip 1% 33.2 K
R363	SM653101422	Res Chip 1% 2.00 K
R364	SM653101422	Res Chip 1% 2.00 K
R365	SM653101461	Res Chip 1% 5.11 K
R366	SM653101393	Res Chip 1% 1.00 K
R367	SM653101410	Res Chip 1% 1.50 K
R368	SM653101489	Res Chip 1 % 10.0 K
R369	SM652101101	Res Chip (E24) 1% 100 Ohm
R370	SM653101297	Res Chip 1% 100 Ohms
R373	SM653101297	Res Chip 1% 100 Ohms
R374	SM653101393	Res Chip 1% 1.00 K
R375	SM653101393	Res Chip 1% 1.00 K
R377	SM653101393	Res Chip 1% 1.00 K
R378	SM653101393	Res Chip 1% 1.00 K
R380	SM652041011	Res Chip 1% 49.9 Ohms
R381	SM652041011	Res Chip 1% 49.9 Ohms
R382	SM653041297	RES CHIP 1% 100 OHMS 0402
R383	SM653041297	RES CHIP 1% 100 OHMS 0402
R384	SM653041297	RES CHIP 1% 100 OHMS 0402
R385	SM653041297	RES CHIP 1% 100 OHMS 0402
R386	SM652061102	Res Chip 1% 1.0K Ohm .063W
R387	SM652061102	Res Chip 1% 1.0K Ohm .063W
R388	SM652101101	Res Chip (E24) 1% 100 Ohm
R389	SM654101000	Chip Jumper Zero Ohms
R392	SM653101297	Res Chip 1% 100 Ohms
R393	SM653101297	Res Chip 1% 100 Ohms
R394	SM653101297	Res Chip 1% 100 Ohms
R395	SM653101422	Res Chip 1% 2.00 K
R396	SM661255015	Cap Cera Chip 1.5 PF
R397	SM653101422	Res Chip 1% 2.00 K
R398	SM653101377	Res Chip 1% 681 Ohms
R399	SM654101000	Chip Jumper Zero Ohms
R400	SM653101401	Res Chip 1% 1.21 K
R401	SM653101401	Res Chip 1% 1.21 K
R402	SM652061102	Res Chip 1% 1.0K Ohm .063W
R403	SM652061102	Res Chip 1% 1.0K Ohm .063W

Part #: 901586-00 Description: 2 GHz 5GS/s 4 Channel Acquisition Board

Location	Part Number	Description
R404	SM652061102	Res Chip 1% 1.0K Ohm .063W
R405	SM652061102	Res Chip 1% 1.0K Ohm .063W
R406	SM652061102	Res Chip 1% 1.0K Ohm .063W
R407	SM652061102	Res Chip 1% 1.0K Ohm .063W
R408	SM652061102	Res Chip 1% 1.0K Ohm .063W
R409	SM654101000	Chip Jumper Zero Ohms
R410	SM654101000	Chip Jumper Zero Ohms
R411	SM654101000	Chip Jumper Zero Ohms
R412	SM654101000	Chip Jumper Zero Ohms
R413	SM654101000	Chip Jumper Zero Ohms
R414	SM654101000	Chip Jumper Zero Ohms
R415	SM654101000	Chip Jumper Zero Ohms
R416	SM654101000	Chip Jumper Zero Ohms
R417	SM654101000	Chip Jumper Zero Ohms
R418	SM654101000	Chip Jumper Zero Ohms
R419	SM653101401	Res Chip 1% 1.21 K
R420	SM652061100	Res Chip 1% 10.0 Ohm .063W
R421	SM653101322	Res Chip 1% 182 Ohms
R422	SM652061100	Res Chip 1% 10.0 Ohm .063W
R423	SM653101322	Res Chip 1% 182 Ohms
R424	SM653101322	Res Chip 1% 182 Ohms
R425	SM652061201	Res Chip 1% 200 Ohm .063W
R426	SM652061271	Res Chip 1% 270 Ohm .063W
R427	SM433695250	PTC Resettable Device 2.5A
R439	SM651081102	Res Chip 0.1% 1 Kohm
R440	SM651081102	Res Chip 0.1% 1 Kohm
R441	SM651081102	Res Chip 0.1% 1 Kohm
R442	SM651081102	Res Chip 0.1% 1 Kohm
R443	SM651081102	Res Chip 0.1% 1 Kohm
R444	SM652061101	Res Chip 1% 100 Ohm .063W
R445	SM651081102	Res Chip 0.1% 1 Kohm
R446	SM652061101	Res Chip 1% 100 Ohm .063W
R447	SM653101422	Res Chip 1% 2.00 K
R448	SM653101377	Res Chip 1% 681 Ohms
R449	SM653101539	Res Chip 1% 33.2 K
R450	SM653101422	Res Chip 1% 2.00 K
R451	SM653101422	Res Chip 1% 2.00 K
R452	SM653101458	Res Chip 1 % 4.75 K
R453	SM653101477	Res Chip 1% 7.50 K
R454	SM654101000	Chip Jumper Zero Ohms
R455	SM653101422	Res Chip 1% 2.00 K
R456	SM653101377	Res Chip 1% 681 Ohms
R457	SM653101539	Res Chip 1% 33.2 K
R458	SM653101422	Res Chip 1% 2.00 K

Part #: 901586-00 Description: 2 GHz 5GS/s 4 Channel Acquisition Board

Location	Part Number	Description
R459	SM653101422	Res Chip 1% 2.00 K
R460	SM654101000	Chip Jumper Zero Ohms
R461	SM653101477	Res Chip 1% 7.50 K
R462	SM653101458	Res Chip 1 % 4.75 K
R463	SM652061361	Res Chip 1% 360 Ohm .063W
R464	SM653101322	Res Chip 1% 182 Ohms
R465	SM653101322	Res Chip 1% 182 Ohms
R466	SM652061361	Res Chip 1% 360 Ohm .063W
R467	SM653101322	Res Chip 1% 182 Ohms
R468	SM653101435	Res Chip 1% 2.74 K
R469	SM653101322	Res Chip 1% 182 Ohms
R470	SM652061103	Res Chip 1% 10K Ohm .063W
R471	SM652061103	Res Chip 1% 10K Ohm .063W
R472	SM652061103	Res Chip 1% 10K Ohm .063W
R473	SM653101393	Res Chip 1% 1.00 K
R474	SM652041000	Res Zero ohms
R475	SM652061102	Res Chip 1% 1.0K Ohm .063W
R476	SM652061102	Res Chip 1% 1.0K Ohm .063W
R477	SM653101458	Res Chip 1 % 4.75 K
R478	SM652041000	Res Zero ohms
R479	SM652041000	Res Zero ohms
R480	SM651081102	Res Chip 0.1% 1 Kohm
R481	SM653101297	Res Chip 1% 100 Ohms
R482	SM653101393	Res Chip 1% 1.00 K
R483	SM653101489	Res Chip 1 % 10.0 K
R484	SM653101489	Res Chip 1 % 10.0 K
R485	SM652061102	Res Chip 1% 1.0K Ohm .063W
R486	SM652061102	Res Chip 1% 1.0K Ohm .063W
R487	SM652061102	Res Chip 1% 1.0K Ohm .063W
R488	SM652061102	Res Chip 1% 1.0K Ohm .063W
R489	SM652061102	Res Chip 1% 1.0K Ohm .063W
R490	SM652061102	Res Chip 1% 1.0K Ohm .063W
R492	SM652041000	Res Zero ohms
R493	SM652041000	Res Zero ohms
R494	SM652041000	Res Zero ohms
R495	SM652041000	Res Zero ohms
R496	SM652041000	Res Zero ohms
R498	SM652041000	Res Zero ohms
R499	SM652041000	Res Zero ohms
R500	SM652041000	Res Zero ohms
R501	SM652041000	Res Zero ohms
R502	SM652041000	Res Zero ohms
R503	SM652041000	Res Zero ohms
R504	SM652041000	Res Zero ohms

Part #: 901586-00 Description: 2 GHz 5GS/s 4 Channel Acquisition Board

Location	Part Number	Description
R505	SM652041000	Res Zero ohms
R506	SM652041000	Res Zero ohms
R509	SM652041000	Res Zero ohms
R510	SM652041000	Res Zero ohms
R511	SM652041000	Res Zero ohms
R513	SM652041000	Res Zero ohms
R514	SM652041000	Res Zero ohms
R517	SM652041000	Res Zero ohms
R518	SM652041000	Res Zero ohms
R521	SM652041000	Res Zero ohms
R522	SM652041000	Res Zero ohms
R525	SM652041000	Res Zero ohms
R526	SM652041000	Res Zero ohms
R528	SM652041000	Res Zero ohms
R529	SM652041000	Res Zero ohms
R530	SM652041000	Res Zero ohms
R532	SM652041000	Res Zero ohms
R533	SM652041000	Res Zero ohms
R534	SM652041000	Res Zero ohms
R535	SM652041000	Res Zero ohms
R536	SM652041000	Res Zero ohms
R537	SM652041000	Res Zero ohms
R538	SM652041000	Res Zero ohms
R539	SM652041000	Res Zero ohms
R540	SM652041000	Res Zero ohms
R541	SM652041000	Res Zero ohms
R545	SM652061102	Res Chip 1% 1.0K Ohm .063W
R546	SM652061102	Res Chip 1% 1.0K Ohm .063W
R549	SM653101422	Res Chip 1% 2.00 K
R550	SM653101422	Res Chip 1% 2.00 K
R551	SM653101422	Res Chip 1% 2.00 K
R552	SM652041000	Res Zero ohms
R553	SM652041000	Res Zero ohms
R554	SM652041000	Res Zero ohms
R555	SM652041000	Res Zero ohms
R556	SM652041000	Res Zero ohms
R557	SM652041000	Res Zero ohms
R560	SM652041000	Res Zero ohms
S1	416162005	Switch R/A PCB Mtg SPDT MOM
U1	SM207944351	OCTAL ANALOG MUX/DEMUX 74HCT43
U2	SM207944351	OCTAL ANALOG MUX/DEMUX 74HCT43
U3	SM205625616	IC 256K X 16 CMOS SRAM
U4	SM207944351	OCTAL ANALOG MUX/DEMUX 74HCT43
U7	SM205129160	IC FLASH MEM 16 MBIT HY29LV160

Part #: 901586-00 Description: 2 GHz 5GS/s 4 Channel Acquisition Board

Location	Part Number	Description
U10	SM208472022	Opamp, Dual, Low Pwr TLE2022C
U11	SM270330848	Transistor Npn BC848C
U12	SM208550821	Voltage Monitor MAX821
U13	SM207010002	IC CMOS 8 BIT LOW RES BUS SWIT
U14	SM208701023	IC Temperature Sensor
U16	SM227110161	16 BIT MICROCONTROLLER C161PI
U17	SM207944351	OCTAL ANALOG MUX/DEMUX 74HCT43
U19	SM206178125	IC Quad Bfr Line Dryr 3 State
U20	SM207944351	OCTAL ANALOG MUX/DEMUX 74HCT43
U21	SM205715003	IC PAL FG456 Fine-Pitch BGA
U22	SM208909850	DDS-125MHZ Cmos Synth AD9850
U23	SM201570016	IC Ecl Diff Receiver 10EL16D
U24	SM208470353	IC Dual OP Amp LF353
U25	SM281115003	P-CH Hdtmos Pwr E-Fet MTB50P03
U26	SM281115003	P-CH Hdtmos Pwr E-Fet MTB50P03
U27	SM201274033	IC Ecl Divide BY 4 MC10EL33
U28	SM205200002	IC 8M x 8 Bit 133MHz SDRAM
U29	SM207010002	IC CMOS 8 BIT LOW RES BUS SWIT
U30	SM208470353	IC Dual OP Amp LF353
U31	SM202102001	IC ECL /PECL 1:5 DIFF CLK DRVR
U32	SM201774025	Diff Ecl-Ttl Transl 10ELT25
U33	SM201774025	Diff Ecl-Ttl Transl 10ELT25
U34	SM207010011	IC Quad 10-Bit DAC LTC1664
U35	SM207131660	IC Dac Octal 10BIT Serial Unip
U36	SM208470353	IC Dual OP Amp LF353
U37	SM208476482	IC Dual OP Amp Rail TO Rail 64
U38	SM205715003	IC PAL FG456 Fine-Pitch BGA
U39	SM201774025	Diff Ecl-Ttl Transl 10ELT25
U40	SM208470353	IC Dual OP Amp LF353
U41	SM208470353	IC Dual OP Amp LF353
U42	SM206370024	IC Ttl TO Diff Ecl Transl MC10
U43	MAM439	Monolithic 8 Megabyte Dram Mem
U44	SM207010002	IC CMOS 8 BIT LOW RES BUS SWIT
U45	MAM439	Monolithic 8 Megabyte Dram Mem
U46	SM202107002	100EP57 4:1 MUX
U47	SM202059003	ECL Diff Rec/Driv w/Enable Out
U48	SM280217505	Mosfet, Nchanel, 75A, 50V, D2P
U49	MAM439	Monolithic 8 Megabyte Dram Mem
U50	HAD639C-02	Packaged MAD440E 10GS/s SiGe
U51	MAM439	Monolithic 8 Megabyte Dram Mem
U52	HTB645	Hybrid Pkgd Timebase Trigger
U53	MST429A	IC Smart Trigger Gate-Array
U54	SM201570016	IC Ecl Diff Receiver 10EL16D
U55	SM206370024	IC Ttl TO Diff Ecl Transl MC10

Part #: 901586-00 Description: 2 GHz 5GS/s 4 Channel Acquisition Board

Location	Part Number	Description
U56	MAM439	Monolithic 8 Megabyte Dram Mem
U57	HAD639C-02	Packaged MAD440E 10GS/s SiGe
U58	MAM439	Monolithic 8 Megabyte Dram Mem
U59	SM208470353	IC Dual OP Amp LF353
U60	SM207010014	16 Bit Buffer/Driver 3-State
U61	SM281115003	P-CH Hdtmos Pwr E-Fet MTB50P03
U62	SM206370024	IC Ttl TO Diff Ecl Transl MC10
U63	SM208470353	IC Dual OP Amp LF353
U64	SM281115003	P-CH Hdtmos Pwr E-Fet MTB50P03
U65	SM208556138	IC Volt Ref 4.096V 0.1% 25ppm
U66	SM208470353	IC Dual OP Amp LF353
U67	SM208472022	Opamp, Dual, Low Pwr TLE2022C
U68	SM202057002	IC Triple 2-CH Analog Mux
U69	SM200180032	IC 2-in OR Gate 74VHC1G32
U70	SM208476482	IC Dual OP Amp Rail TO Rail 64
U76	SM311000005	Crystal Oscillator 16 MHz 3.3V

This page intentionally left blank

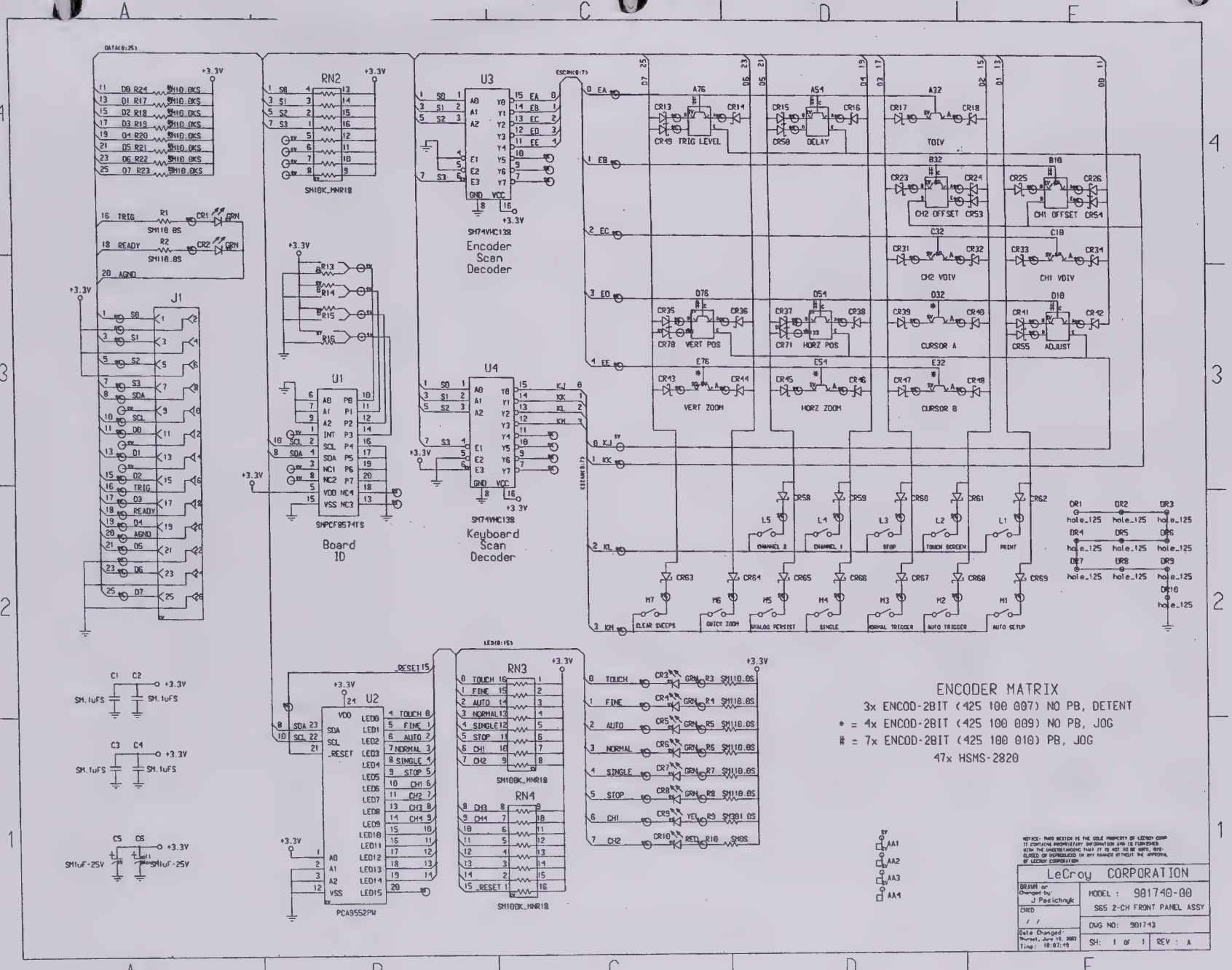
U3
Encoder Scan Decoder
SM74VHC138
U4
Keyboard Scan Decoder
SM74VHC138
U1
Board ID
SMPCF8574TS
U2
PCA9552PW
RN2
SM10K_MNR18
RN3
SM10K_MNR18
RN4
SM10K_MNR18
J1
ENCODER MATRIX
3x ENCOD-2BIT (425 100 007) NO PB, DETENT
* = 4x ENCOD-2BIT (425 100 009) NO PB, JOG
# = 7x ENCOD-2BIT (425 100 010) PB, JOG
47x HSMS-2820
LeCroy CORPORATION
MODEL : 901740-00
SDS 2-CH FRONT PANEL ASSY
DWG NO: 901743
SH: 1 OF 1
REV : A

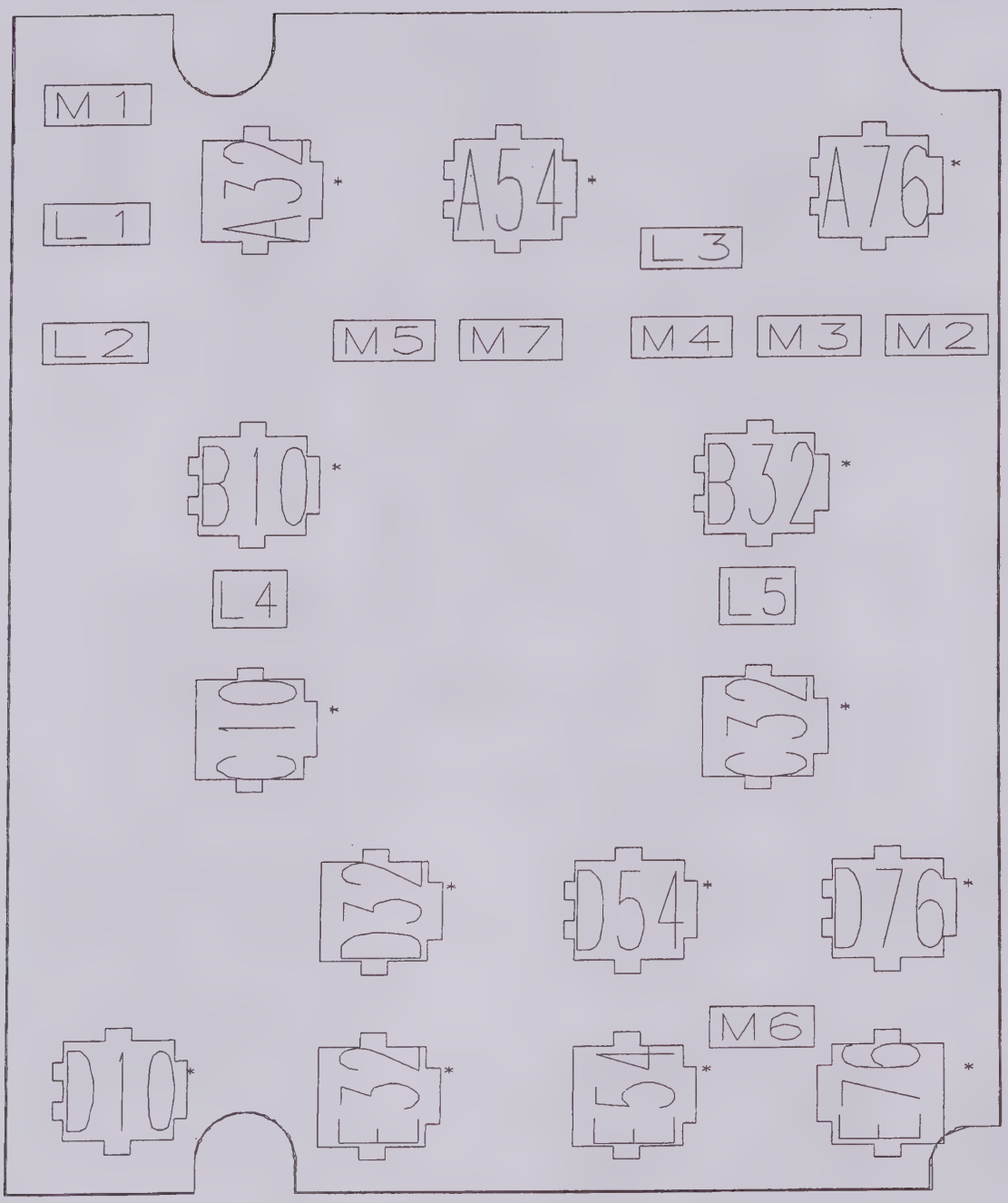

2 channel Encoder Board – Top Side

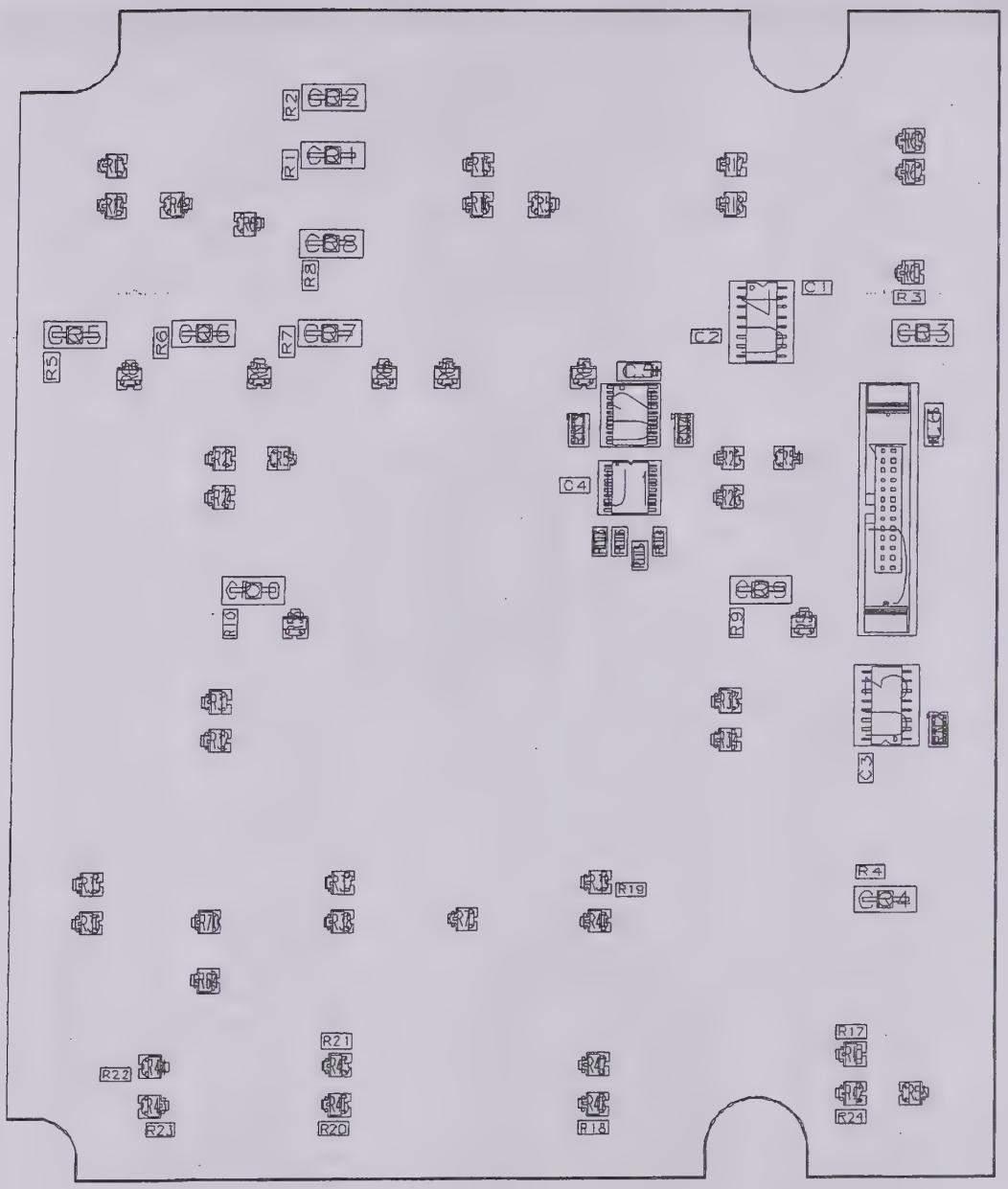

2 channel Encoder Board – Bottom Side

Part #: 901740-00 Description: 2 Channel Front Panel Encoder Board

Location	Part Number	Description
A32	425100007	Encoder 20mm Detent
A54	425100010	Encoder 20mm Detent JOG PB
A76	425100010	Encoder 20mm Detent JOG PB
B10	425100010	Encoder 20mm Detent JOG PB
B32	425100010	Encoder 20mm Detent JOG PB
C1	SM661207104	Cap Cera Chip 20 % .1 UF
C2	SM661207104	Cap Cera Chip 20 % .1 UF
C3	SM661207104	Cap Cera Chip 20 % .1 UF
C4	SM661207104	Cap Cera Chip 20 % .1 UF
C5	SM666487105	Cap Mold EIA Chip 1uF 10%
C6	SM666487105	Cap Mold EIA Chip 1uF 10%
C10	425100007	Encoder 20mm Detent
C32	425100007	Encoder 20mm Detent
CR1	SM256000005	DIODE LED AQUA GREEN 2MM
CR2	SM256000005	DIODE LED AQUA GREEN 2MM
CR3	SM256000005	DIODE LED AQUA GREEN 2MM
CR4	SM256000005	DIODE LED AQUA GREEN 2MM
CR5	SM256000005	DIODE LED AQUA GREEN 2MM
CR6	SM256000005	DIODE LED AQUA GREEN 2MM
CR7	SM256000005	DIODE LED AQUA GREEN 2MM
CR8	SM256000005	DIODE LED AQUA GREEN 2MM
CR9	SM256000006	DIODE LED SP YELLOW 2MM
CR10	SM256000001	DIODE LED RED 2MM
CR13	SM253032820	Diode Schottky 2820
CR14	SM253032820	Diode Schottky 2820
CR15	SM253032820	Diode Schottky 2820
CR16	SM253032820	Diode Schottky 2820
CR17	SM253032820	Diode Schottky 2820
CR18	SM253032820	Diode Schottky 2820
CR23	SM253032820	Diode Schottky 2820
CR24	SM253032820	Diode Schottky 2820
CR25	SM253032820	Diode Schottky 2820
CR26	SM253032820	Diode Schottky 2820
CR31	SM253032820	Diode Schottky 2820
CR32	SM253032820	Diode Schottky 2820
CR33	SM253032820	Diode Schottky 2820
CR34	SM253032820	Diode Schottky 2820
CR35	SM253032820	Diode Schottky 2820
CR36	SM253032820	Diode Schottky 2820
CR37	SM253032820	Diode Schottky 2820
CR38	SM253032820	Diode Schottky 2820
CR39	SM253032820	Diode Schottky 2820
CR40	SM253032820	Diode Schottky 2820
CR41	SM253032820	Diode Schottky 2820

Part #: 901740-00 Description: 2 Channel Front Panel Encoder Board

Location	Part Number	Description
CR42	SM253032820	Diode Schottky 2820
CR43	SM253032820	Diode Schottky 2820
CR44	SM253032820	Diode Schottky 2820
CR45	SM253032820	Diode Schottky 2820
CR46	SM253032820	Diode Schottky 2820
CR47	SM253032820	Diode Schottky 2820
CR48	SM253032820	Diode Schottky 2820
CR49	SM253032820	Diode Schottky 2820
CR50	SM253032820	Diode Schottky 2820
CR53	SM253032820	Diode Schottky 2820
CR54	SM253032820	Diode Schottky 2820
CR55	SM253032820	Diode Schottky 2820
CR58	SM253032820	Diode Schottky 2820
CR59	SM253032820	Diode Schottky 2820
CR60	SM253032820	Diode Schottky 2820
CR61	SM253032820	Diode Schottky 2820
CR62	SM253032820	Diode Schottky 2820
CR63	SM253032820	Diode Schottky 2820
CR64	SM253032820	Diode Schottky 2820
CR65	SM253032820	Diode Schottky 2820
CR66	SM253032820	Diode Schottky 2820
CR67	SM253032820	Diode Schottky 2820
CR68	SM253032820	Diode Schottky 2820
CR69	SM253032820	Diode Schottky 2820
CR70	SM253032820	Diode Schottky 2820
CR71	SM253032820	Diode Schottky 2820
D10	425100010	Encoder 20mm Detent JOG PB
D32	425100009	Encoder 20mm Detent JOG
D54	425100010	Encoder 20mm Detent JOG PB
D76	425100010	Encoder 20mm Detent JOG PB
E32	425100009	Encoder 20mm Detent JOG
E54	425100009	Encoder 20mm Detent JOG
E76	425100009	Encoder 20mm Detent JOG
J1	SM453026002	Conn .050" Hdr 26-Pos Male
R1	SM653101301	Res Chip 1% 110 Ohms
R2	SM653101301	Res Chip 1% 110 Ohms
R3	SM653101301	Res Chip 1% 110 Ohms
R4	SM653101301	Res Chip 1% 110 Ohms
R5	SM653101301	Res Chip 1% 110 Ohms
R6	SM653101301	Res Chip 1% 110 Ohms
R7	SM653101301	Res Chip 1% 110 Ohms
R8	SM653101301	Res Chip 1% 110 Ohms
R9	SM653101343	Res Chip 1% 301 Ohms
R10	SM654101000	Chip Jumper Zero Ohms

Part #: 901740-00 Description: 2 Channel Front Panel Encoder Board

Location	Part Number	Description
R13	SM654101000	Chip Jumper Zero Ohms
R14	SM654101000	Chip Jumper Zero Ohms
R15	SM654101000	Chip Jumper Zero Ohms
R16	SM654101000	Chip Jumper Zero Ohms
R17	SM653101489	Res Chip 1 % 10.0 K
R18	SM653101489	Res Chip 1 % 10.0 K
R19	SM653101489	Res Chip 1 % 10.0 K
R20	SM653101489	Res Chip 1 % 10.0 K
R21	SM653101489	Res Chip 1 % 10.0 K
R22	SM653101489	Res Chip 1 % 10.0 K
R23	SM653101489	Res Chip 1 % 10.0 K
R24	SM653101489	Res Chip 1 % 10.0 K
RN2	SM190105001	Resistor Network 10K Ohm 5%
RN3	SM190105003	Resistor Network 100K Ohm 5%
RN4	SM190105003	Resistor Network 100K Ohm 5%
U1	SM207630574	IC 8-Bit I/O Expander I2C Bus
U2	SM202109001	IC 16-Bit IIC LED Driver PCA95
U3	SM202051011	IC 3-to-8 Line Decoder VHC138
U4	SM202051011	IC 3-to-8 Line Decoder VHC138

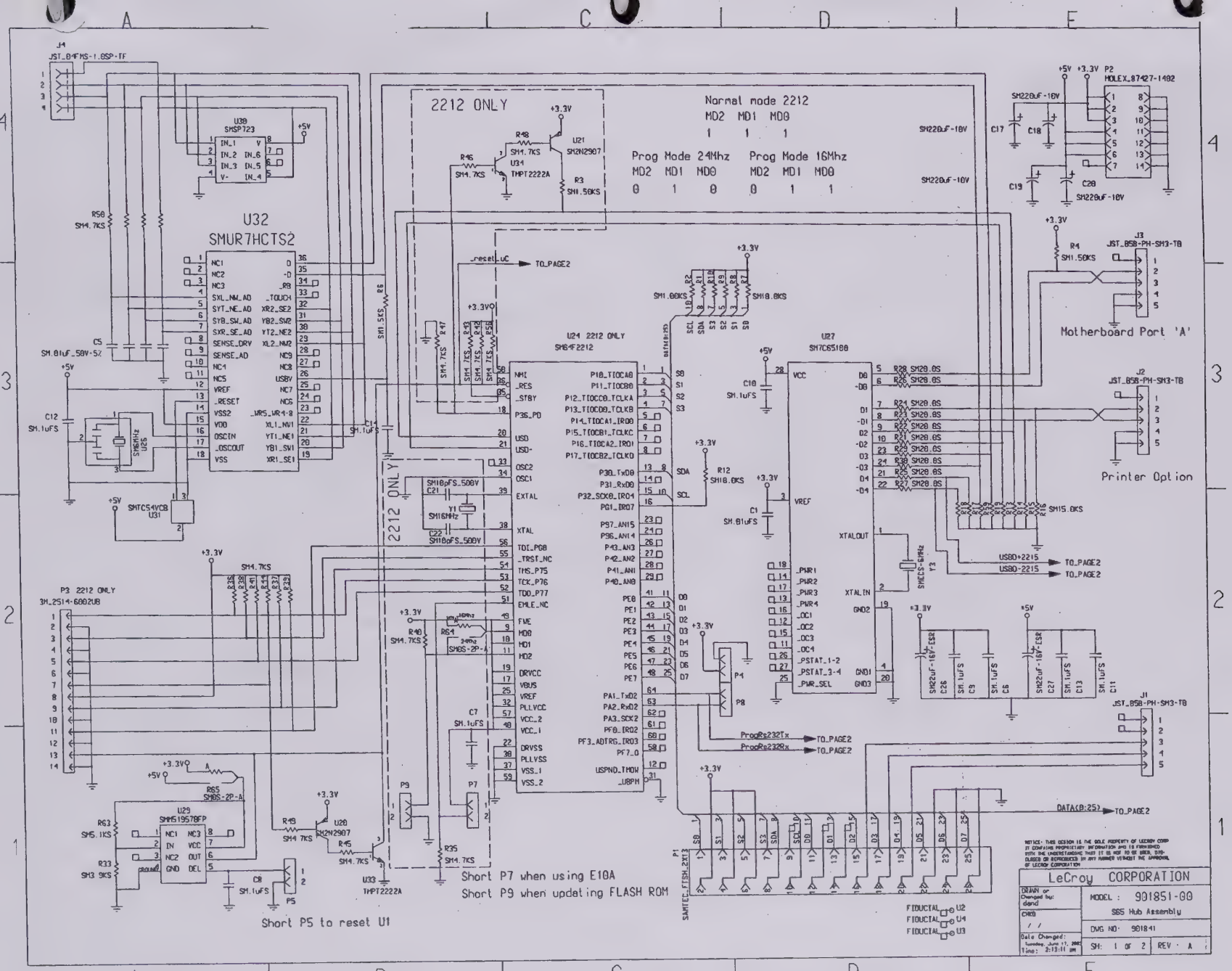
2212 ONLY
Normal mode 2212
MD2 MD1 MD0
1 1 1
Prog Mode 24Mhz
MD2 MD1 MD0
0 1 0
Prog Mode 16Mhz
MD2 MD1 MD0
0 1 1
U32
SMUR7HCTS2
U24 2212 ONLY
SH64F2212
U27
SM7C65188
Motherboard Port 'A'
Printer Option
Short P7 when using E10A
Short P9 when updating FLASH ROM
Short P5 to reset U1
LeCroy CORPORATION
MODEL : 901851-00
SBS Hub Assembly
DWG NO: 901841
SH: 1 OF 2
REV: A

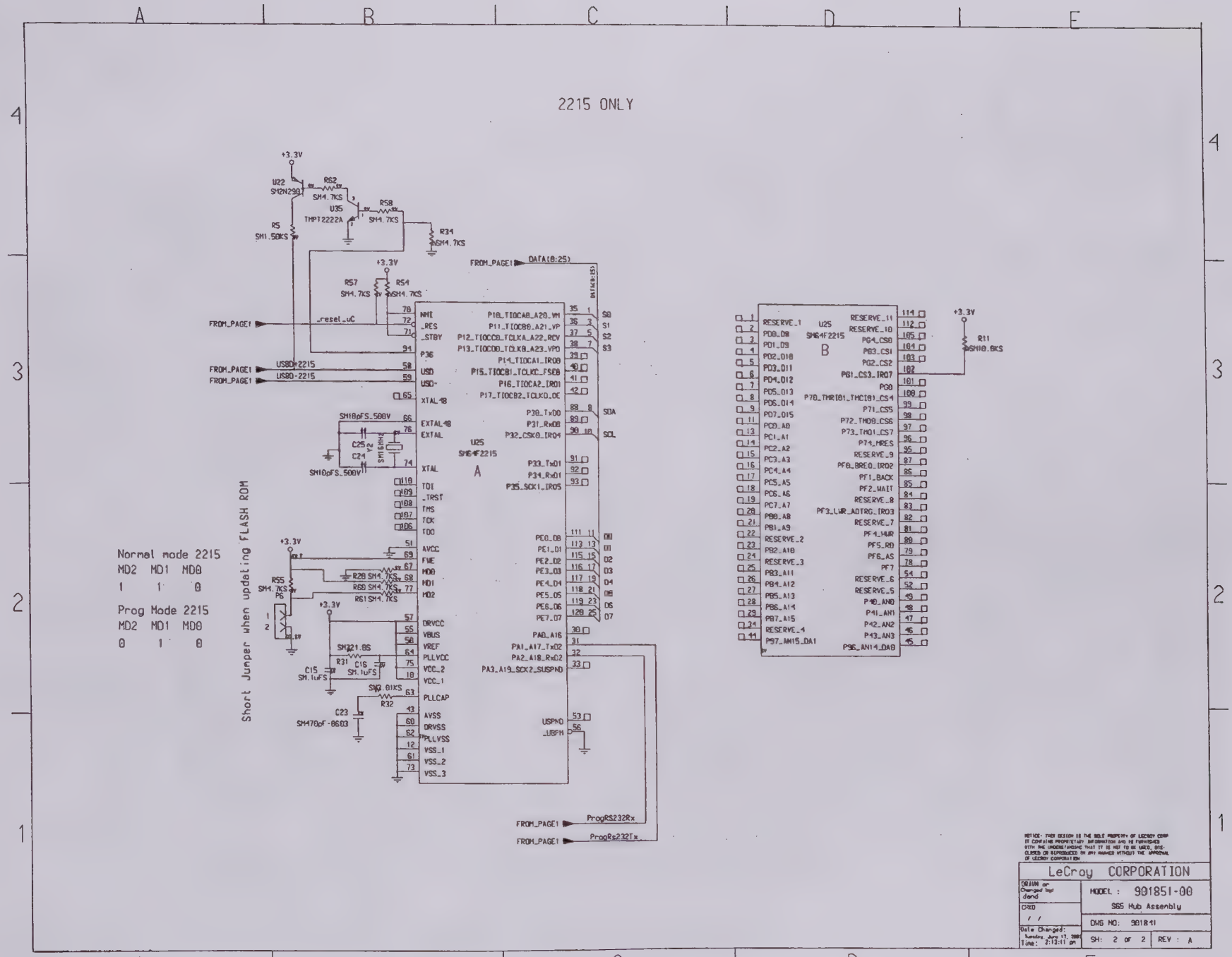
2215 ONLY
Short Jumper when updating FLASH ROM
Normal mode 2215
MD2 MD1 MD0
1 1 0
Prog Mode 2215
MD2 MD1 MD0
0 1 0
U25
SM64F2215
A
B
FROM_PAGE1
DATA(8:25)
_reset_uC
USB0+2215
USB0-2215
ProgRS232Rx
ProgRs232Tx
LeCroy CORPORATION
MODEL : 901851-00
SGS Hub Assembly
DWG NO: 901811
SH: 2 OF 2
REV : A

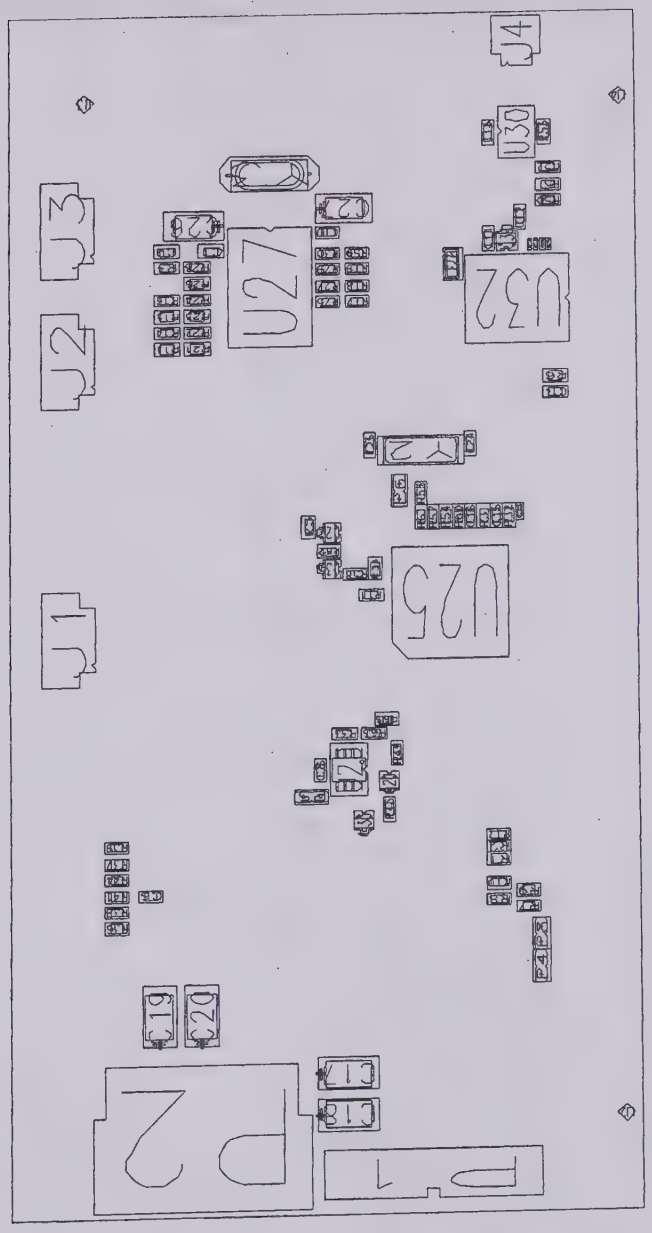

USB Hub

Part #: 901851-00 Description: USB Hub Interface Board

Location	Part Number	Description
C1	SM661207103	Cap Cera Chip 20% .01 UF
C2	SM662131003	Cap Cera Chip 5% 50V .01 UF
C3	SM662131003	Cap Cera Chip 5% 50V .01 UF
C4	SM662131003	Cap Cera Chip 5% 50V .01 UF
C5	SM662131003	Cap Cera Chip 5% 50V .01 UF
C6	SM661207104	Cap Cera Chip 20 % .1 UF
C8	SM661207104	Cap Cera Chip 20 % .1 UF
C9	SM661207104	Cap Cera Chip 20 % .1 UF
C10	SM661207104	Cap Cera Chip 20 % .1 UF
C11	SM661207104	Cap Cera Chip 20 % .1 UF
C12	SM661207104	Cap Cera Chip 20 % .1 UF
C13	SM661207104	Cap Cera Chip 20 % .1 UF
C14	SM661207104	Cap Cera Chip 20 % .1 UF
C15	SM661207104	Cap Cera Chip 20 % .1 UF
C16	SM661207104	Cap Cera Chip 20 % .1 UF
C17	SM666267227	Cap Tant 220UF 10V 20%
C18	SM666267227	Cap Tant 220UF 10V 20%
C19	SM666267227	Cap Tant 220UF 10V 20%
C20	SM666267227	Cap Tant 220UF 10V 20%
C23	SM661073471	Cap Cera 470PF+/- 5% 50V Npo
C24	SM661540100	Cap Cera 10PF/500V Npo
C25	SM661540100	Cap Cera 10PF/500V Npo
C26	SM668016226	Cap tant 22UF/16V 20 % L Esr
C27	SM668016226	Cap tant 22UF/16V 20 % L Esr
J1	SM453005001	Header 1 x 5 Shrouded
J2	SM453005001	Header 1 x 5 Shrouded
J3	SM453005001	Header 1 x 5 Shrouded
J4	SM453004002	Conn 4 Pos 1mm FFC FMS Series
P1	SM453026002	Conn .050" Hdr 26-Pos Male
P2	454014002	Conn Hdr R/A 14-Pos Wire-BD
P4	454340002	Hdr Sold Tail/WW 2
P5	454340002	Hdr Sold Tail/WW 2
P6	454340002	Hdr Sold Tail/WW 2
P8	454340002	Hdr Sold Tail/WW 2
R1	SM653101393	Res Chip 1% 1.00 K
R2	SM653101393	Res Chip 1% 1.00 K
R4	SM653101410	Res Chip 1% 1.50 K
R5	SM653101410	Res Chip 1% 1.50 K
R6	SM652101152	Res Chip E24 1% 1.5 K
R7	SM653101489	Res Chip 1 % 10.0 K
R8	SM653101489	Res Chip 1 % 10.0 K
R9	SM653101489	Res Chip 1 % 10.0 K
R10	SM653101489	Res Chip 1 % 10.0 K
R11	SM653101489	Res Chip 1 % 10.0 K

Part #: 901851-00 Description: USB Hub Interface Board

Location	Part Number	Description
R12	SM653101489	Res Chip 1 % 10.0 K
R13	SM653101506	Res Chip 1% 15.0 K
R14	SM653101506	Res Chip 1% 15.0 K
R15	SM653101506	Res Chip 1% 15.0 K
R16	SM653101506	Res Chip 1% 15.0 K
R17	SM653101506	Res Chip 1% 15.0 K
R18	SM653101506	Res Chip 1% 15.0 K
R19	SM653101506	Res Chip 1% 15.0 K
R20	SM652101472	Res Chip (E24) 1% 4.7 K
R21	SM653101230	Res Chip 1% 20.0 Ohms
R22	SM653101230	Res Chip 1% 20.0 Ohms
R23	SM653101230	Res Chip 1% 20.0 Ohms
R24	SM653101230	Res Chip 1% 20.0 Ohms
R25	SM653101230	Res Chip 1% 20.0 Ohms
R26	SM653101230	Res Chip 1% 20.0 Ohms
R27	SM653101230	Res Chip 1% 20.0 Ohms
R28	SM653101230	Res Chip 1% 20.0 Ohms
R29	SM653101230	Res Chip 1% 20.0 Ohms
R30	SM653101230	Res Chip 1% 20.0 Ohms
R31	SM653101330	Res Chip 1% 221 Ohms
R32	SM653101439	Res Chip 1% 3.01 K
R33	SM652101392	Res Chip (E24) 1% 3.9 K
R34	SM652101472	Res Chip (E24) 1% 4.7 K
R36	SM652101472	Res Chip (E24) 1% 4.7 K
R37	SM652101472	Res Chip (E24) 1% 4.7 K
R38	SM652101472	Res Chip (E24) 1% 4.7 K
R39	SM652101472	Res Chip (E24) 1% 4.7 K
R41	SM652101472	Res Chip (E24) 1% 4.7 K
R44	SM652101472	Res Chip (E24) 1% 4.7 K
R45	SM652101472	Res Chip (E24) 1% 4.7 K
R49	SM652101472	Res Chip (E24) 1% 4.7 K
R50	SM652101472	Res Chip (E24) 1% 4.7 K
R51	SM652101472	Res Chip (E24) 1% 4.7 K
R52	SM652101472	Res Chip (E24) 1% 4.7 K
R53	SM652101472	Res Chip (E24) 1% 4.7 K
R54	SM652101472	Res Chip (E24) 1% 4.7 K
R55	SM652101472	Res Chip (E24) 1% 4.7 K
R57	SM652101472	Res Chip (E24) 1% 4.7 K
R58	SM652101472	Res Chip (E24) 1% 4.7 K
R59	SM653101506	Res Chip 1% 15.0 K
R60	SM652101472	Res Chip (E24) 1% 4.7 K
R61	SM652101472	Res Chip (E24) 1% 4.7 K
R62	SM652101472	Res Chip (E24) 1% 4.7 K
R63	SM652101512	Res Chip (E24) 1% 5.1 K

Part #: 901851-00 Description: USB Hub Interface Board

Location	Part Number	Description
R65	SM654101000	Chip Jumper Zero Ohms
U20	SM275132907	Transistor Pnp 2907A
U22	SM275132907	Transistor Pnp 2907A
U25	SM227900002	IC 16-Bit Microcomputer USB
U26	SM310000002	Crystal Resonator 6MHz
U27	SM227470001	IC USB Hub Controller 1.1
U29	SM208580002	IC Reset M51957BFP
U30	SM232550001	SCR/Diode ESD \ OVP Array 6-Ch
U31	SM208550006	IC Volt Detector 4.5V TC54VC45
U32	SM334010001	IC USB Touch Screen Contoller
U33	SM270132222	Transistor Npn 2N2222A
U35	SM270132222	Transistor Npn 2N2222A
Y2	SM310716000	Crystal 16 MHz
Y3	SM311000010	Crystal Osc 6.0MHz 32pF

AVERY DENNISON

Office Products ©
Brea, California 92821

Durable Slant View 1"

Black #77711 08800
White #77711 08801

www.Avery.com

Product of US Origin with Foreign Components

MP MASTER
MA34441